for a greener tomorrow

MITSUBISHI ELECTRIC
Changes for the Better

FACTORY AUTOMATION

Low Voltage Circuit Breakers

〈General Catalog〉

World Super
WS-V Series

Molded Case Circuit Breakers and Earth Leakage Circuit Breakers

Empowering Industries

18 AA

INDEX

1

Introduction and Features of WS-V Series 2

1. Outline of Circuit Breakers 10

1) Product Line-up 10
2) Instructions for Application 12

2. Detailed Specifications 13

2

1 Molded Case Circuit Breakers 14

1) NF-C (Economy class) 14
2) NF-S (Standard class) 16
3) NF-L/NF-H/NF-R (High-performance class) 20
4) NF-U (Ultra current-limiting class) 23

2 Earth Leakage Circuit Breakers 24

1) NV-C (Economy class) 24
2) NV-S (Standard class) 26
3) NV-H/NV-R (High-performance class) 28

3

3 Motor Protection Breakers 30

1) NF-MB 30

4 UL 489 Listed Circuit Breakers 31

1) UL 489 Listed Molded Case Circuit Breakers 31
2) UL 489 Listed Earth Leakage Circuit Breakers 34

5 Measuring Display Unit Breakers 35

1) MDU Breakers 35

6 Miniature Circuit Breakers 44

1) BH 44
2) BHW 45
3) BVW, KBW 46

7 Circuit Protectors 49

1) CP 49

8 Low Voltage Air Circuit Breakers 52

1) Low Voltage Air Circuit Breakers (AE-SW Series) 52

9 Earth Leakage Relays 54

1) Earth Leakage Relays 54

4

3. Special-purpose Breakers 57

1) Mag Only (Instantaneous Tripping Circuit Breakers) 58
2) DC MCCBs and DSN Switches 58
3) 400Hz MCCBs 58

4. Selection 59

5

1 Construction and Operation 60

1) Construction of MCCB 60
2) Construction of ELCB 62

2 Selection of MCCB and ELCB 63

1) Selecting Procedure 63
2) Features and Performance 64
3) Current-carrying Capacity and Operating Temperature 66
4) Application of Circuit Breaker According to Breaking Capacity 68
5) Selection of Circuit Breaker for Electric Lamp or Heater Circuit 69
6) Selection of Circuit Breaker for Motor Branch Circuit 71
7) Selection of Motor Protection Breaker 73

6

8) Selection of Circuit Breaker for Inverter Circuit 74
9) Selection of Circuit Breaker for Transformer Primary Side 75
10) Combination for Selective Breaking 79
11) Combinations for Cascade Breaking 82
12) International Standard Conformance List 84

3 Selection of ELCB 87

1) Electric Shock Protection 87
2) ELCB Grounding Method 87
3) Rated Voltage and Number of Poles 88
4) Earth Fault Protection Coordination and Combination of Devices 89

5. Installation and Connection 91

7

1) Connection Types 92
2) Connecting Parts 94
3) Standard Tightening Torque 95
4) Crimp Terminal Type 96
5) Busbar 98
6) Insulation Distance on Power Source Side 99
7) Effect of Installation Orientation 100
8) Connection of Line and Load 100

6. Accessories 101

8

1 Internal Accessories 102

1) Internal Accessories 102
2) Kinds of Internal Accessories 103
3) Operations and Ratings of Switches 103
4) Maximum Number of Internal Accessories 104
5) Cassette Type Accessories 109
6) Shunt Trip (SHT) 111
7) Undervoltage Trip (UVT) 112
8) Lead Wire Drawing 114
9) Lead Wire Terminal Block 114
10) Test Button Module (TBM) 115
11) Pre-Alarm Module (PAL) 116

9

2 External Accessories 117

1) F-type Operating Handle (Breaker Mount Type) 117
2) V-type Operating Handle (Door Mount Type) 119
3) Terminal Covers 121
4) Insulating Barriers 124
5) Handle Lock Devices, Lock Covers, Auxiliary Handles, Card Holders 127
6) Mechanical Interlocks (MI) 129
7) Boxes for Circuit Breakers and Boxed Circuit Breakers 130
8) Electrical Operated Circuit Breakers and Electrical Operation Devices 133
9) Distribution Board Mounting Parts, Lock Covers and Handle Caps 136
10) IEC 35-mm Rail Mounting Adapters 137

7. Characteristics and Dimensions 139

1 Molded Case Circuit Breakers 140

- NF30-CS 140
- NF32-SV, NF63-CV/SV/HV 142
- NF125-CV/SV/HV 144
- NF125-SXV 146
- NF125-LXV/HXV 148
- NF125-UV 150
- NF250-CV/SV/HV 152
- NF250-SXV/LXV/HXV 154
- NF250-UV 156
- NF125-SGV/LGV/HGV/RGV, NF160-SGV/LGV/HGV, NF250-SGV/LGV/HGV/RGV 158
- NF125-SEV/HEV, NF250-SEV/HEV 160
- NF400-CW/SW 162
- NF400-SEW/HEW/REW 164
- NF400-UEW 166
- NF630-CW/SW 168
- NF630-SEW/HEW/REW 170
- NF800-CEW/SEW/HEW/REW 172
- NF800-SDW 174
- NF800-UEW 176
- NF1000-SEW, NF1250-SEW 178
- NF1250-SDW 180
- NF1600-SEW 182
- NF1600-SDW 184

2 Earth Leakage Circuit Breakers 186

- NV32-SV, NV-63CV/SV/HV 186
- NV125-CV/SV/HV 188
- NV250-CV/SV/HV 190
- NV125-SEV/HEV, NV250-SEV/HEV 192
- NV400-CW/SW 194
- NV400-SEW/HEW/REW 196
- NV630-CW/SW 198
- NV630-SEW/HEW 200
- NV800-SEW/HEW 202

3 UL 489 Listed Circuit Breakers 204

- NF50-SVFU, NV50-SVFU 204
- NF100-CVFU, NV100-CVFU 206
- NF125-SVU/HVU, NV125-SVU/HVU 208
- NF225-CWU 210
- NF250-SVU/HVU, NV250-SVU/HVU 212
- NF400-SWU/HWU 214
- NF630-SWU/HWU 216

4 Measuring Display Unit Breakers 218

- NF250-SEV/HEV with MDU 218
- NF400-SEP/HEP with MDU 220
- NF630-SEP/HEP with MDU, NF800-SEP/HEP with MDU 222

5 Miniature Circuit Breakers, Residual Current Circuit Breakers, Isolators 224

- BH,BH-P 224
- BHW-T10(0.5 to 63A) 225
- BHW-T10(80 to 125A) 226
- BVW-T 227
- KBW-T 228

6 Circuit Protectors 230

- CP30-BA 230

7 Electrical Operated Circuit Breakers 231

8. Handling and Maintenance 237

1) Storage and Transportation 238
2) Standard Working Conditions 238
3) Mounting and Connections 238
4) Maintenance and Inspections 240
5) Troubleshooting 242

9. Appendix 245

1) Handle Operation Angle Dimensions 246
2) MCCB Trip Button, Instantaneous Adjustment Dial Drilling and Terminal Cover Mounting Hole Dimensions 247
3) ELCB Button and Switch Dimensions 248
4) List of Product Weights 249
5) Switching the Adjustable Items 250
6) Breaker Mounting Screw Dimensions 253
7) List of Mold Surface Temperature-rise Values 254
8) Ordering Information 255
9) Melshort 2 257

Breaking Through

Since we, Mitsubishi Electric, launched the first low-voltage circuit breakers in Japan in 1933, low-voltage circuit breakers has satisfied the needs of the age and led the industry market for more than half a century all over the world.

By bringing together our years of experience and technologies, we would like to introduce "WS-V Series" circuit breakers with superior aspects such as the higher breaking capacity, design for easy use, standardization of accessory parts, compliance to the up to date international standards and so on.

We believe "WS-V Series" circuit breakers will fulfill every customer's needs with its high performance and we will continue to develop and manufacture superior products that contribute to a better life for all people.

The Industry

World Super

WS-V Series

High-Performance

Technologies based on long year experience are brought together to realize more improved performance

■ The new circuit breaking technology "Expanded ISTAC" has improved the current-limiting performance and upgraded the overall breaking capacity.
Expansion of the conductor under the stator shortens the contact parting time of the mover as compared to the conventional ISTAC structure.
The current-limiting performance has been improved remarkably. (The maximum peak current value has been reduced by approx. 10%.)

Example of breaking capacity improvement

Previous Model NF250-SW	→	New Model NF250-SV
50kA / 25kA (at 230VAC)		85kA / 85kA (at 230VAC)

New circuit breaking technology (Expanded ISTAC)

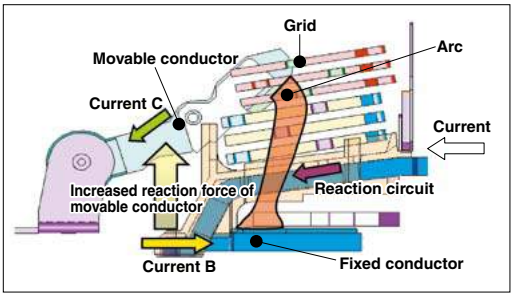

Breaking capacity of 5 models is 20% to 50% higher than the W & WS Series

■ Improvement of breaking capacity on 250AF-C/S/H models (Fixed) & 125.250AF-R models (Thermal/Adjustable).

■Breaking capacity comparison with a conventional model

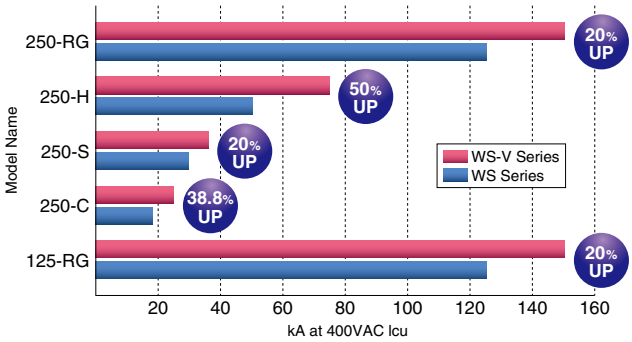

The new electronic circuit breakers (with display) and MDU breakers can display various measurement items

■ This will enable energy management through “visualization”, which leads to energy saving.

Electronic Circuit Breaker (with display)

Measuring Display Unit Breaker

- The display is on the circuit breaker body and shows circuit information.
- Detailed setting can be done on the display.
- The display turns red during alarms.

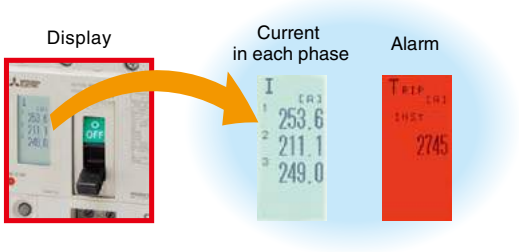

Intelligent Communications through CC-Link

■ Measuring data can be transmitted to Personal Computer through CC-Link.

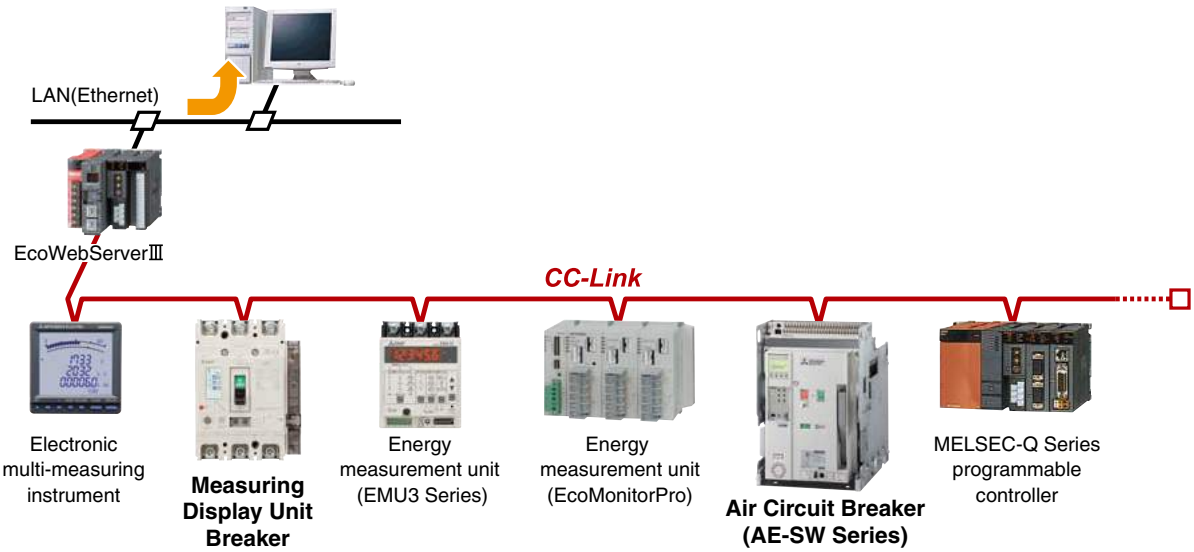

Standardization

Compact design for easy to use

■ The thermal adjustable circuit breakers and electronic circuit breakers are smaller.

NF250-SGW

(Conventional model : 105 × 165 × **86mm**)

NF250-SGV

(New model : 105 × 165 × **68mm**)

Volume ratio 79%
(Compared with our conventional models)

■ 250AF circuit breakers' fixed types (NF250-CV/SV/HV, NF250-SXV/LXV/HXV, NV250-CV, NV250-SV, NV250-HV), thermal adjustable types (NF250-SGV, NF250-HGV, NF250-RGV), and electronic types (NF250-SEV, NF250-HEV, NV250-SEV, NV250-HEV) are the same size, leading to the reduction and standardization of panel design.

Types of internal accessories are reduced from 3 types to 1 type

■ Standardization of internal accessories contributes to the reduction of stock and delivery time.

Conventional models — Three types
- For 32/63AF
- For 125AF
- For 250AF

New models — One type
- **For 32 to 250AF**

Applicable accessories
●AL ●AX ●AL+AX ●SHT ●UVT

■ 32AF and 63AF circuit breakers can now be used in both AC and DC circuits without specifying when ordering. This will lead to prevention of ordering mistakes.

■ The earth leakage circuit breakers can now be equipped with a voltage shunt trip device (SHT).

High Quality

Innovative manufacturing using a robot-cell production line

■ This manufacturing innovation takes the pursuit of increased productivity, shortened manufacturing lead-time and improved quality to the upper limits.

Robot-cell Production Line

Individual unit production management system

■ A multi-model, single-unit flow production system is utilized the ultimate multi-cycle production method. The production line is controlled using barcodes to manage the model information for each unit. Small-lot, flexible production that's one step ahead!

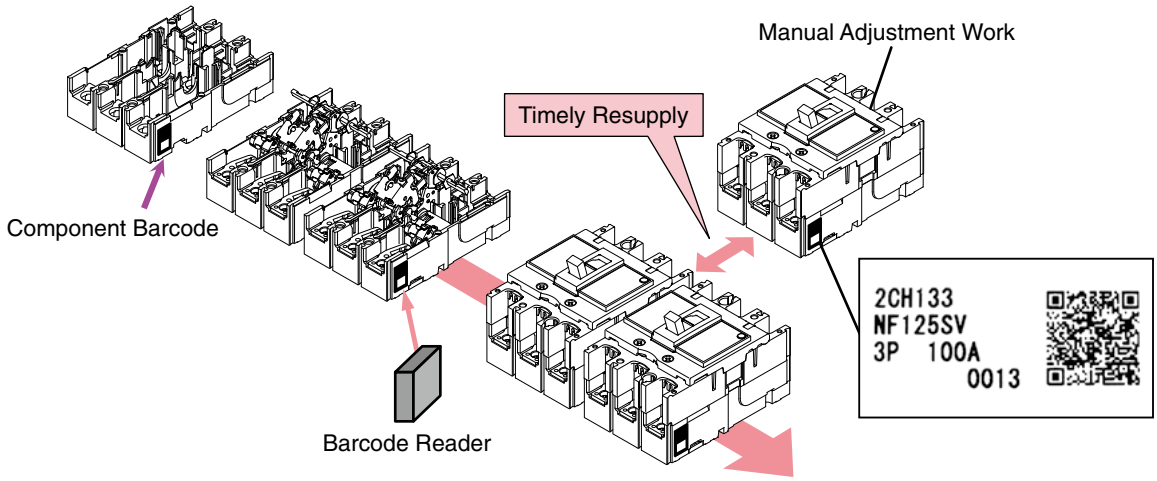

Environment

Use of Various Recyclable Materials

- The circuit breakers are made of thermo-plastic materials that are easy to recycle.
  (Some models are partially made of thermoset materials.)
  The major plastic parts bear material identifications so that they can be recycled.

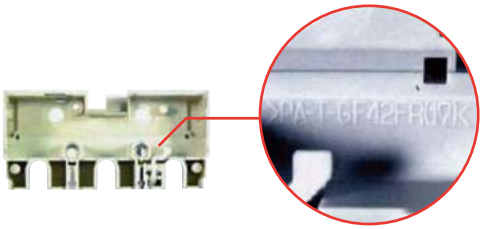

Nonuse of Hazardous Substances

- Eco-friendly design is used for all circuit breakers, and they do not use hazardous substances. The circuit breakers comply with RoHS regulation.

Energy Saving at Mitsubishi Electric Corporation Fukuyama Works

- Mitsubishi Electric Corporation Fukuyama Works uses energy saving support devices such as MDU breakers and EcoServer to save energy through “visualization” of energy. Along with “visualization”, Fukuyama Works also installed high-efficiency equipments to further promote energy saving.
  Through energy saving activity, Fukuyama Works has successfully reduced its electrical power consumption rate by 27% in 2007 (compared with 1990).

Global

Global Networks of Sales Offices and Production Bases

■ Our sales networks are designed to comfort customers internationally through the worldwide distributors. Constantly contactable distributors enable us to accommodate customer's needs for smooth supply.

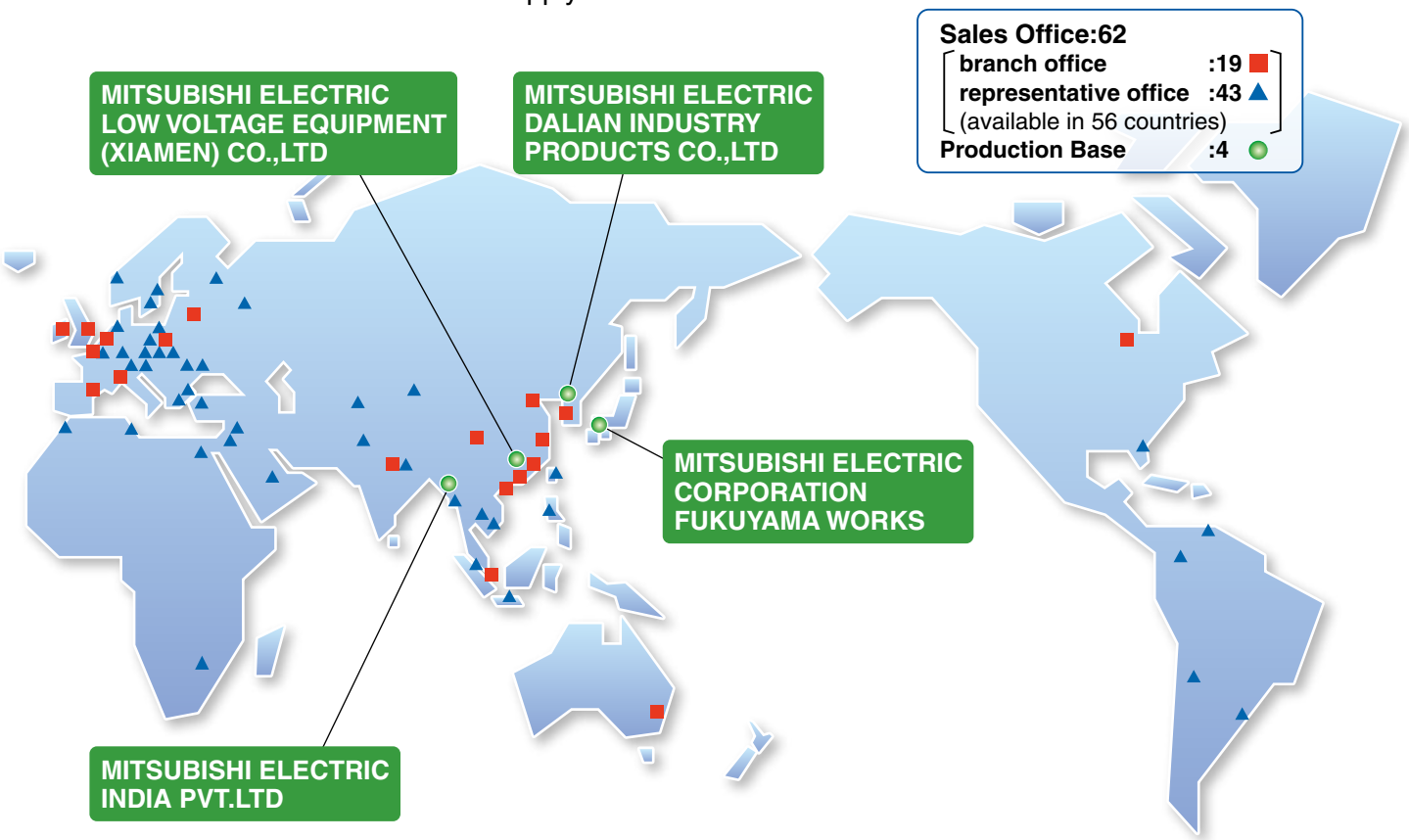

Product Line-up

Classification		Frame (A) 20 30 32	40 50 60 63	70 100 125	160
Molded Case Circuit Breakers	NF-C Economy class	NF30-CS	NF63-CV	NF125-CV	
	NF-S Standard class	NF32-SV	NF63-SV	NF125-SV NF125-SEV NF125-SXV NF125-SGV	NF160-SGV
	NF-L/H High-performance class		NF63-HV	NF125-LXV NF125-LGV NF125-HV NF125-HEV NF125-HXV NF125-HGV	NF160-LGV NF160-HGV
	NF-R/U Ultra current-limiting class			NF125-RGV NF125-UV	
Earth Leakage Circuit Breakers	NV-C Economy class		NV63-CV	NV125-CV	
	NV-S Standard class	NV32-SV	NV63-SV	NV125-SV NV125-SEV	
	NV-H/R High-performance class		NV63-HV	NV125-HV NV125-HEV	
Motor Protection Breakers	NF-MB	MB30-CS NF32-SV (*1)	NF63-CV (*1) NF63-SV (*1)	NF125-SV (*1)	
UL 489 Listed Circuit Breakers	UL 489 Listed MCCB		NF50-SVFU	NF100-CVFU NF125-SVU NF125-HVU	
	UL 489 Listed ELCB		NV50-SVFU	NV100-CVFU NV125-SVU NV125-HVU	
Measuring Display Unit Breakers	MDU Breakers				
Miniature Circuit Breakers		BHW-T10	BHW-T10	BHW-T10 BH BH-P	
Residual Current Circuit Breaker			BVW-T		
Isolators			KBW-T		
Circuit Protectors		CP30-BA CP-S			
Air Circuit Breakers	AE-SW				
Related Components	Earth Leakage Relays	NV-ZBA, NV-ZSA, NV-ZHA, NV-ZLA			

Note *1 When placing an order, specify "MB."

Molded Case Circuit Breakers					
NF-C	NF-S	NF-L	NF-H	NF-R	NF-U

Earth Leakage Circuit Breakers				Motor Protection Breakers
NV-C	NV-S	NV-H	NV-R	NF-MB

UL 489 Listed Circuit Breakers		Measuring Display Unit Breakers
UL 489 Listed MCCB	UL 489 Listed ELCB	MDU Breakers

225 250	400	600 630	800	1000	1250	1600	2000	2500	3200	4000	5000	6300
NF250-CV	NF400-CW	NF630-CW	NF800-CEW									
NF250-SV NF250-SEV NF250-SXV NF250-SGV	NF400-SW NF400-SEW	NF630-SW NF630-SEW	NF800-SDW NF800-SEW	NF1000-SEW	NF1250-SDW NF1250-SEW	NF1600-SDW NF1600-SEW						
NF250-LXV NF250-LGV NF250-HV NF250-HEV NF250-HXV NF250-HGV	NF400-HEW	NF630-HEW	NF800-HEW									
NF250-RGV NF250-UV	NF400-REW NF400-UEW	NF630-REW	NF800-REW NF800-UEW									
NV250-CV	NV400-CW	NV630-CW										
NV250-SV NV250-SEV	NV400-SW NV400-SEW	NV630-SW NV630-SEW	NV800-SEW									
NV250-HV NV250-HEV	NV400-HEW NV400-REW	NV630-HEW	NV800-HEW									
NF250-SV (*1)												
NF225-CWU NF250-SVU NF250-HVU	NF400-SWU NF400-HWU	NF630-SWU NF630-HWU										
NV250-SVU NV250-HVU												
NF250-SEV with MDU NF250-HEV with MDU	NF400-SEP with MDU NF400-HEP with MDU	NF630-SEP with MDU NF630-HEP with MDU	NF800-SEP with MDU NF800-HEP with MDU									
		AE630-SW		AE1000-SW	AE1250-SW	AE1600-SW	AE2000-SW AE2000-SWA	AE2500-SW	AE3200-SW	AE4000-SWA AE4000-SW	AE5000-SW	AE6300-SW

Miniature Circuit Breakers			
BHW-T10 (0.5 to 63A)	BHW-T10 (80 to 125A)	BH	BH-P

Residual Current Circuit Breaker	Isolators
BVW-T	KBW-T

Circuit Protectors		Air Circuit Breakers	Related Components
CP30-BA	CP-S	AE-SW	Earth Leakage Relays

Instructions for Application

1. Safety Precautions

- Carefully read the safety precautions prior to use the circuit breaker correctly.
- Important safety instructions are given below. Strictly observe the instructions.
- Be sure to communicate these safety precautions to the end user.

[Explanation of warning symbols]

⚠ DANGER	Incorrect handling of the product will result in a hazardous situation, such as death or serious injury.
⚠ CAUTION	Incorrect handling of the product may result in a hazardous situation according to circumstances.

⚠ DANGER

- Do not touch the terminal area. Doing so can cause an electric shock.
- The earth leakage circuit breakers are designed to operate when the difference between leaving current and returning current exceeds the specified value. In the case shown in this figure, earth leakage is not detected. Therefore, never touch the two bare live parts. The circuit breaker will not operate upon occurrence of an electric shock.

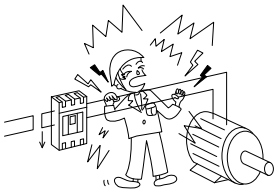

Earth leakage circuit breaker

Instructions for installation

⚠ CAUTION

- The electrical work shall be performed by qualified personnel (electrical workers).
- Before performing wiring work, turn off the upstream circuit breaker, and ensure that no current is flowing through the circuit breaker to be wired. Failure to do so may expose you to shock hazard.
- When connecting any wire, tighten the terminal screw to the torque specified in the instruction manual. Failure to do so may cause a fire.
- When the model comes with insulating barriers as standard accessories, install the insulating barriers without fail.
- Do not install the circuit breaker in an abnormal environment with high temperature, high moisture, dust, corrosive gas, vibration or shock. Doing so may cause a fire or make the circuit breaker inoperative.
- Protect the circuit breaker so that foreign particles, such as dust, concrete powder and iron powder, and rain water will not enter the circuit breaker.
  Failure to do so may make the circuit breaker inoperative.

[Earth leakage circuit breaker]

- When using an earth leakage circuit breaker for use only in single-phase 3-wire or 3-phase 4-wire systems, connect the neutral wire to the neutral phase without fail. If they are not connected, the circuit breaker may not operate in the case of open phase or overcurrent, thereby resulting in a fire.
- Connect the circuit breaker to a power supply appropriate to the rating of its body.
  Failure to do so may make the circuit breaker inoperative or damage it.
- Tighten securely the lead wire in the open phase to the neutral wire on the load side.
  If the wires are not connected, the open phase of the neutral wire cannot be detected.
- When there are two terminal screws for the neutral pole, tighten the screws alternately. Failure to do so may loosen the screws, thereby causing a fire.

Instructions for use

⚠ CAUTION

- When the circuit breaker automatically breaks a circuit, turn on the handle after removing the cause. Failure to do so may cause an electric shock or a fire.

[Earth leakage circuit breaker]

- Ground the earth terminal of electrical equipment.
  Failure to do so may cause an electric shock or a fire.
- Press the test button to check the operation once a month or so. If the earth leakage circuit breaker is not turned off, it is out of order.
  Consult an electrician.

Instructions for maintenance

⚠ CAUTION

- The circuit breakers shall be maintained by persons with specialized knowledge.
- Before maintaining, turn off the upstream circuit breaker, and ensure that no current is flowing through the circuit breaker to be maintained.
  Failure to do so may expose you to shock hazard.
- Retighten the terminals periodically.
  Failure to do so may cause a fire.

Instructions for disposal

⚠ CAUTION

- When disposing of the product, treat it as industrial waste.

2. Instructions for Application

(1) Please note that the specifications for the products in this catalog are subject to change without prior notice.

(2) The products in this catalog are designed and manufactured as general-purpose products for general industrial uses. If you intend to use them for a special purpose, such as nuclear power, electric power, aerospace, medical or passenger vehicle equipment or systems, please contact our sales representative.

(3) We are not responsible for compensation for damage caused by any reason not attributable to us, opportunity loss or lost earnings of customer caused by trouble of our product, damage, secondary damage, accidents or damage to any product other than our product caused by special circumstances or any other operation.

2

Detailed Specifications

1 Molded Case Circuit Breakers 14

1) NF-C (Economy class) 14
2) NF-S (Standard class) 16
3) NF-L/NF-H/NF-R (High-performance class) 20
4) NF-U (Ultra current-limiting class) 23

2 Earth Leakage Circuit Breakers 24

1) NV-C (Economy class) 24
2) NV-S (Standard class) 26
3) NV-H/NV-R (High-performance class) 28

3 Motor Protection Breakers 30

1) NF-MB 30

4 UL 489 Listed Circuit Breakers 31

1) UL 489 Listed Molded Case Circuit Breakers 31
2) UL 489 Listed Earth Leakage Circuit Breakers 34

5 Measuring Display Unit Breakers 35

1) MDU Breakers 35

6 Miniature Circuit Breakers 44

1) BH 44
2) BHW 45
3) BVW, KBW 46

7 Circuit Protectors 49

1) CP 49

8 Low Voltage Air Circuit Breakers 52

1) Low Voltage Air Circuit Breakers (AE-SW Series) 52

9 Earth Leakage Relays 54

1) Earth Leakage Relays 54

NF-C (Economy class)

Frame (A)	30	50	60	63	100	125
Model	NF30-CS	NF63-CV			NF125-CV	
Image						
Rated current In (A) Rated ambient temperture 40°C (45°C for marine use)	3 5 10 15 20 30	3 4 (5) 6 10 (15) 16 20 25 (30) 32 40 50	(60)	63	50 (60) 63 (75) 80 100	125
Number of poles	2 / 3	2 / 3	2 / 3	2 / 3	2 / 3	2 / 3
Rated insulation voltage Ui (V)	500	600	600	600	600	600
Rated short-circuit breaking capacities (kA) — IEC 60947-2 EN 60947-2 (Icu/Ics) — AC 690V	–	–	–	–	–	–
AC 500V	–	2.5/2.5	2.5/2.5	2.5/2.5	7.5/4	7.5/4
AC 440V	–	2.5/2.5	2.5/2.5	2.5/2.5	10/5	10/5
AC 415V	1.5/1.5	2.5/2.5	2.5/2.5	2.5/2.5	10/5	10/5
AC 400V	1.5/1.5	5/5	5/5	5/5	10/5	10/5
AC 380V	1.5/1.5	5/5	5/5	5/5	10/5	10/5
AC 230V	2.5/2 (240V)	7.5/7.5	7.5/7.5	7.5/7.5	30/15	30/15
AC 200V	2.5/2 (240V)	7.5/7.5	7.5/7.5	7.5/7.5	30/15	30/15
DC 250V	–	2.5/2.5 (*7)	2.5/2.5 (*7)	2.5/2.5 (*7)	7.5/4 (*4)	7.5/4 (*4)
Rated impulse withstand voltage Uimp (kV)	4	8	8	8	8	8
Current (*1)	AC	AC/DC compatible	AC/DC compatible	AC/DC compatible	AC/DC compatible	AC/DC compatible
Suitability for isolation	–	Compatible	Compatible	Compatible	Compatible	Compatible
Reverse connection	–	Possible	Possible	Possible	Possible	Possible
Number of operating cycles — Without current	10,000	10,000	10,000	10,000	10,000	10,000
Number of operating cycles — With current (440VAC)	6,000 (AC415V)	6,000	6,000	6,000	6,000	6,000
Utilization category	A	A	A	A	A	A
Pollution degree	2	3	3	3	3	3
EMC environment condition (environment A or B)	N/A	N/A	N/A	N/A	N/A	N/A
Overall dimensions (mm) — a	45 / 67.5	50 / 75	50 / 75	50 / 75	60 / 90	60 / 90
Overall dimensions (mm) — b	96	130	130	130	130	130
Overall dimensions (mm) — c	52	68	68	68	68	68
Overall dimensions (mm) — ca	67	90	90	90	90	90
Mass of front-face type (kg)	0.25 / 0.35	0.45 / 0.65	0.5 / 0.7	0.5 / 0.7	0.6 / 0.9	0.6 / 0.9
Installation and connections — Front connection (F) — Page	●Screw terminal	●Screw terminal	●Screw terminal	●Screw terminal	●Screw terminal	●Screw terminal
Solderless (BOX) terminal (SL) — 92	–	–	–	–	●	●
Rear (B) — 92	●Round stud (assembled in)	●Round stud	●Round stud	●Round stud	●Bar stud	●Bar stud
Plug-in (PM) — 92	–	●	●	●	●	●
Cassette-type accessories — Alarm switch (AL) — 102	● (*5)	● (*6)	● (*6)	● (*6)	● (*6)	●(*6)
Auxiliary switch (AX) — 102	●(*5)	● (*6)	● (*6)	● (*6)	● (*6)	●(*6)
Shunt trip (SHT) — 102	–	● (*6)	● (*6)	● (*6)	● (*6)	●(*6)
Undervoltage trip (UVT) — 102	–	● (*6)	● (*6)	● (*6)	● (*6)	●(*6)
With lead-wire terminal block (SLT) — 114	●	●	●	●	●	●
Pre-alarm (PAL) — 116	–	–	–	–	–	–
External accessories — Enclosure — Closed (S) — 130	●	●	●	●	●	●
Enclosure — Dustproof (I) — 130	–	●	●	●	●	●
Enclosure — Waterproof (W) — 130	–	– / ●	– / ●	– / ●	– / ●	– / ●
Electrical operation device (NFM) — 133	–	–	–	–	– / ●	– / ●
Mechanical interlock (MI) (*10) — Panel mounting — 129	–	●	●	●	●	●
Mechanical interlock (MI) (*10) — Breaker mounting — 129	–	●	●	●	●	●
Handle lock device — LC — 127	●	●	●	●	●	●
Handle lock device — HL — 127	●	●	●	●	●	●
Handle lock device — HL-S — 127	–	●	●	●	●	●
External operating handle (F) — 117	–	●	●	●	●	●
External operating handle (V) — 117	–	●	●	●	●	●
Terminal cover (TC-L, TC-S, TTC, BTC, PTC) — 121	●	●	●	●	●	●
Rear stud (B-ST) — 94	–	●	●	●	●	●
Plug-in (PM) — 94	–	●	●	●	●	●
IEC 35mm rail mounting adapters — 137	●	●	●	●	–	–
CE marking	TÜV approval	Self-declaration	Self-declaration	Self-declaration	Self-declaration	Self-declaration
CCC recognition	Recognized	Recognized	Recognized	Recognized	Recognized	Recognized
Marine use approval (NK, LR, ABS, GL)	☆ (NK, LR, ABS)	☆	☆	☆	☆	☆
Automatic tripping device	Hydraulic magnetic	Thermal-magnetic	Thermal-magnetic	Thermal-magnetic	Thermal-magnetic	Thermal-magnetic
Trip button	– (*2)	Equipped	Equipped	Equipped	Equipped	Equipped
Page of Characteristics and dimensions	140	142			144	

Notes:
*1 The trip action characteristics differ between AC and DC for products that are compatible with both AC and DC.
*2 It is attached with the alarm switch.
*3 In case of a current rating of 100A, it does not specify NK rating.
*4 Use two poles for three- and four-pole products. In this case, do not use the neutral pole of the four-pole products. If wired as shown on the right, three and four poles can be used for up to 400 and 500VDC, respectively.
*5 The standard lead drawing is performd laterally. Load drawing is also available.
*6 The cassette type design makes it easy for customer to install. Available for installation on side below 250A frame (excluding UVT).
*7 Use two poles for three- and four-pole products. In this case, do not use the neutral pole of the four-pole products. Not available for use with connection as shown on the right.
*8 Place an order of other models in conjunction with the circuit breaker.
*9 Solid state relay output is option. Please specify if other output is necessary. (Standard type is thus SLT equipped).
*10 Not isolation compatible, excluding 400 to 800A frame.

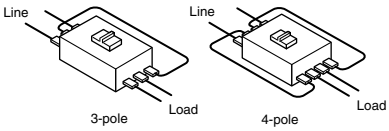

NF-C (Economy class)

225	250	400	600	630	800
NF250-CV		NF400-CW	NF630-CW		NF800-CEW
(100) 125 150 175 200 225 (*3)	250	250 300 350 400	500 600	630	Adjustable 400 450 500 600 700 800
2 / 3	2 / 3	2 / 3	2 / 3	2 / 3	3
600	600	690	690	690	690
–	–	–	–	–	–
10/8	10/8	15/8	18/9	18/9	18/9
15/12	15/12	25/13	36/18	36/18	36/18
25/19	25/19	36/18	36/18	36/18	36/18
25/19	25/19	36/18	36/18	36/18	36/18
25/19	25/19	40/20	40/20	40/20	40/20
36/27	36/27	50/25	50/25	50/25	50/25
36/27	36/27	50/25	50/25	50/25	50/25
15/12 (*4)	15/12 (*4)	20/10 (*4)	20/10 (*4)	20/10 (*4)	–
8	8	8	8	8	8
AC/DC compatible	AC/DC compatible	AC/DC compatible	AC/DC compatible	AC/DC compatible	AC
Compatible	Compatible	Compatible	Compatible	Compatible	Compatible
Possible	Possible	Possible	Possible	Possible	Possible
8,000	8,000	6,000	6,000	6,000	4,000
4,000	4,000	1,000	1,000	1,000	500
A	A	A	A	A	B
3	3	3	3	3	3
N/A	N/A	N/A	N/A	N/A	A
105	105	140	140	140	210
165	165	257	257	257	275
68	68	103	103	103	103
92	92	134	134	134	155
1.3 / 1.5	1.3 / 1.5	4.4 / 5.0	5.2 / 6.0	5.2 / 6.0	10.9
●Screw terminal	●Screw terminal	●Busbar terminal	●Busbar terminal	●Busbar terminal	●Busbar terminal
●	●	–	–	–	–
●Bar stud	●Bar stud	●Bar stud	●Bar stud	●Bar stud	●Bar stud
●	●	●	●	●	●
●(*6)	●(*6)	●(*6)	●(*6)	●(*6)	●(*6)
●(*6)	●(*6)	●(*6)	●(*6)	●(*6)	●(*6)
●(*6)	●(*6)	●(*6)	●(*6)	●(*6)	●(*6)
●(*6)	●(*6)	●	●	●	●
●	●	●	●	●	●
–	–	–	–	–	●(*9)
●	●	–	–	–	–
●	●	●	●	●	●
– / ●	– / ●	●	●	●	●
●	●	●(*8)	●(*8)	●(*8)	●(*8)
●	●	●	●	●	●
●	●	●	●	●	●
●	●	–	–	–	–
●	●	●	●	●	●
●	●	●	●	●	●
●	●	●	●	●	●
●	●	●	●	●	●
●	●	●	●	●	●
●	●	● / ●	● / ●	● / ●	●
●	●	●	● / ●	● / ●	●
–	–	–	–	–	–
TÜV approval	TÜV approval	Self-declaration	Self-declaration	Self-declaration	Self-declaration
Recognized	Recognized	Recognized	Recognized	Recognized	Recognized
☆	☆	☆	☆	☆	☆
Thermal-magnetic	Thermal-magnetic	Thermal-magnetic	Thermal-magnetic	Thermal-magnetic	Electronic (effective value detection)
Equipped	Equipped	Equipped	Equipped	Equipped	Equipped
152		162	168		172

Remarks: 1. Products with rated current parenthesized are produced when an order is placed.
2. Specify "P-LT" when using a plug-in product with a lead-wire terminal block.
3. The circuit breaker has the rated short-circuit breaking capacity specified in the shaded cells.

NF-S (Standard class)

Frame (A)				30		32		50			60			63		
Model				NF32-SV				NF63-SV								
Image																
Rated current In (A) Rated ambient temperture 40°C (45°C for marine use)				3 4 (5) 6 10 15 16 20 25 (30)		32		3 4 (5) 6 10 (15) 16 20 25 (30) 32 40 50			(60)			63		
Number of poles				2	3	2	3	2	3	4	2	3	4	2	3	4
Rated insulation voltage Ui (V)				600		600		600			600			600		
Rated short-circuit breaking capacities (kA)	IEC 60947-2 EN 60947-2 (Icu/Ics)	AC	690V	–		–		–			–			–		
			500V	2.5/2.5		2.5/2.5		7.5/7.5			7.5/7.5			7.5/7.5		
			440V	2.5/2.5		2.5/2.5		7.5/7.5			7.5/7.5			7.5/7.5		
			415V	2.5/2.5		2.5/2.5		7.5/7.5			7.5/7.5			7.5/7.5		
			400V	5/5		5/5		7.5/7.5			7.5/7.5			7.5/7.5		
			380V	5/5		5/5		7.5/7.5			7.5/7.5			7.5/7.5		
			230V	7.5/7.5		7.5/7.5		15/15			15/15			15/15		
			200V	7.5/7.5		7.5/7.5		15/15			15/15			15/15		
		DC	250V	2.5/2.5 (*5)		2.5/2.5 (*5)		7.5/7.5 (*5)			7.5/7.5 (*5)			7.5/7.5 (*5)		
Rated impulse withstand voltage Uimp (kV)				8		8		8			8			8		
Current (*1)				AC/DC compatible		AC/DC compatible		AC/DC compatible			AC/DC compatible			AC/DC compatible		
Suitability for isolation				Compatible		Compatible		Compatible			Compatible			Compatible		
Reverse connection				Possible		Possible		Possible			Possible			Possible		
Number of operating cycles	Without current			10,000		10,000		10,000			15,000			15,000		
	With current (440VAC)			6,000		6,000		6,000			8,000			8,000		
Utilization category				A		A		A			A			A		
Pollution degree				3		3		3			3			3		
EMC environment condition (environment A or B)				N/A		N/A		N/A			N/A			N/A		
Overall dimensions (mm)			a	50	75	50	75	50	75	100	50	75	100	50	75	100
			b	130		130		130			130			130		
			c	68		68		68			68			68		
			ca	90		90		90			90			90		
Mass of front-face type (kg)				0.45	0.65	0.45	0.65	0.5	0.7	0.9	0.55	0.75	1.0	0.55	0.75	1.0
Installation and connections	Front connection (F)		Page	●Screw terminal		●Screw terminal		●Screw terminal			●Screw terminal			●Screw terminal		
	Solderless (BOX) terminal (SL)		92	–		–		–			–			–		
	Rear (B)			●Bar stud		●Round stud		●Round stud			●Round stud			●Round stud		
	Plug-in (PM)			●		●		●			●			●		
Cassette-type accessories	Alarm switch (AL)		102	● (*4)		● (*4)		● (*4)		●	● (*4)		●	● (*4)		●
	Auxiliary switch (AX)			● (*4)		● (*4)		● (*4)		●	● (*4)		●	● (*4)		●
	Shunt trip (SHT)			● (*4)		● (*4)		● (*4)		●	● (*4)		●	● (*4)		●
	Undervoltage trip (UVT)			● (*4)		● (*4)		● (*4)		●	● (*4)		●	● (*4)		●
	With lead-wire terminal block (SLT)		114	●		●		●		●	●		●	●		●
	Pre-alarm (PAL)		116	–		–		–			–			–		
External accessories	Enclosure	Closed (S)	130	●		●		●		–	●		–	●		–
		Dustproof (I)		●		●		●		–	●		–	●		–
		Waterproof (W)		–	●	–	●	–	●	–	–	●	–	–	●	–
	Electrical operation device (NFM)		133	–		–		–			–			–		
	Mechanical interlock (MI) (*7)	Panel mounting	129	●		●		●		●	●		●	●		●
		Breaker mounting		●		●		●		–	●		–	●		–
	Handle lock device	LC	127	●		●		●			●			●		
		HL		●		●		●			●			●		
		HL-S		●		●		●			●			●		
	External operating handle	(F)	117	●		●		●			●			●		
		(V)		●		●		●			●			●		
	Terminal cover (TC-L, TC-S, TTC, BTC, PTC)		121	●		●		●		●	●		●	●		●
	Rear stud (B-ST)		94	●		●		●			●			●		
	Plug-in (PM)			●		●		●		●	●		●	●		●
	IEC 35mm rail mounting adapters		137	●		●		●		–	●		–	●		–
CE marking				Self-declaration		Self-declaration		Self-declaration			Self-declaration			Self-declaration		
CCC recognition				Recognized		Recognized		Recognized			Recognized			Recognized		
Marine use approval (NK, LR, ABS, GL)				☆		☆		☆		–	☆		–	☆		–
Automatic tripping device				Thermal-magnetic		Thermal-magnetic		Thermal-magnetic			Thermal-magnetic			Thermal-magnetic		
Trip button				Equipped		Equipped		Equipped			Equipped			Equipped		
Page of Characteristics and dimensions				142				142								

Notes:
*1 The trip action characteristics differ between AC and DC for products that are compatible with both AC and DC.
*2 In case of a current rating of 100A, it does not specify NK rating.
*3 Use two poles for three- and four-pole products. In this case, do not use the neutral pole of the four-pole products. If wired as shown on the right, three and four poles can be used for up to 400 and 500VDC, respectively. (In case of NF250-SV, three and four poles can be used for up to 500 and 600VDC)
*4 The cassette type design makes it easy for customer to install. Available for installation on side below 250A frame (excluding UVT).
*5 Use two poles for three- and four-pole products. In this case, do not use the neutral pole of the four-pole products. Not available for use with connection as shown on the right.
*6 Place an order of other models in conjunction with the circuit breaker.
*7 Not isolation compatible. excluding 400 to 800A frame.

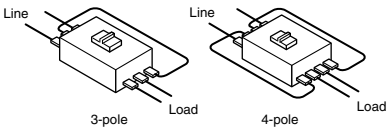

NF-S (Standard class)

	125			125 NEW			125			125		160			250		
	NF125-SV			NF125-SXV			NF125-SGV			NF125-SEV		NF160-SGV			NF250-SV		
	(15) 16 20 (30) 32 40 50 (60) 63 (75) 80 100 125			(15) 16 20 (30) 32 40 50 (60) 63 (75) 80 100 125			16-20 20-25 25-32 32-40 35-40-50 45-50-63 56-63-80 70-80-100 90-100-125			16-32 32-63 63-125		125-160			(100) 125 150 160 175 200 225 (*2) 250		
	2	3	4	2	3	4	2	3	4	3	4	2	3	4	2	3	4
	690			690			690			690		690			690		
	8/8			8/8			8/8			8/8		8/8			8/8		
	18/18			23/23			30/30			30/30		30/30			30/30		
	25/25			36/36			36/36			36/36		36/36			36/36		
	30/30			36/36			36/36			36/36		36/36			36/36		
	30/30			36/36			36/36			36/36		36/36			36/36		
	30/30			36/36			36/36			36/36		36/36			36/36		
	50/50			75/75			85/85			85/85		85/85			85/85		
	50/50			75/75			85/85			85/85		85/85			85/85		
	40/40 (*3)			–			20/20 (300V) (*3)			–		20/20 (300V) (*3)			20/20 (300V) (*3)		
	8			8			8			8		8			8		
	AC/DC compatible			AC			AC/DC compatible			AC		AC/DC compatible			AC/DC compatible		
	Compatible			Compatible			Compatible			Compatible		Compatible			Compatible		
	Possible			Possible			Possible			Possible		Possible			Possible		
	25,000			25,000			50,000			25,000		40,000			25,000		
	10,000			10,000			30,000			10,000		15,000			10,000		
	A			A			A			A		A			A		
	3			3			3			3		3			3		
	N/A			N/A			N/A			A		N/A			N/A		
	60	90	120	90		120	105		140	105	140	105		140	105		140
	130			130			165			165		165			165		
	68			68			68			68		68			68		
	90			90			92			92		92			92		
	0.7	1.0	1.3	0.6	1.0	1.2	1.4	1.6	2.0	1.7	2.2	1.4	1.6	2.0	1.4	1.6	2.0
	●Screw terminal			●Screw terminal			●Screw terminal			●Screw terminal		●Screw terminal			●Screw terminal		
	●			●			●			●	●	●			●		●
	●Bar stud			●Bar stud			●Bar stud			●Bar stud	●Bar stud	●Bar stud			●Bar stud		
	●		●	●		●	●			●	●	●			●		●
	● (*4)		●	● (*4)		●	● (*4)		●	● (*4)	●	● (*4)		●	● (*4)		●
	● (*4)		●	● (*4)		●	● (*4)		●	● (*4)	●	● (*4)		●	● (*4)		●
	● (*4)		●	● (*4)		●	● (*4)		●	● (*4)	●	● (*4)		●	● (*4)		●
	● (*4)		●	● (*4)		●	● (*4)		●	● (*4)	●	● (*4)		●	● (*4)		●
	●		●	●		●	●			●	●	●			●		●
	–			–			–			●		–			–		
	●		–	●		–	●		–	●	–	●		–	●		–
	●		–	●		–	●		–	●	–	●		–	●		–
	–	●	–	●		–	●		–	●	–	●		–	●		–
	–	●		●			●			●		●			●		
	●		●	●		●	●			●	●	●			●		●
	●		–	●		–	●			●	–	●			●		–
	●			●			●			●		●			●		
	●			●			●			●		●			●		
	●			●			●			●		●			●		
	●			●			●			●		●			●		
	–	●	●	●			●			●		●			●		
	●		●	●		●	●			●	●	●			●		●
	●		●	●		●	●			●	●	●			●		●
	●		●	●		●	●			●	●	●			●		●
	–			–			–			–		–			–		
	Self-declaration			Self-declaration			Self-declaration			Self-declaration		Self-declaration			TÜV approval		Self-declaration
	Recognized			Recognized			Recognized			Recognized		Recognized			Recognized		
	☆		–	☆ (LR, ABS, GL)		–	☆ (LR, ABS, GL)		–	☆ (LR, ABS, GL)	–	☆ (LR, ABS, GL)		–	☆		–
	Thermal-magnetic			Thermal-magnetic			Thermal-magnetic			Electronic (effective value detection)		Thermal-magnetic			Thermal-magnetic		
	Equipped			Equipped			Equipped			Equipped		Equipped			Equipped		
	144			146			158			160		158			152		

Remarks: 1. Products with rated current parenthesized are produced when an order is placed.
2. Specify "P-LT" when using a plug-in product with a lead-wire terminal block.
3. The circuit breaker has the rated short-circuit breaking capacity specified in the shaded cells.

NF-S (Standard class)

Frame (A)	250 NEW			250			250		400			400		630		
Model	NF250-SXV			NF250-SGV			NF250-SEV		NF400-SW			NF400-SEW		NF630-SW		
Image																
Rated current In (A) Rated ambient temperture 40°C (45°C for marine use)	(100) 125 150 175 200 225 250			125-160 140-160-200 175-200-250			80-160 125-250		250 300 350 400			Adjustable 200 225 250 300 350 400		500 600 630		
Number of poles	2	3	4	2	3	4	3	4	2	3	4	3	4	2	3	4
Rated insulation voltage Ui (V)	690			690			690		690			690		690		
Rated short-circuit breaking capacities (kA) — IEC 60947-2 EN 60947-2 (Icu/Ics) — AC 690V	8/8			8/8			8/8		10/10			10/10		10/10		
AC 500V	30/30			30/30			30/30		30/30			30/30		30/30		
AC 440V	36/36			36/36			36/36		42/42			42/42		42/42		
AC 415V	36/36			36/36			36/36		45/45			50/50		50/50		
AC 400V	36/36			36/36			36/36		45/45			50/50		50/50		
AC 380V	36/36			36/36			36/36		50/50			50/50		50/50		
AC 230V	85/85			85/85			85/85		85/85			85/85		85/85		
AC 200V	85/85			85/85			85/85		85/85			85/85		85/85		
DC 250V	20/20 (*2)			20/20 (300V) (*2)			–		40/40 (*2)			–		40/40 (*2)		
Rated impulse withstand voltage Uimp (kV)	8			8			8		8			8		8		
Current	AC/DC compatible (*1)			AC/DC compatible (*1)			AC		AC/DC compatible			AC		AC/DC compatible		
Suitability for isolation	Compatible			Compatible			Compatible		Compatible			Compatible		Compatible		
Reverse connection	Possible			Possible			Possible		Possible			Possible		Possible		
Number of operating cycles — Without current	25,000			25,000			25,000		6,000			6,000		6,000		
Number of operating cycles — With current (440VAC)	10,000			10,000			10,000		1,000			1,000		1,000		
Utilization category	A			A			A		A			B		A		
Rated short time with stand current Icw (kA) at 0.25s	–			–			–		–			5		–		
Pollution degree	3			3			3		3			3		3		
EMC environment condition (environment A or B)	N/A			N/A			A		N/A			A		N/A		
Overall dimensions (mm) — a	105		140	105		140	105	140	140		185	140	185	140		185
Overall dimensions (mm) — b	165			165			165		257			257		257		
Overall dimensions (mm) — c	68			68			68		103			103		103		
Overall dimensions (mm) — ca	92			92			92		155			155		155		
Mass of front-face type (kg)	1.4	1.6	2.0	1.4	1.6	2.0	1.7	2.2	4.6	5.2	6.8	6.0	7.6	5.4	6.2	8.0
Installation and connections — Page																
Front connection (F)	●Screw terminal			●			●Screw terminal	●Screw terminal	●Busbar terminal			●Busbar terminal		●Busbar terminal		
Solderless (BOX) terminal (SL)	●			●			●	●	–	–	–	–	–	–	–	–
Rear (B)	●Bar stud			●Bar stud			●Bar stud	●Bar stud	●Bar stud	●Bar stud	●Bar stud	●Bar stud	●Bar stud	●Bar stud	●Bar stud	●Bar stud
Plug-in (PM)	●		●	●		●	●	●	●		●	●	●	●		●
Cassette-type accessories — Alarm switch (AL)	● (*3)		●	● (*3)		●	● (*3)	●	● (*3)		●	● (*3)	●	● (*3)		●
Auxiliary switch (AX)	● (*3)		●	● (*3)		●	● (*3)	●	● (*3)		●	● (*3)	●	● (*3)		●
Shunt trip (SHT)	● (*3)		●	● (*3)		●	● (*3)	●	● (*3)		●	● (*3)	●	● (*3)		●
Undervoltage trip (UVT)	● (*3)		●	● (*3)		●	● (*3)	●	●		●	●	●	●		●
With lead-wire terminal block (SLT)	●		●	●			●	●	●		●	●	●	●		●
Pre-alarm (PAL)	–			–			●		–			● (*5)		–		
External accessories — Enclosure — Closed (S)	●		–	●		–	●	–	–			–		–		
Enclosure — Dustproof (I)	●		–	●		–	●	–	●		–	●	–	●		–
Enclosure — Waterproof (W)	●		–	●		–	●	–	●		–	●	–	●		–
Electrical operation device (NFM)	●			●			●		● (*6)			● (*6)		● (*6)		
Mechanical interlock (MI) (*7) — Panel mounting	●		●	●			●	●	●		●	●	●	●		●
Mechanical interlock (MI) (*7) — Breaker mounting	●		–	●			●	–	●		–	●	–	●		–
Handle lock device — LC	●			●			●		–			–		–		
Handle lock device — HL	●			●			●		●			●		●		
Handle lock device — HL-S	●			●			●		●			●		●		
External operating handle (F)	●			●			●		●			●		●		
External operating handle (V)	●			●			●		●			●		●		
Terminal cover (TC-L, TC-S, TTC, BTC, PTC)	●		●	●			●	●	●		●	●	●	●		●
Rear stud (B-ST)	●		●	●			●	●	●	●		●		●	●	●
Plug-in (PM)	●		●	●			●	●	●	●	●	●	●	●	●	●
IEC 35mm rail mounting adapters	–			–			–		–			–		–		
CE marking	Self-declaration			Self-declaration			Self-declaration		Self-declaration			Self-declaration		Self-declaration		
CCC recognition	Recognized			Recognized			Recognized		Recognized			Recognized		Recognized		
Marine use approval (NK, LR, ABS, GL)	☆ (LR, ABS, GL)		–	☆ (LR, ABS, GL)		–	☆ (LR, ABS, GL)	–	☆		–	☆	–	☆		–
Automatic tripping device	Thermal-magnetic			Thermal-magnetic			Electronic (effective value detection)		Thermal-magnetic			Electronic (effective value detection)		Thermal-magnetic		
Trip button	Equipped			Equipped			Equipped		Equipped			Equipped		Equipped		
Page of Characteristics and dimensions	154			158			160		162			164		168		

Notes:
*1 The trip action characteristics differ between AC and DC for products that are compatible with both AC and DC.
*2 Use two poles for three- and four-pole products. In this case, do not use the neutral pole of the four-pole products. If wired as shown on the right, three and four poles can be used for up to 400 and 500VDC, respectively.
*3 The cassette type design makes it easy for customer to install. Available for installation on side below 250A frame (excluding UVT).
*4 Use two poles for three- and four-pole products. In this case, do not use the neutral pole of the four-pole products. Not available for use with connection as shown on the right.
*5 Solid state relay output is option. Please specify if other output is necessary. (Standard type is thus SLT equipped) AS for flush plate type, an outline differs from a standard.
*6 Place an order of other models in conjunction with the circuit breaker.
*7 Not isolation compatible. excluding 400 to 800A frame.

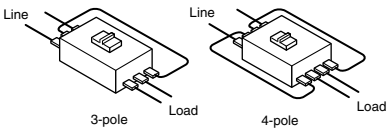

NF-S (Standard class)

630	800	800	1000	1250	1200	1600	1600
NF630-SEW	NF800-SEW	NF800-SDW	NF1000-SEW	NF1250-SEW	NF1250-SDW	NF1600-SEW	NF1600-SDW
Adjustable 300 350 400 500 600 630	Adjustable 400 450 500 600 700 800	(700) 800	Adjustable 500 600 700 800 900 1000	Adjustable 600 700 800 1000 1200 1250	1000 1250	Adjustable 800 1000 1200 1400 1500 1600	1600
3 4	3 4	2	3 4	3 4	2	3 4	2
690	690	690	690	690	690	690	690
10/10	10/10	–	25/13	25/13	–	25/13	–
30/30	30/30	–	65/33	65/33	–	65/33	–
42/42	42/42	–	85/43	85/43	–	85/43	–
50/50	50/50	–	85/43	85/43	–	85/43	–
50/50	50/50	–	85/43	85/43	–	85/43	–
50/50	50/50	–	85/43	85/43	–	85/43	–
85/85	85/85	–	125/63	125/63	–	125/63	–
85/85	85/85	–	125/63	125/63	–	125/63	–
–	–	40/40	–	–	40/20	–	40/20
8	8	8	8	8	8	8	8
AC	AC	DC	AC	AC	DC	AC	DC
Compatible	Compatible	Compatible	Compatible	Compatible	Compatible	Compatible	Compatible
Possible	Possible	Possible	Possible	Possible	Possible	Possible	Possible
6,000	4,000	4,000	3,000	3,000	3,000	3,000	3,000
1,000	500	500	500	500	500	500	500
B	B	A	B	B	A	B	B
7.6	9.6	–	20 at 0.1	20 at 0.1	–	20 at 0.1	–
3	3	3	3	3	3	3	3
A	A	N/A	A	A	N/A	A	A
140 185	210 280	210	210 280	210 280	210	210 280	210
257	275	275	406	406	406	406	406
103	103	103	140	140	140	140	140
155	155	155	190	190	190	190	190
6.5 8.3	10.9 14.2	9.0	23.5 30.7	23.5 30.7	22.0	34.5 41.2	32.0
●Busbar terminal	●Busbar terminal	●Busbar terminal	●Busbar terminal ●Busbar terminal	●Busbar terminal ●Busbar terminal	●Busbar terminal	●Busbar terminal ●Busbar terminal	●Busbar terminal
– –	– –	–	– –	– –	–	–	–
●Bar stud ●Bar stud	●Bar stud ●Bar stud	●Bar stud	●Bar stud ●Bar stud	●Bar stud ●Bar stud	●Bar stud	●Bar stud ●Bar stud	●Bar stud
● ●	● ●	●	● –	● –	●	–	–
● (*3) ●	● (*3) ●	●	● ●	● ●	●	● ●	●
● (*3) ●	● (*3) ●	●	● ●	● ●	●	● ●	●
● (*3) ●	● (*3) ●	●	● ●	● ●	●	● ●	●
● ●	● ●	●	● ●	● ●	●	● ●	●
● ●	● ●	●	● ●	● ●	●	● ●	●
● (*5)	● (*5)	–	● (*5)	● (*5)	–	● (*5)	–
–	–	–	–	–	–	–	–
● –	● –	●	– –	– –	–	–	–
● –	● –	●	– –	– –	–	–	–
● (*6)	● (*6)	●(*6)	● (*6)	● (*6)	● (*6)	● (*6)	● (*6)
● ●	● ●	●	●	●	●	●	●
● ●	● ●	●	–	–	–	–	–
–	–	–	–	–	–	–	–
●	●	●	●	●	●	●	●
●	●	●	–	–	–	–	–
●	●	●	● ●	● ●	●	● ●	●
●	●	●	–	–	–	–	–
● ●	● ●	●	●	●	●	–	–
● ●	● ●	●	–	–	–	–	–
● ●	●	●	●	●	●	–	–
–	–	–	–	–	–	–	–
Self-declaration	Self-declaration	Self-declaration	Self-declaration	Self-declaration	Self-declaration	Self-declaration	Self-declaration
Recognized	Recognized	Recognized	Recognized	Recognized	–	Recognized	–
☆ –	☆ –	–	☆ –	☆ –	–	–	–
Electronic (effective value detection)	Electronic (effective value detection)	Thermal-magnetic	Electronic (effective value detection)	Electronic (effective value detection)	Thermal-magnetic	Electronic (effective value detection)	magnetic
Equipped	Equipped	Equipped	Equipped	Equipped	Equipped	Equipped	Equipped
170	172	174	178	178	180	182	184

Remarks: 1. Products with rated current parenthesized are produced when an order is placed.
2. Specify "P-LT" when using a plug-in product with a lead-wire terminal block.
3. The circuit breaker has the rated short-circuit breaking capacity specified in the shaded cells.

NF-L / NF-H / NF-R (High-performance class)

Frame (A)	50			63			125			125 NEW			125 NEW			125			125			125	
Model	NF63-HV						NF125-HV			NF125-LXV			NF125-HXV			NF125-LGV			NF125-HGV			NF125-RGV	
Image																							
Rated current In (A) Rated ambient temperture 40°C (45°C for marine use)	10 15 16 20 25 30 32 40 50			60 63			15 16 20 30 32 40 50 60 63 75 80 100 125			(15) 16 20 (30) 32 40 50 (60) 63 (75) 80 100 125			(15) 16 20 (30) 32 40 50 (60) 63 (75) 80 100 125			16-20 20-25 25-32 32-40 35-40-50 45-50-63 56-63-80 70-80-100 90-100-125			16-20 20-25 25-32 32-40 35-40-50 45-50-63 56-63-80 70-80-100 90-100-125			16-20 20-25 25-32 32-40 40-50 50-63 63-80 80-100 100-125	
Number of poles	2	3	4	2	3	4	2	3	4	2	3	4	2	3	4	2	3	4	2	3	4	2	3
Rated insulation voltage Ui (V)	690			690			690			690			690			690			690			690	
Rated short-circuit breaking capacities (kA) — IEC 60947-2 EN 60947-2 (Icu/Ics) — AC 690V	2.5/2.5			2.5/2.5			10/8			8/8			10/8			8/8			10/8			–	
AC 500V	7.5/7.5			7.5/7.5			30/23			36/36			50/38			36/36			50/38			–	
AC 440V	10/8			10/8			50/38			50/50			65/65			50/50			65/65			125/125	
AC 415V	10/8			10/8			50/38			50/50			70/70			50/50			70/70			150/150	
AC 400V	10/8			10/8			50/38			50/50			75/75			50/50			75/75			150/150	
AC 380V	10/8			10/8			50/38			50/50			75/75			50/50			75/75			150/150	
AC 230V	25/19			25/19			100/75			90/90			100/100			90/90			100/100			150/150	
AC 200V	25/19			25/19			100/75			90/90			100/100			90/90			100/100			150/150	
DC 250V	7.5/7.5 (*5)			7.5/7.5 (*5)			–			20/20 (300V) (*2)			40/40 (300V) (*2)			20/20 (300V) (*2)			40/40 (300V) (*2)			–	
Rated impulse withstand voltage Uimp (kV)	8			8			8			8			8			8			8			8	
Current (*1)	AC/DC compatible			AC/DC compatible			AC			AC/DC compatible			AC/DC compatible			AC/DC compatible			AC/DC compatible			AC	
Suitability for isolation	Compatible			Compatible			Compatible			Compatible			Compatible			Compatible			Compatible			Compatible	
Reverse connection	Possible			Possible			Possible			Possible			Possible			Possible			Possible			Possible	
Number of operating cycles — Without current	15,000			15,000			25,000			50,000			50,000			50,000			50,000			50,000	
Number of operating cycles — With current (440VAC)	8,000			8,000			10,000			30,000			30,000			30,000			30,000			30,000	
Utilization category	A			A			A			A			A			A			A			A	
Pollution degree	3			3			3			3			3			3			3			3	
EMC environment condition (environment A or B)	N/A			N/A			N/A			N/A			N/A			N/A			N/A			N/A	
Overall dimensions (mm) — a	50	75	100	50	75	100	90		120	105		140	105		140	105		140	105		140	105	
Overall dimensions (mm) — b	130			130			130			165			165			165			165			165	
Overall dimensions (mm) — c	68			68			68			68			68			68			68			68	
Overall dimensions (mm) — ca	90			90			90			92			92			92			92			92	
Mass of front-face type (kg)	0.5	0.7	0.9	0.55	0.75	1.0	0.8	1.0	1.3	1.4	1.6	2.0	1.4	1.6	2.0	1.4	1.6	2.0	1.4	1.6	2.0	1.5	1.8
Installation and connections — Front connection (F) — Page	●Screw terminal			●Screw terminal			●Screw terminal			●Screw terminal			●Screw terminal			●			●			●Screw terminal	
Installation and connections — Solderless (BOX) terminal (SL) — 92	●			●			●			●			●			●			●			●	
Installation and connections — Rear (B) — 92	●Round stud			●Round stud			●Bar stud			●Bar stud			●Bar stud			●Bar stud			●Bar stud			●Bar stud	
Installation and connections — Plug-in (PM) — 92	●			●			●		●	●			●			●			●			●	
Cassette-type accessories — Alarm switch (AL) — 102	● (*3)		●	● (*3)		●	● (*3)		●	● (*3)		●	● (*3)		●	● (*3)		●	● (*3)		●	● (*3)	
Cassette-type accessories — Auxiliary switch (AX) — 102	● (*3)		●	● (*3)		●	● (*3)		●	● (*3)		●	● (*3)		●	● (*3)		●	● (*3)		●	● (*3)	
Cassette-type accessories — Shunt trip (SHT) — 102	● (*3)		●	● (*3)		●	● (*3)		●	● (*3)		●	● (*3)		●	● (*3)		●	● (*3)		●	● (*3)	
Cassette-type accessories — Undervoltage trip (UVT) — 102	● (*3)		●	● (*3)		●	● (*3)		●	● (*3)		●	● (*3)		●	● (*3)		●	● (*3)		●	● (*3)	
Cassette-type accessories — With lead-wire terminal block (SLT) — 114	●		●	●		●	●		●	●		●	●		●	●			●			●	
Cassette-type accessories — Pre-alarm (PAL) — 116	–			–			–			–			–			–			–			–	
External accessories — Enclosure — Closed (S) — 130	●		–	●		–	●		–	–			–		–	●		–	–			–	
External accessories — Enclosure — Dustproof (I) — 130	●		–	●		–	●		–	●		–	●		–	●		–	●		–	–	
External accessories — Enclosure — Waterproof (W) — 130	–	●	–	–	●	–	●		–	●		–	●		–	●		–	●		–	–	
External accessories — Electrical operation device (NFM) — 133	–			–			●			●			●			●			●			●	
External accessories — Mechanical interlock (MI) (*4) — Panel mounting — 129	●		●	●		●	●		●	●		●	●		●	●			●			●	
External accessories — Mechanical interlock (MI) (*4) — Breaker mounting — 129	●		–	●		–	●		–	●		–	●		–	●			●			●	
External accessories — Handle lock device — LC — 127	●			●			●			●			●			●			●			●	
External accessories — Handle lock device — HL — 127	●			●			●			●			●			●			●			●	
External accessories — Handle lock device — HL-S — 127	●			●			●			●			●			●			●			●	
External accessories — External operating handle — (F) — 117	●			●			●			●			●			●			●			●	
External accessories — External operating handle — (V) — 117	●			●			●			●			●			●			●			●	
External accessories — Terminal cover (TC-L, TC-S, TTC, BTC, PTC) — 121	●		●	●		●	●		●	●		●	●		●	●			●			●	
External accessories — Rear stud (B-ST) — 94	●			●			●	●	●	●	●	●	●	●	●	●			●			–	
External accessories — Plug-in (PM) — 94	●		●	●		●	●	●	●	●	●	●	●	●	●	●			●			●	
External accessories — IEC 35mm rail mounting adapters — 137	●		–	●		–	–			–			–			–			–			–	
CE marking	Self-declaration			Self-declaration			Self-declaration			Self-declaration			Self-declaration			Self-declaration			Self-declaration			Self-declaration	
CCC recognition	Recognized			Recognized			Recognized			Recognized			Recognized			Recognized			Recognized			Recognized	
Marine use approval (NK, LR, ABS, GL)	☆		–	☆		–	☆		–	☆ (LR, ABS, GL)		–	☆ (LR, ABS, GL)		–	☆ (LR, ABS, GL)		–	☆ (LR, ABS, GL)		–	☆ (LR, ABS, GL)	
Automatic tripping device	Thermal-magnetic			Thermal-magnetic			Thermal-magnetic			Thermal-magnetic			Thermal-magnetic			Thermal-magnetic			Thermal-magnetic			Thermal-magnetic	
Trip button	Equipped			Equipped			Equipped			Equipped			Equipped			Equipped			Equipped			Equipped	
Page of Characteristics and dimensions	142						144			148			148			158			158			158	

Notes:
*1 The trip action characteristics differ between AC and DC for products that are compatible with both AC and DC.
*2 Use two poles for three- and four-pole products. In this case, do not use the neutral pole of the four-pole products. If wired as shown on the right, three and four poles can be used for up to 500 and 600VDC, respectively.
*3 The cassette type design makes it easy for customer to install. Available for installation on side below 250A frame (excluding UVT).
*4 Not isolation compatible, excluding 400 to 800A frame.
*5 Use two poles for three- and four-pole products. In this case, do not use the neutral pole of the four-pole products. Not available for use with connection as shown on the right.

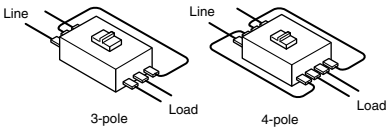

NF-L / NF-H / NF-R (High-performance class)

	125		160			160			250			250 NEW			250 NEW			250			250			250			250	
	NF125-HEV		NF160-LGV			NF160-HGV			NF250-HV			NF250-LXV			NF250-HXV			NF250-LGV			NF250-HGV			NF250-RGV				
	16-32 32-63 63-125		125-160			125-160			125 150 160 175 200 225 250			(100) 125 150 175 200 225 250			(100) 125 150 175 200 225 250			125-160 140-160-200 175-200-250			125-160 140-160-200 175-200-250			125-160 160-200 200-250		
	3	4	2	3	4	2	3	4	2	3	4	2	3	4	2	3	4	2	3	4	2	3	4	2	3			
	690		690			690			690			690			690			690			690			690				
	10/8		8/8			10/8			10/8			8/8			10/8			8/8			10/8			–				
	50/38		36/36			50/38			50/38			36/36			50/38			36/36			50/38			–				
	65/65		50/50			65/65			65/65			50/50			65/65			50/50			65/65			125/125				
	70/70		50/50			70/70			70/70			50/50			70/70			50/50			70/70			150/150				
	75/75		50/50			75/75			75/75			50/50			75/75			50/50			75/75			150/150				
	75/75		50/50			75/75			75/75			50/50			75/75			50/50			75/75			150/150				
	100/100		90/90			100/100			100/100			90/90			100/100			90/90			100/100			150/150				
	100/100		90/90			100/100			100/100			90/90			100/100			90/90			100/100			150/150				
	–		20/20 (300V) (*2)			40/40 (300V) (*2)			40/40 (300V) (*2)			20/20 (300V) (*2)			40/40 (*2)			20/20 (300V) (*2)			40/40 (300V) (*2)			–				
	8		8			8			8			8			8			8			8			8				
	AC		AC/DC compatible			AC/DC compatible			AC/DC compatible			AC/DC compatible			AC/DC compatible			AC/DC compatible			AC/DC compatible			AC				
	Compatible		Compatible			Compatible			Compatible			Compatible			Compatible			Compatible			Compatible			Compatible				
	Possible		Possible			Possible			Possible			Possible			Possible			Possible			Possible			Possible				
	25,000		40,000			40,000			25,000			25,000			25,000			25,000			25,000			25,000				
	10,000		15,000			15,000			10,000			10,000			10,000			10,000			10,000			10,000				
	A		A			A			A			A			A			A			A			A				
	3		3			3			3			3			3			3			3			3				
	A		N/A			N/A			N/A			N/A			N/A			N/A			N/A			N/A				
	105	140	105		140	105		140	105		140	105		140	105		140	105		140	105		140	105				
	165		165			165			165			165			165			165			165			165				
	68		68			68			68			68			68			68			68			68				
	92		92			92			92			92			92			92			92			92				
	1.7	2.2	1.4	1.6	2.0	1.4	1.6	2.0	1.4	1.6	2.0	1.4	1.6	2.0	1.4	1.6	2.0	1.4	1.6	2.0	1.4	1.6	2.0	1.5	1.8			
	●Screw terminal		●Screw terminal			●Screw terminal			●Screw terminal			●Screw terminal			●Screw terminal			●Screw terminal			●Screw terminal			●Busbar terminal				
	●	●	●			●			●		●	●			●			●			●			●				
	●Bar stud		●Bar stud			●Bar stud			●Bar stud			●Bar stud			●Bar stud			●Bar stud			●Bar stud			●Bar stud				
	●	●	●			●			●		●	●			●			●			●			●				
	● (*3)	●	● (*3)		●	● (*3)		●	● (*3)		●	● (*3)		●	● (*3)		●	● (*3)		●	● (*3)		●	● (*3)				
	● (*3)	●	● (*3)		●	● (*3)		●	● (*3)		●	● (*3)		●	● (*3)		●	● (*3)		●	● (*3)		●	● (*3)				
	● (*3)	●	● (*3)		●	● (*3)		●	● (*3)		●	● (*3)		●	● (*3)		●	● (*3)		●	● (*3)		●	● (*3)				
	● (*3)	●	● (*3)		●	● (*3)		●	● (*3)		●	● (*3)		●	● (*3)		●	● (*3)		●	● (*3)		●	● (*3)				
	●	●	●			●			●		●	●		●	●		●	●			●			●				
	●		–			–			–			–			–			–			–			–				
	–		●		–	–			–			–			–		–	●		–	–			–				
	●	–	●		–	●		–	●		–	●		–	●		–	●		–	●		–	–				
	●	–	●		–	●		–	●		–	●		–	●		–	●		–	●		–	–				
	●		●			●			●			●			●			●			●			●				
	●	●	●			●			●		●	●		●	●		●	●			●			●				
	●	–	●			●			●		–	●		–	●		–	●			●			●				
	●		●			●			●			●			●			●			●			●				
	●		●			●			●			●			●			●			●			●				
	●		●			●			●			●			●			●			●			●				
	●		●			●			●			●			●			●			●			●				
	●		●			●			●			●			●			●			●			●				
	●	●	●			●			●		●	●		●	●		●	●			●			●				
	●	●	●			●			●		●	●	●	●	●		●	●			●			–				
	●	●	●			●			●		●	●	●	●	●		●	●			●			●				
	–		–			–			–			–			–			–			–			–				
	Self-declaration		Self-declaration			Self-declaration			Self-declaration			Self-declaration			Self-declaration			Self-declaration			Self-declaration			Self-declaration				
	Recognized		Recognized			Recognized			Recognized			Recognized			Recognized			Recognized			Recognized			Recognized				
	☆ (LR, ABS, GL)	–	☆ (LR, ABS, GL)			☆ (LR, ABS, GL)			☆		–	☆ (LR, ABS, GL)		–	☆ (LR, ABS, GL)		–	☆ (LR, ABS, GL)			☆ (LR, ABS, GL)			☆ (LR, ABS, GL)				
	Electronic		Thermal-magnetic			Thermal-magnetic			Thermal-magnetic			Thermal-magnetic			Thermal-magnetic			Thermal-magnetic			Thermal-magnetic			Thermal-magnetic				
	Equipped		Equipped			Equipped			Equipped			Equipped			Equipped			Equipped			Equipped			Equipped				
	160		158			158			152			154			154			158			158			158				

Remarks: 1. Products with rated current parenthesized are produced when an order is placed.
2. Specify "P-LT" when using a plug-in product with a lead-wire terminal block.
3. The circuit breaker has the rated short-circuit breaking capacity specified in the shaded cells.

NF-H / NF-R (High-performance class)

Frame (A)			250		400		400	630		630	800		800
Model			NF250-HEV		NF400-HEW		NF400-REW	NF630-HEW		NF630-REW	NF800-HEW		NF800-REW
Image													
Rated current In (A) Rated ambient temperture 40°C (45°C for marine use)			80-160 125-250		Adjustable 200 225 250 300 350 400		Adjustable 200 225 250 300 350 400	Adjustable 300 350 400 500 600 630		Adjustable 300 350 400 500 600 630	Adjustable 400 450 500 600 700 800		Adjustable 400 450 500 600 700 800
Number of poles			3	4	3	4	3	3	4	3	3	4	3
Rated insulation voltage Ui (V)			690		690		690	690		690	690		690
Rated short-circuit breaking capacities (kA) IEC 60947-2 EN 60947-2 (Icu/Ics)	AC	690V	10/8		35/18		–	35/18		–	15/15		–
	AC	500V	50/38		50/50		70/35	50/50		70/35	50/50		70/35
	AC	440V	65/65		65/65		125/63	65/65		125/63	65/65		125/63
	AC	415V	70/70		70/70		125/63	70/70		125/63	70/70		125/63
	AC	400V	75/75		70/70		125/63	70/70		125/63	70/70		125/63
	AC	380V	75/75		70/70		125/63	70/70		125/63	70/70		125/63
	AC	230V	100/100		100/100		150/75	100/100		150/75	100/100		150/75
	AC	200V	100/100		100/100		150/75	100/100		150/75	100/100		150/75
	DC	250V	–		–		–	–		–	–		–
Rated impulse withstand voltage Uimp (kV)			8		8		8	8		8	8		8
Current			AC		AC		AC	AC		AC	AC		AC
Suitability for isolation			Compatible		Compatible		Compatible	Compatible		Compatible	Compatible		Compatible
Reverse connection			Possible		Possible		Possible	Possible		Possible	Possible		Possible
Number of operating cycles	Without current		25,000		6,000		6,000	6,000		6,000	4,000		4,000
	With current (440VAC)		10,000		1,000		1,000	1,000		1,000	500		500
Utilization category			A		B		B	B		B	B		B
Rated short time with stand current Icu (kA) at 0.25s			–		5		5	7.6		7.6	9.6		9.6
Pollution degree			3		3		3	3		3	3		3
EMC environment condition (environment A or B)			A		A		A	A		A	A		A
Overall dimensions (mm)		a	105	140	140	185	140	140	185	140	210	280	210
		b	165		257		257	257		257	275		275
		c	68		103		103	103		103	103		103
		ca	92		155		155	155		155	155		155
Mass of front-face type (kg)			1.7	2.2	6.0	7.6	6.0	6.5	8.3	6.0	10.9	14.2	10.9
Installation and connections: Front connection (F)		Page	●Screw terminal		●Busbar terminal		●Busbar terminal	●Busbar terminal	●Busbar terminal	●Busbar terminal	●Busbar terminal	●Busbar terminal	●Busbar terminal
Solderless (BOX) terminal (SL)		92	●	●	–	–	–	–	–	–	–	–	–
Rear (B)		92	●Bar stud	●Bar stud	●Bar stud		●Bar stud	●Bar stud	●Bar stud	●Bar stud	●Bar stud	●Bar stud	●Bar stud
Plug-in (PM)		92	●	●	●	●	●	●	●	●	●	●	●
Cassette-type accessories: Alarm switch (AL)		102	● (*1)	●	● (*1)	●	● (*1)	● (*1)	●	● (*1)	● (*1)	●	● (*1)
Auxiliary switch (AX)		102	● (*1)	●	● (*1)	●	● (*1)	● (*1)	●	● (*1)	● (*1)	●	● (*1)
Shunt trip (SHT)		102	● (*1)	●	● (*1)	●	● (*1)	● (*1)	●	● (*1)	● (*1)	●	● (*1)
Undervoltage trip (UVT)		102	● (*1)	●	●	●	●	●	●	●	●	●	●
With lead-wire terminal block (SLT)		114	●	●	●	●	●	●	●	●	●	●	●
Pre-alarm (PAL)		116	●		● (*2)		● (*2)	● (*2)		● (*2)	● (*2)		● (*2)
External accessories: Enclosure	Closed (S)	130	–		–		–	–		–	–		–
	Dustproof (I)	130	●	–	–		–	–		–	–		–
	Waterproof (W)	130	●	–	–		–	–		–	–		–
Electrical operation device (NFM)		133	●		● (*3)		● (*3)	● (*3)		● (*3)	● (*3)		● (*3)
Mechanical interlock (MI) (*4)	Panel mounting	129	●	●	●	●	●	●	●	●	●	●	●
	Breaker mounting	129	●	–	●	–	●	●	–	●	●	–	●
Handle lock device	LC	127	●		–		–	–		–	–		–
	HL	127	●		●		●	●		●	●		●
	HL-S	127	●		●		●	●		●	●		●
External operating handle	(F)	117	●		●		●	●		●	●		●
	(V)	117	●		●		●	●		●	●		●
Terminal cover (TC-L, TC-S, TTC, BTC, PTC)		121	●	●	●	●	●	●	●	●	●		●
Rear stud (B-ST)		94	●	●	●		●	●	●	●	●	●	●
Plug-in (PM)		94	●	●	●		●	●	●	●	●		●
IEC 35mm rail mounting adapters		137	–		–		–	–		–	–		–
CE marking			Self-declaration		Self-declaration		Self-declaration	Self-declaration		Self-declaration	Self-declaration		Self-declaration
CCC recognition			Recognized		Recognized		Recognized	Recognized		Recognized	Recognized		Recognized
Marine use approval (NK, LR, ABS, GL)			☆ (LR, ABS, GL)	–	☆	–	☆	☆	–	☆	☆	–	☆
Automatic tripping device			Electronic (effective value detection)		Electronic (effective value detection)		Electronic (effective value detection)	Electronic (effective value detection)		Electronic (effective value detection)	Electronic (effective value detection)		Electronic (effective value detection)
Trip button			Equipped		Equipped		Equipped	Equipped		Equipped	Equipped		Equipped
Page of Characteristics and dimensions			160		164		164	170		170	172		172

Notes: *1 The cassette type design makes it easy for customer to install. Available for installation on side below 250A frame (excluding UVT).
*2 Solid state relay output is option. Please specify if other output is necessary. (Standard type is thus SLT equipped).
*3 Place an order of other models in conjunction with the circuit breaker.
*4 Not isolation compatible, excluding 400 to 800A frame.

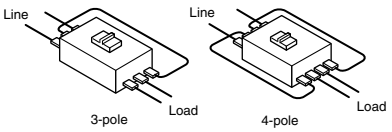

NF-U (Ultra current-limiting class)

	125			250			400			800		
	NF125-UV			NF250-UV			NF400-UEW			NF800-UEW		
	15 20 30 40 50 60 75 100 125			125 150 175 200 225 250			Adjustable 200 225 250 300 350 400			Adjustable 400 450 500 600 700 800		
	2	3	4	2	3	4	3	4		3	4	
	690			690			690			690		
	10/10			15/15			–			35/35		
	200/200			200/200			170/170			170/170		
	200/200			200/200			200/200			200/200		
	200/200			200/200			200/200			200/200		
	200/200			200/200			200/200			200/200		
	200/200			200/200			200/200			200/200		
	200/200			200/200			200/200			200/200		
	200/200			200/200			200/200			200/200		
	–			–			–			–		
	8			8			8			8		
	AC			AC			AC			AC		
	Compatible			Compatible			Compatible			Compatible		
	Possible			Possible			Possible			Possible		
	25,000			25,000			6,000			4,000		
	10,000			10,000			1,000			500		
	A			A			B			B		
	–			–			5			9.6		
	3			3			3			3		
	N/A			N/A			A			A		
	90		120	105		140	140		280	210		280
	191			240			297		322	322		
	68			68			200			200		
	90			92			252			252		
	1.35	1.5	1.9	2.5	2.7	3.7	16.2		25.4	27.6		33.7
	●Screw terminal			●Screw terminal			●Busbar terminal			●Busbar terminal		
	●Bar stud			●Bar stud			–			–		
	●Bar stud			●Bar stud			●Bar stud			●Bar stud		
	●		–	●		–	●		–	–		
	● (*1)		●	● (*1)		●	● (*1)			● (*1)		
	● (*1)		●	● (*1)		●	● (*1)			● (*1)		
	● (*1)		●	● (*1)		●	● (*1)			● (*1)		
	● (*1)		●	● (*1)		●	●			●		
	●			●			●			●		
	–			–			● (*2)			● (*2)		
	–			–			–			–		
	–			–			–			–		
	–			–			–			–		
	●			●			● (*3)			● (*3)		
	●			●			●			●		
	–			–			–			–		
	●			●			–			–		
	●			●			●			●		
	●			●			●			●		
	●			●			●			●		
	●			●			●		–	–		
	●			●			●			●		
	–			–			–			–		
	●		–	●		–	–			–		
	–			–			–			–		
	Self-declaration			Self-declaration			Self-declaration			Self-declaration		
	–			–			–			–		
	☆		–	☆		–	☆		–	–		
	Thermal-magnetic			Thermal-magnetic			Electronic (effective value detection)			Electronic (effective value detection)		
	Equipped			Equipped			Equipped			Equipped		
	150			156			166			176		

Remarks: 1. Products with rated current parenthesized are produced when an order is placed.
2. Specify "P-LT" when using a plug-in product with a lead-wire terminal block.
3. The circuit breaker has the rated short-circuit breaking capacity specified in the shaded cells.

NV-C (Economy class) Harmonic Surge Ready

Frame (A)	50		60		63		100	125
Model	NV63-CV						NV125-CV	
Image								
Rated current In (A) Rated ambient temperture 40°C	(5) (10) (15) 16 20 25 (30) 32 40 50		(60)		63		(60) 63 (75) 80 100	125
Number of poles	2	3	2	3	2	3	3	3
Phase line (*1)	1ϕ2W	3ϕ3W, 1ϕ3W, 1ϕ2W	1ϕ2W	3ϕ3W, 1ϕ3W, 1ϕ2W	1ϕ2W	3ϕ3W, 1ϕ3W, 1ϕ2W	3ϕ3W, 1ϕ3W, 1ϕ2W	3ϕ3W, 1ϕ3W, 1ϕ2W
Rated operational voltage Ue (V) (*2) AC	100-240	100-440	100-240	100-440	100-240	100-440	100-440	100-440
High-speed type: Rated current sensitivity (mA)	30	30,100/200/500 selectable	30	30,100/200/500 selectable	30	30,100/200/500 selectable	30,100/200/500 selectable	30,100/200/500 selectable
High-speed type: Max. operating time (s) at IΔn	0.1		0.1		0.1		0.1	0.1
High-speed type: Max. operating time (s) at 5IΔn	0.04		0.04		0.04		0.04	0.04
Time-delay type: Rated current sensitivity (mA)	–		–		–		(100/200/500 selectable)	(100/200/500 selectable)
Time-delay type: Max. operating time (s) (*3)	–		–		–		(0.45/1.0/2.0 selectable)	(0.45/1.0/2.0 selectable)
Time-delay type: Internal non-operating (s) (or more)	–		–		–		(0.1/0.5/1.0)	(0.1/0.5/1.0)
Earth leakage indication system	Mechanical type (button)		Mechanical type (button)		Mechanical type (button)		Mechanical type (button)	Mechanical type (button)
Rated short-circuit breaking capacities (kA) IEC 60947-2 EN 60947-2 (Icu/Ics) AC 440V	–	2.5/2.5	–	2.5/2.5	–	2.5/2.5	10/5	10/5
415V	–	2.5/2.5	–	2.5/2.5	–	2.5/2.5	10/5	10/5
400V	–	5/5	–	5/5	–	5/5	10/5	10/5
230V	7.5/7.5		7.5/7.5		7.5/7.5		30/15	30/15
200V	7.5/7.5		7.5/7.5		7.5/7.5		30/15	30/15
100V	7.5/7.5		7.5/7.5		7.5/7.5		30/15	30/15
Rated impulse withstand voltage Uimp (kV)	6		6		6		6	6
Current	AC		AC		AC		AC	AC
Suitability for isolation	Compatible		Compatible		Compatible		Compatible	Compatible
Reverse connection (below 230VAC)	Possible		Possible		Possible		Possible	Possible
Number of operating cycles: Without current	10,000		10,000		10,000		10,000	10,000
Number of operating cycles: With current	6,000		6,000		6,000		6,000	6,000
Utilization category	A		A		A		A	A
Pollution degree	2		2		2		2	2
EMC environment condition (environment A or B)	A		A		A		A	A
Overall dimensions (mm) a	75		75		75		90	90
b	130		130		130		130	130
c	68		68		68		68	68
ca	90		90		90		90	90
Mass of front-face type (kg)	0.7	0.75	0.7	0.75	0.7	0.75	1.0	1.0
Installation and connections: Front connection (F)	Page	●Screw terminal		●Screw terminal		●Screw terminal	●Screw terminal	●Screw terminal
Solderless (BOX) terminal (SL)	92	–		–		–	–	–
Rear (B)		●Round stud		●Round stud		●Round stud	●Bar stud	●Bar stud
Plug-in (PM)		–		–		–	–	–
Cassette-type accessories: Alarm switch (AL)	102	● (*4)		● (*4)		● (*4)	● (*4)	● (*4)
Auxiliary switch (AX)		● (*4)		● (*4)		● (*4)	● (*4)	● (*4)
Shunt trip (SHT)		● (*4)		● (*4)		● (*4)	● (*4)	● (*4)
Undervoltage trip (UVT)		● (*4)		● (*4)		● (*4)	● (*4)	● (*4)
Earth leakage alarm switch (EAL)		–		–		–	–	–
With lead-wire terminal block (SLT)	114	●		●		●	●	●
Test button module (TBM)	115	● (*5)		● (*5)		● (*5)	● (*5)	● (*5)
External accessories: Enclosure Closed (S)	130	–		–		–	–	–
Dustproof (I)		–		–		–	–	–
Waterproof (W)		–		–		–	–	–
Electrical operation device (NFM)	133	–		–		–	●	●
Mechanical interlock (MI) (*7) Panel mounting	129	●		●		●	●	●
Mechanical interlock (MI) (*7) Breaker mounting		●		●		●	●	●
Handle lock device LC	127	●		●		●	●	●
Handle lock device HL		●		●		●	●	●
Handle lock device HL-S		●		●		●	●	●
External operating handle (F)	117	●		●		●	●	●
External operating handle (V)		●		●		●	●	●
Terminal cover (TC-L, TC-S, TTC, BTC, PTC)	121	●		●		●	●	●
Rear stud (B-ST)	94	●		●		●	●	●
Plug-in (PM)		–		–		–	–	–
IEC 35mm rail mounting adapters	137	●		●		●	–	–
CE marking	Self-declaration		Self-declaration		Self-declaration		Self-declaration	Self-declaration
CCC recognition	–	Recognized	–	Recognized	–	Recognized	Recognized	Recognized
Marine use approval (NK, LR, ABS, GL)	–		–		–		–	–
Automatic tripping device	Thermal-magnetic		Thermal-magnetic		Thermal-magnetic		Thermal-magnetic	Thermal-magnetic
Trip button	Equipped		Equipped		Equipped		Equipped	Equipped
Page of Characteristics and dimensions	186						188	

Notes:
*1 If using a 3-pole earth leakage circuit breaker as a 1-pole 2-phase device, connect the left and right poles and not the central pole. When wiring to single-phase 3-wire, connect the neutral line to the central pole.
*2 In case of time delay type, rated voltage is 200-440VAC.
*3 When the operating time are 0.45, 1.0 and 2.0 seconds, the Earth Leakage circuit breaker operates between 0.15 and 0.45 seconds, between 0.6 and 1.0 seconds and between 1.2 and 2.0 seconds respectively.
*4 The cassette type design makes it easy for customer to install. Available for installation on side below 250A frame (excluding UVT).
*5 Standard type is SLT equipped.
*6 Place an order of other models in conjunction with the circuit breaker.
*7 Not isolation compatible, excluding 400 to 630A frame.
*8 AC100V does not acquire the CCC certification.

NV-C (Economy class) Harmonic Surge Ready

	225	250	400	600	630
	NV250-CV		NV400-CW	NV630-CW	
	125 150 175 200 225	250	250 300 350 400	500 600	(630)
	3	3	3	3	3
	3ϕ3W, 1ϕ3W, 1ϕ2W	3ϕ3W, 1ϕ3W, 1ϕ2W	3ϕ3W, 1ϕ3W, 1ϕ2W	3ϕ3W, 1ϕ3W, 1ϕ2W	3ϕ3W, 1ϕ3W, 1ϕ2W
	100-440	100-440	100-440	200-440	200-440
	30,100/200/500 selectable	30,100/200/500 selectable	(30),100/200/500 selectable	–	–
	0.1	0.1	0.1	–	–
	0.04	0.04	0.04	–	–
	(100/200/500 selectable)	(100/200/500 selectable)	(100/200/500 selectable)	(100/200/500 selectable)	(100/200/500 selectable)
	(0.45/1.0/2.0 selectable)	(0.45/1.0/2.0 selectable)	(0.45/1.0/2.0 selectable)	(0.45/1.0/2.0 selectable)	(0.45/1.0/2.0 selectable)
	(0.1/0.5/1.0)	(0.1/0.5/1.0)	(0.1/0.5/1.0)	(0.1/0.5/1.0)	(0.1/0.5/1.0)
	Mechanical type (button)	Mechanical type (button)	Mechanical type (button)	Mechanical type (button)	Mechanical type (button)
	15/12	15/12	25/13	36/18	36/18
	25/19	25/19	36/18	36/18	36/18
	25/19	25/19	36/18	36/18	36/18
	36/27	36/27	50/25	50/25	50/25
	36/27	36/27	50/25	50/25	50/25
	36/27	36/27	50/25	–	–
	6	6	8	8	8
	AC	AC	AC	AC	AC
	Compatible	Compatible	Compatible	Compatible	Compatible
	Possible	Possible	Possible	Possible	Possible
	8,000	8,000	6,000	6,000	6,000
	4,000	4,000	1,000	1,000	1,000
	A	A	A	A	A
	2	2	3	3	3
	A	A	A	A	A
	105	105	140	140	140
	165	165	257	257	257
	68	68	103	103	103
	92	92	134	155	155
	1.7	1.7	6.1	6.9	6.9
	●Screw terminal	●Screw terminal	●Busbar terminal	●Busbar terminal	●Busbar terminal
	–	–	–	–	–
	●Bar stud	●Bar stud	●Bar stud	●Bar stud	●Bar stud
	–	–	–	–	–
	● (*4)	● (*4)	● (*4)	● (*4)	● (*4)
	● (*4)	● (*4)	● (*4)	● (*4)	● (*4)
	● (*4)	● (*4)	● (*4)	● (*4)	● (*4)
	● (*4)	● (*4)	●	●	●
	–	–	–	–	–
	●	●	●	●	●
	● (*5)	● (*5)	● (*5)	● (*5)	● (*5)
	–	–	–	–	–
	–	–	–	–	–
	–	–	–	–	–
	●	●	● (*6)	● (*6)	● (*6)
	●	●	●	●	●
	●	●	●	●	●
	●	●	–	–	●
	●	●	●	●	●
	●	●	●	●	●
	●	●	●	●	●
	●	●	●	●	●
	●	●	●	●	●
	●	●	●	●	●
	–	–	–	–	–
	–	–	–	–	–
	TÜV approval	TÜV approval	Self-declaration	Self-declaration	Self-declaration
	Recognized	Recognized	Recognized	Recognized	Recognized
	–	–	–	–	–
	Thermal-magnetic	Thermal-magnetic	Thermal-magnetic	Thermal-magnetic	Thermal-magnetic
	Equipped	Equipped	Equipped	Equipped	Equipped
	190		194	198	

Remarks: 1. Products with rated current parenthesized are produced when an order is placed.
2. Specify "P-LT" when using a plug-in product with a lead-wire terminal block.
3. The circuit breaker has the rated short-circuit breaking capacity specified in the shaded cells.
4.

Rated operational voltage	Applicable circuit voltage	Available voltage range
100-240V	100/110/200/220/230/240V	85-264V
100-440V	100/110/200/220/240/254/265/380/400/415/440V	85-484V
200-440V	200/220/240/254/265/380/400/415/440V	170-484V

NV-S (Standard class) Harmonic Surge Ready

Frame (A)			30	32	50	60	63	100		125		125	
Model			NV32-SV		NV63-SV			NV125-SV				NV125-SEV	
Image													
Rated current In (A) Rated ambient temperture 40°C			(5) 6 10 (15) 16 20 25 (30)	(32)	(5) (10) (15) 16 20 25 (30) 32 40 50	(60)	63	(15) 16 20 (30) 32 40 50 (60) 63 (75) 80 100 (*3)		125		63-125	
Number of poles			3	3	3	3	3	3	4	3	4	3	4
Phase line (*1)			3ϕ3W, 1ϕ3W, 1ϕ2W	3ϕ3W, 1ϕ3W, 1ϕ2W	3ϕ3W, 1ϕ3W, 1ϕ2W	3ϕ3W, 1ϕ3W, 1ϕ2W	3ϕ3W, 1ϕ3W, 1ϕ2W	3ϕ3W, 1ϕ3W, 1ϕ2W	3ϕ4W	3ϕ3W, 1ϕ3W, 1ϕ2W	3ϕ4W	3ϕ3W, 1ϕ2W	3ϕ4W
Rated operational voltage Ue (V) (*2)		AC	100-440	100-440	100-440	100-440	100-440	100-440	200-440	100-440	200-440	100-440	
High-speed type	Rated current sensitivity (mA)		30,100/200/500 selectable	30,100/200/500 selectable	30,100/200/500 selectable	30,100/200/500 selectable	30,100/200/500 selectable	30,100/200/500 selectable		30,100/200/500 selectable		(30),100/200/500 selectable	
High-speed type	Max. operating time (s)	at IΔn	0.1	0.1	0.1	0.1	0.1	0.1		0.1		0.1	
High-speed type	Max. operating time (s)	at 5IΔn	0.04	0.04	0.04	0.04	0.04	0.04		0.04		0.04	
Time-delay type	Rated current sensitivity (mA)		–	–	–	–	–	(100/200/500selectable)		(100/200/500selectable)		(100/200/500selectable)	
Time-delay type	Max. operating time (s) (*4)		–	–	–	–	–	(0.45/1.0/2.0selectable)		(0.45/1.0/2.0selectable)		(0.45/1.0/2.0selectable)	
Time-delay type	Internal non-operating (s) (or more)		–	–	–	–	–	(0.1/0.5/1.0)		(0.1/0.5/1.0)		(0.1/0.5/1.0)	
Earth leakage indication system			Mechanical type (button)	Mechanical type (button)	Mechanical type (button)	Mechanical type (button)	Mechanical type (button)	Mechanical type (button)		Mechanical type (button)		Mechanical type (button)	
Rated short-circuit breaking capacities (kA)	IEC 60947-2 EN 60947-2 (Icu/Ics)	AC 440V	5/5	5/5	7.5/7.5	7.5/7.5	7.5/7.5	25/25		25/25		36/36	
Rated short-circuit breaking capacities (kA)	IEC 60947-2 EN 60947-2 (Icu/Ics)	AC 415V	5/5	5/5	7.5/7.5	7.5/7.5	7.5/7.5	30/30		30/30		36/36	
Rated short-circuit breaking capacities (kA)	IEC 60947-2 EN 60947-2 (Icu/Ics)	AC 400V	5/5	5/5	7.5/7.5	7.5/7.5	7.5/7.5	30/30		30/30		36/36	
Rated short-circuit breaking capacities (kA)	IEC 60947-2 EN 60947-2 (Icu/Ics)	AC 230V	10/10	10/10	15/15	15/15	15/15	50/50		50/50		85/85	
Rated short-circuit breaking capacities (kA)	IEC 60947-2 EN 60947-2 (Icu/Ics)	AC 200V	10/10	10/10	15/15	15/15	15/15	50/50		50/50		85/85	
Rated short-circuit breaking capacities (kA)	IEC 60947-2 EN 60947-2 (Icu/Ics)	AC 100V	10/10	10/10	15/15	15/15	15/15	50/50	–	50/50	–	85/85	
Rated impulse withstand voltage Uimp (kV)			6	6	6	6	6	6		6		6	
Current			AC	AC	AC	AC	AC	AC		AC		AC	
Suitability for isolation			Compatible	Compatible	Compatible	Compatible	Compatible	Compatible		Compatible		Compatible	
Reverse connection (below 230VAC)			Possible	Possible	Possible	Possible	Possible	Possible		Possible		Possible	
Number of operating cycles	Without current		10,000	10,000	15,000	15,000	15,000	25,000		25,000		25,000	
Number of operating cycles	With current		6,000	6,000	8,000	8,000	8,000	10,000		10,000		10,000	
Utilization category			A	A	A	A	A	A		A		A	
Rated short time withstand current Icu (kA) at 0.25s			–	–	–	–	–	–		–		–	
Pollution degree			2	2	2	2	2	2		2		2	
EMC environment condition (environment A or B)			A	A	A	A	A	A		A		A	
Overall dimensions (mm)		a	75	75	75	75	75	90	120	90	120	105	140
Overall dimensions (mm)		b	130	130	130	130	130	130		130		165	
Overall dimensions (mm)		c	68	68	68	68	68	68		68		68	
Overall dimensions (mm)		ca	90	90	90	90	90	90		90		92	
Mass of front-face type (kg)			0.75	0.75	0.75	0.8	0.8	1.1	1.4	1.1	1.4	1.9	2.5
Installation and connections	Front connection (F)	Page	●Screw terminal	●Screw terminal	●Screw terminal	●Screw terminal	●Screw terminal	●Screw terminal		●Screw terminal		●	
Installation and connections	Solderless (BOX) terminal (SL)	92	–	–	–	–	–	–		–		–	
Installation and connections	Rear (B)	92	●Round stud	●Round stud	●Round stud	●Round stud	●Round stud	●Bar stud		●Bar stud		●Bar stud	
Installation and connections	Plug-in (PM)	92	–	–	–	–	–	–		–		–	
Cassette-type accessories	Alarm switch (AL)	102	● (*5)	● (*5)	● (*5)	● (*5)	● (*5)	● (*5)	●	● (*5)	●	● (*5)	●
Cassette-type accessories	Auxiliary switch (AX)	102	● (*5)	● (*5)	● (*5)	● (*5)	● (*5)	● (*5)	●	● (*5)	●	● (*5)	●
Cassette-type accessories	Shunt trip (SHT)	102	● (*5)	● (*5)	● (*5)	● (*5)	● (*5)	● (*5)	●	● (*5)	●	● (*5)	●
Cassette-type accessories	Undervoltage trip (UVT)	102	● (*5)	● (*5)	● (*5)	● (*5)	● (*5)	● (*5)	●	● (*5)	●	● (*5)	●
Cassette-type accessories	Earth leakage alarm switch (EAL)	102	–	–	–	–	–	–		–		–	
Cassette-type accessories	With lead-wire terminal block (SLT)	114	●	●	●	●	●	●	●	●	●	●	
Cassette-type accessories	Test button module (TBM)	115	● (*6)	● (*6)	● (*6)	● (*6)	● (*6)	● (*6)		● (*6)		● (*6)	
External accessories	Enclosure Closed (S)	130	–	–	–	–	–	–		–		●	–
External accessories	Enclosure Dustproof (I)	130	–	–	–	–	–	–		–		●	–
External accessories	Enclosure Waterproof (W)	130	–	–	–	–	–	–		–		●	–
External accessories	Electrical operation device (NFM)	133	–	–	–	–	–	●		●		●	
External accessories	Mechanical interlock (MI) (*8) Panel mounting	129	●	●	●	●	●	●	●	●	●	●	
External accessories	Mechanical interlock (MI) (*8) Breaker mounting	129	●	●	●	●	●	●	–	●	–	●	–
External accessories	Handle lock device LC	127	●	●	●	●	●	●		●		●	
External accessories	Handle lock device HL	127	●	●	●	●	●	●		●		●	
External accessories	Handle lock device HL-S	127	●	●	●	●	●	●		●		●	
External accessories	External operating handle (F)	117	●	●	●	●	●	●		●		●	
External accessories	External operating handle (V)	117	●	●	●	●	●	●		●		●	
External accessories	Terminal cover (TC-L, TC-S, TTC, BTC, PTC)	121	●	●	●	●	●	●		●		●	
External accessories	Rear stud (B-ST)	94	●	●	●	●	●	●		●		●	
External accessories	Plug-in (PM)	94	–	–	–	–	–	–		–		–	
External accessories	IEC 35mm rail mounting adapters	137	●	●	●	●	●	–		–		–	
CE marking			Self-declaration	Self-declaration	Self-declaration	Self-declaration	Self-declaration	Self-declaration		Self-declaration		Self-declaration	
CCC recognition			Recognized	Recognized	Recognized	Recognized	Recognized	Recognized		Recognized		Recognized	
Marine use approval (NK, LR, ABS, GL)			–	–	–	–	–	–		–		–	
Automatic tripping device			Thermal-magnetic	Thermal-magnetic	Thermal-magnetic	Thermal-magnetic	Thermal-magnetic	Thermal-magnetic		Thermal-magnetic		Electronic (effective value detection)	
Trip button			Equipped	Equipped	Equipped	Equipped	Equipped	Equipped		Equipped		Equipped	
Page of Characteristics and dimensions			186		186			188				192	

Notes:
- *1 If using a 3-pole earth leakage cirsuit breaker as a 1-pole 2-phase device, connect the left and right poles and not the central pole. When wiring to single-phase 3-wire, connect the neutral line to the central pole.
- *2 In case of time delay type, rated voltage is 200-440VAC.
- *3 In case of time delay type, rated current is produced with 20 amp. or more.
- *4 When the operating time are 0.45, 1.0 and 2.0 seconds, the Earth Leakage circuit breaker operates between 0.15 and 0.45 seconds, between 0.6 and 1.0 seconds and between 1.2 and 2.0 seconds respectively.
- *5 Cassette type accessories are field mountable type. It can respend to adhesion attachment of a breaker as standard below 250A frame. (excluding UVT.)
- *6 Standard type is SLT equipped.
- *7 Place an order of other models in conjunction with the circuit breaker.
- *8 Not isolation compatible, excluding 400 to 800A frame.
- *9 AC100V does not acquire the CCC certification.

NV-S (Standard class) Harmonic Surge Ready

	225	250	250	400	400	600	630	630	800
	NV250-SV		NV250-SEV	NV400-SW	NV400-SEW	NV630-SW		NV630-SEW	NV800-SEW
	125 150 175 200 225	250	125-250	250 300 350 400	Adjustable 200 225 250 300 350 400	500 600	(630)	Adjustable 300 350 400 500 600 630	Adjustable 400 450 500 600 700 800
	3 / 4	3 / 4	3	3	3 / 4	3	3	3 / 4	3
	3ϕ3W, 1ϕ3W, 1ϕ2W / 3ϕ4W	3ϕ3W, 1ϕ3W, 1ϕ2W / 3ϕ4W	3ϕ3W, 1ϕ2W	3ϕ3W, 1ϕ3W, 1ϕ2W	3ϕ3W, 1ϕ3W, 1ϕ2W / 3ϕ4W	3ϕ3W, 1ϕ3W, 1ϕ2W	3ϕ3W, 1ϕ3W, 1ϕ2W	3ϕ3W, 1ϕ3W, 1ϕ2W / 3ϕ4W	3ϕ3W, 1ϕ3W, 1ϕ2W
	100-440 / 200-440	100-440 / 200-440	100-440	100-440	100-440	200-440	200-440	100-440	200-440
	(30),100/200/500 selectable	(30),100/200/500 selectable	(30),100/200/500 selectable	(30),100/200/500 selectable	(30),100/200/500 selectable	–	–	–	–
	0.1	0.1	0.1	0.1	0.1	–	–	–	–
	0.04	0.04	0.04	0.04	0.04	–	–	–	–
	(100/200/500selectable)	(100/200/500selectable)	(100/200/500selectable)	(100/200/500selectable)	(100/200/500selectable)	100/200/500selectable	100/200/500selectable	(100/200/500selectable)	100/200/500selectable
	(0.45/1.0/2.0selectable)	(0.45/1.0/2.0selectable)	(0.45/1.0/2.0selectable)	(0.45/1.0/2.0selectable)	(0.45/1.0/2.0selectable)	0.45/1.0/2.0selectable	0.45/1.0/2.0selectable	(0.45/1.0/2.0selectable)	0.45/1.0/2.0selectable
	(0.1/0.5/1.0)	(0.1/0.5/1.0)	(0.1/0.5/1.0)	(0.1/0.5/1.0)	(0.1/0.5/1.0)	0.1/0.5/1.0	0.1/0.5/1.0	(0.1/0.5/1.0)	0.1/0.5/1.0
	Mechanical type (button)	Mechanical type (button)	Mechanical type (button)	Mechanical type (button)	Mechanical type (button)	Mechanical type (button)	Mechanical type (button)	Mechanical type (button)	Mechanical type (button)
	36/36	36/36	36/36	42/42	42/42	42/42	42/42	42/42	42/42
	36/36	36/36	36/36	45/45	50/50	50/50	50/50	50/50	50/50
	36/36	36/36	36/36	45/45	50/50	50/50	50/50	50/50	50/50
	85/85	85/85	85/85	85/85	85/85	85/85	85/85	85/85	85/85
	85/85	85/85	85/85	85/85	85/85	85/85	85/85	85/85	85/85
	85/85 / –	85/85 / –	85/85	85/85	85/85	–	–	85/85	–
	6	6	6	8	8	8	8	8	8
	AC	AC	AC	AC	AC	AC	AC	AC	AC
	Compatible	Compatible	Compatible	Compatible	Compatible	Compatible	Compatible	Compatible	Compatible
	Possible	Possible	Possible	Possible	Possible	Possible	Possible	Possible	Possible
	25,000	25,000	25,000	6,000	6,000	6,000	6,000	6,000	4,000
	10,000	10,000	10,000	1,000	1,000	1,000	1,000	1,000	500
	A	A	A	A	B	A	A	B	A
	–	–	–	–	5	–	–	7.6	9.6
	2	2	2	3	3	3	3	3	3
	A	A	A	A	A	A	A	A	A
	105 / 140	105 / 140	105	140	140 / 185	140	140	140 / 185	210
	165	165	165	257	257	257	257	257	275
	68	68	68	103	103	103	103	103	103
	92	92	92	155	155	155	155	155	155
	1.9 / 2.5	1.9 / 2.5	1.9	6.4	6.2 / 8.2	6.9	6.9	7.1 / 8.9	15.3
	●Screw terminal	●Screw terminal	●	●Busbar terminal	●Busbar terminal	●Busbar terminal	●Busbar terminal	●Busbar terminal	●Busbar terminal
	–	–	–	–	–	–	–	–	–
	●Bar stud	●Bar stud	●Bar stud	●Bar stud	●Bar stud	●Bar stud	●Bar stud	●Bar stud	●Bar stud
	–	–	–	–	–	–	–	–	–
	● (*5) / ●	● (*5) / ●	● (*5)	● (*5)	● (*5)	● (*5)	● (*5)	● (*5)	● (*5)
	● (*5) / ●	● (*5) / ●	● (*5)	● (*5)	● (*5)	● (*5)	● (*5)	● (*5)	● (*5)
	● (*5) / ●	● (*5) / ●	● (*5)	● (*5)	● (*5)	● (*5)	● (*5)	● (*5)	● (*5)
	● (*5) / ●	● (*5) / ●	● (*5)	●	●	●	●	●	●
	–	–	–	–	–	–	–	–	–
	● / ●	● / ●	●	●	●	●	●	●	●
	● (*6)	● (*6)	● (*6)	● (*6)	● (*6)	● (*6)	● (*6)	● (*6)	● (*6)
	–	–	●	–	–	–	–	–	–
	–	–	●	–	● / –	–	–	● / –	–
	–	–	●	–	● / –	–	–	● / –	–
	●	●	●	● (*7)	● (*7)	● (*7)	● (*7)	● (*7)	● (*7)
	● / ●	● / ●	●	●	●	●	●	●	●
	● / –	● / –	●	●	●	●	●	●	●
	●	●	●	–	–	–	–	–	–
	●	●	●	●	●	●	●	●	●
	●	●	●	●	●	●	●	●	●
	●	●	●	●	●	●	●	●	●
	●	●	●	●	●	●	●	●	●
	●	●	●	●	●	●	●	●	●
	●	●	●	●	●	●	●	●	●
	–	–	–	–	●	–	–	●	–
	–	–	–	–	–	–	–	–	–
	TÜV approval	TÜV approval	Self-declaration	Self-declaration	Self-declaration	Self-declaration	Self-declaration	Self-declaration	Self-declaration
	Recognized	Recognized	Recognized	Recognized	Recognized	Recognized	Recognized	Recognized	Recognized
	–	–	–	–	–	–	–	–	–
	Thermal-magnetic	Thermal-magnetic	Electronic (effective value detection)	Thermal-magnetic	Electronic (effective value detection)	Thermal-magnetic	Thermal-magnetic	Electronic (effective value detection)	Electronic (effective value detection)
	Equipped	Equipped	Equipped	Equipped	Equipped	Equipped	Equipped	Equipped	Equipped
	190		192	194	196	198		200	202

Remarks: 1. Products with rated current parenthesized are produced when an order is placed.
2. Specify "P-LT" when using a plug-in product with a lead-wire terminal block.
3. The circuit breaker has the rated short-circuit breaking capacity specified in the shaded cells.
4.

Rated operational voltage	Applicable circuit voltage	Available voltage range
100-440V	100/110/200/220/240/254/265/380/400/415/440V	85-484V
200-440V	200/220/240/254/265/380/400/415/440V	170-484V

NV-H / NV-R (High-performance class) Harmonic Surge Ready

Frame (A)			50	60	63	100		125		125		225		250		250
Model			NV63-HV			NV125-HV				NV125-HEV		NV250-HV				NV250-HEV
Image																
Rated current In (A) Rated ambient temperture 40°C			(15) 16 20 (30) 32 40 50	(60)	63	(15) 16 20 (30) 32 40 50 (60) 63 (75) 80 100 (*3)		125		63-125		125 150 175 200 225		250		125-250
Number of poles			3	3	3	3	4	3	4	3	4	3	4	3	4	3
Phase line (*1)			3ϕ3W, 1ϕ3W, 1ϕ2W	3ϕ3W, 1ϕ3W, 1ϕ2W	3ϕ3W, 1ϕ3W, 1ϕ2W	3ϕ3W, 1ϕ3W, 1ϕ2W	3ϕ4W	3ϕ3W, 1ϕ3W, 1ϕ2W	3ϕ4W	3ϕ3W, 1ϕ2W	3ϕ4W	3ϕ3W, 1ϕ3W, 1ϕ2W	3ϕ4W	3ϕ3W, 1ϕ3W, 1ϕ2W	3ϕ4W	3ϕ3W, 1ϕ2W
Rated operational voltage Ue (V) (*2)		AC	100-440	100-440	100-440	100-440	200-440	100-440	200-440	100-440		100-440	200-440	100-440	200-440	100-440
High-speed type	Rated current sensitivity (mA)		30,100/200/500 selectable	30,100/200/500 selectable	30,100/200/500 selectable	30,100/200/500 selectable		30,100/200/500 selectable		(30),100/200/500 selectable		30,100/200/500 selectable		30,100/200/500 selectable		(30),100/200/500 selectable
High-speed type	Max. operating time (s)	at IΔn	0.1	0.1	0.1	0.1		0.1		0.1		0.1		0.1		0.1
High-speed type	Max. operating time (s)	at 5IΔn	0.04	0.04	0.04	0.04		0.04		0.04		0.04		0.04		0.04
Time-delay type	Rated current sensitivity (mA)		–	–	–	(100/200/500selectable)		(100/200/500selectable)		(100/200/500selectable)		(100/200/500selectable)		(100/200/500selectable)		(100/200/500selectable)
Time-delay type	Max. operating time (s) (*4)		–	–	–	(0.45/1.0/2.0selectable)		(0.45/1.0/2.0selectable)		(0.45/1.0/2.0selectable)		(0.45/1.0/2.0selectable)		(0.45/1.0/2.0selectable)		(0.45/1.0/2.0selectable)
Time-delay type	Internal non-operating (s) (or more)		–	–	–	(0.1/0.5/1.0)		(0.1/0.5/1.0)		(0.1/0.5/1.0)		(0.1/0.5/1.0)		(0.1/0.5/1.0)		(0.1/0.5/1.0)
Earth leakage indication system			Mechanical type (button)			Mechanical type (button)		Mechanical type (button)		Mechanical type (button)		Mechanical type (button)		Mechanical type (button)		Mechanical type (button)
Rated short-circuit breaking capacities (kA)	IEC 60947-2 EN 60947-2 (Icu/Ics)	AC 440V	10/8	10/8	10/8	50/38		50/38		65/65		65/65		65/65		65/65
Rated short-circuit breaking capacities (kA)	IEC 60947-2 EN 60947-2 (Icu/Ics)	AC 415V	10/8	10/8	10/8	50/38		50/38		70/70		70/70		70/70		70/70
Rated short-circuit breaking capacities (kA)	IEC 60947-2 EN 60947-2 (Icu/Ics)	AC 400V	10/8	10/8	10/8	50/38		50/38		75/75		75/75		75/75		75/75
Rated short-circuit breaking capacities (kA)	IEC 60947-2 EN 60947-2 (Icu/Ics)	AC 230V	25/19	25/19	25/19	100/75		100/75		100/100		100/100		100/100		100/100
Rated short-circuit breaking capacities (kA)	IEC 60947-2 EN 60947-2 (Icu/Ics)	AC 200V	25/19	25/19	25/19	100/75		100/75		100/100		100/100		100/100		100/100
Rated short-circuit breaking capacities (kA)	IEC 60947-2 EN 60947-2 (Icu/Ics)	AC 100V	25/19	25/19	25/19	100/75	–	100/75	–	100/100		100/100	–	100/100	–	100/100
Rated impulse withstand voltage Uimp (kV)			6	6	6	6		6		6		6		6		6
Current			AC	AC	AC	AC		AC		AC		AC		AC		AC
Suitability for isolation			Compatible	Compatible	Compatible	Compatible		Compatible		Compatible		Compatible		Compatible		Compatible
Reverse connection (below 230VAC)			–	–	–	–		–		–		–		–		–
Number of operating cycles	Without current		15,000	15,000	15,000	25,000		25,000		25,000		25,000		25,000		25,000
Number of operating cycles	With current		8,000	8,000	8,000	10,000		10,000		10,000		10,000		10,000		10,000
Utilization category			A	A	A	A		A		A		A		A		A
Rated short time withstand current Icu (kA) at 0.25s			–	–	–	–		–		–		–		–		–
Pollution degree			2	2	2	2		2		2		2		2		2
EMC environment condition (environment A or B)			A	A	A	A		A		A		A		A		A
Overall dimensions (mm)		a	75	75	75	90	120	90	120	105	140	105	140	105	140	105
Overall dimensions (mm)		b	130	130	130	130		130		165		165		165		165
Overall dimensions (mm)		c	68	68	68	68		68		68		68		68		68
Overall dimensions (mm)		ca	90	90	90	90		90		92		92		92		92
Mass of front-face type (kg)			0.75	0.8	0.8	1.1	1.4	1.1	1.4	1.9	2.5	1.8	2.5	1.8	2.5	1.9
Installation and connections	Front connection (F)	Page	●Screw terminal	●Screw terminal	●Screw terminal	●Screw terminal		●Screw terminal		●		●Screw terminal		●Screw terminal		●
Installation and connections	Solderless (BOX) terminal (SL)	92	–	–	–	–		–		–		–		–		–
Installation and connections	Rear (B)	92	●Round stud	●Round stud	●Round stud	●Bar stud		●Bar stud		●Bar stud		●Bar stud		●Bar stud		●Bar stud
Installation and connections	Plug-in (PM)	92	–	–	–	–		–		–		–		–		–
Cassette-type accessories	Alarm switch (AL)	102	● (*5)	● (*5)	● (*5)	● (*5)	●	● (*5)	●	● (*5)	●	● (*5)	●	● (*5)	●	● (*5)
Cassette-type accessories	Auxiliary switch (AX)	102	● (*5)	● (*5)	● (*5)	● (*5)	●	● (*5)	●	● (*5)	●	● (*5)	●	● (*5)	●	● (*5)
Cassette-type accessories	Shunt trip (SHT)	102	● (*5)	● (*5)	● (*5)	● (*5)	●	● (*5)	●	● (*5)	●	● (*5)	●	● (*5)	●	● (*5)
Cassette-type accessories	Undervoltage trip (UVT)	102	● (*5)	● (*5)	● (*5)	● (*5)	●	● (*5)	●	● (*5)	●	● (*5)	●	● (*5)	●	● (*5)
Cassette-type accessories	Earth leakage alarm switch (EAL)	102	–	–	–	–		–		–		–		–		–
Cassette-type accessories	With lead-wire terminal block (SLT)	114	●	●	●	●	●	●	●	●		●	●	●	●	●
Cassette-type accessories	Test button module (TBM)	115	● (*6)	● (*6)	● (*6)	● (*6)		● (*6)		● (*6)		● (*6)		● (*6)		● (*6)
External accessories	Enclosure Closed (S)	130	–	–	–	–		–		–		–		–		–
External accessories	Enclosure Dustproof (I)	130	–	–	–	–		–		●	–	–		–		●
External accessories	Enclosure Waterproof (W)	130	–	–	–	–		–		●	–	–		–		●
External accessories	Electrical operation device (NFM)	133	–	–	–	●		●		●		●		●		●
External accessories	Mechanical interlock (MI) (*7) Panel mounting	129	●	●	●	●	●	●	●	●		●	●	●	●	●
External accessories	Mechanical interlock (MI) (*7) Breaker mounting	129	●	●	●	●	–	●	–	●	–	●	–	●	–	●
External accessories	Handle lock device LC	127	●	●	●	●		●		●		●		●		●
External accessories	Handle lock device HL	127	●	●	●	●		●		●		●		●		●
External accessories	Handle lock device HL-S	127	●	●	●	●		●		●		●		●		●
External accessories	External operating handle (F)	117	●	●	●	●		●		●		●		●		●
External accessories	External operating handle (V)	117	●	●	●	●		●		●		●		●		●
External accessories	Terminal cover (TC-L, TC-S, TTC, BTC, PTC)	121	●	●	●	●		●		●		●		●		●
External accessories	Rear stud (B-ST)	94	●	●	●	●		●		●		●		●		●
External accessories	Plug-in (PM)	94	–	–	–	–		–		–		–		–		–
External accessories	IEC 35mm rail mounting adapters	137	●	●	●	–		–		–		–		–		–
CE marking			Self-declaration	Self-declaration	Self-declaration	Self-declaration		Self-declaration		Self-declaration		Self-declaration		Self-declaration		Self-declaration
CCC recognition			Recognized	Recognized	Recognized	Recognized		Recognized		Recognized		Recognized		Recognized		Recognized
Marine use approval (NK, LR, ABS, GL)			–	–	–	–		–		–		–		–		–
Automatic tripping device			Thermal-magnetic	Thermal-magnetic	Thermal-magnetic	Thermal-magnetic		Thermal-magnetic		Electronic (effective value detection)		Thermal-magnetic		Thermal-magnetic		Electronic (effective value detection)
Trip button			Equipped	Equipped	Equipped	Equipped		Equipped		Equipped		Equipped		Equipped		Equipped
Page of Characteristics and dimensions			186			188				192		190				192

Notes:
- *1 If using a 3-pole earth leakage cirsuit breaker as a 1-pole 2-phase device, connect the left and right poles and not the central pole. When wiring to single-phase 3-wire, connect the neutral line to the central pole.
- *2 In case of time delay type, rated voltage is 200-440VAC.
- *3 In case of time delay type, rated current is prodused with 20 amp. or more.
- *4 When the operating time are 0.45, 1.0 and 2.0 seconds, the Earth Leakage circuit breaker operates between 0.15 and 0.45 seconds, between 0.6 and 1.0 seconds and between 1.2 and 2.0 seconds respectively.
- *5 Cassette type accessories are field mountable type. It can respend to adhesion attachment of a breaker as standard. (excluding UVT.)
- *6 Standard type is SLT equipped.
- *7 Not isolation compatible.
- *8 AC100V does not acquire the CCC certification.

NV-H / NV-R (High-performance class) Harmonic Surge Ready

	400	400	630	800
	NV400-HEW	NV400-REW	NV630-HEW	NV800-HEW
	Adjustable 200 225 250 300 350 400	Adjustable 200 225 250 300 350 400	Adjustable 300 350 400 500 600 630	Adjustable 400 450 500 600 700 800
	3 / 4	3	3	3
	3ϕ3W, 1ϕ3W, 1ϕ2W / 3ϕ4W	3ϕ3W, 1ϕ3W, 1ϕ2W	3ϕ3W, 1ϕ3W, 1ϕ2W	3ϕ3W, 1ϕ3W, 1ϕ2W
	100-440	100-440	100-440	100-440
	(30), 100/200/500 selectable	(30), 100/200/500 selectable	–	–
	0.1	0.1	–	–
	0.04	0.04	–	–
	(100/200/500 selectable)	(100/200/500 selectable)	(100/200/500 selectable)	(100/200/500 selectable)
	(0.45/1.0/2.0)	(0.45/1.0/2.0)	(0.45/1.0/2.0)	(0.45/1.0/2.0 selectable)
	(0.1/0.5/1.0)	(0.1/0.5/1.0)	(0.1/0.5/1.0)	(0.1/0.5/1.0)
	Mechanical type (button)	Mechanical type (button)	Mechanical type (button)	Mechanical type (button)
	65/65	125/63	65/65	65/65
	70/70	125/63	70/70	70/70
	70/70	125/63	70/70	70/70
	100/100	150/75	100/100	100/100
	100/100	150/75	100/100	100/100
	100/100	150/75	100/100	100/100
	8	8	8	8
	AC	AC	AC	AC
	Compatible	Compatible	Compatible	Compatible
	–	–	–	–
	6,000	6,000	6,000	4,000
	1,000	1,000	1,000	500
	B	B	B	B
	5	5	7.6	9.6
	3	3	3	3
	A	A	A	A
	140 / 185	140	140	210
	257	257	257	275
	103	103	103	103
	155	155	155	155
	6.6 / 8.2	6.6	7.1	15.3
	●Busbar terminal	●Busbar terminal	●Busbar terminal	●Busbar terminal
	–	–	–	–
	●Bar stud	●Bar stud	●Bar stud	●Bar stud
	–	–	–	–
	● (*5)	● (*5)	● (*5)	● (*5)
	● (*5)	● (*5)	● (*5)	● (*5)
	● (*5)	● (*5)	● (*5)	● (*5)
	●	●	●	●
	–	–	–	–
	●	●	●	●
	● (*6)	● (*6)	● (*6)	● (*6)
	–	–	–	–
	● / –	●	●	●
	● / –	●	●	●
	● (*7)	● (*7)	● (*7)	● (*7)
	●	●	●	●
	●	●	●	●
	–	–	–	–
	●	●	●	●
	●	●	●	●
	●	●	●	●
	●	●	●	●
	●	●	●	●
	●	●	●	●
	–	–	–	–
	–	–	–	–
	Self-declaration	Self-declaration	Self-declaration	Self-declaration
	Recognized	Recognized	Recognized	Recognized
	–	–	–	–
	Electronic (effective value detection)	Electronic (effective value detection)	Electronic (effective value detection)	Electronic (effective value detection)
	Equipped	Equipped	Equipped	Equipped
	196	196	200	202

Remarks:
1. Products with rated current parenthesized are produced when an order is placed.
2. The setting is set to 500mA and delivered when not specifying the rated current sensitivity and the time of time-delay type of operation to 2.0 seconds.
3. Specify "FP-LT" when using a flush plate product with a lead-wire terminal block.
4. Specify "P-LT" when using a plug-in product with a lead-wire terminal block.
5. The circuit breaker has the rated short-circuit breaking capacity specified in the shaded cells.
6.

Rated operational voltage	Applicable circuit voltage	Available voltage range
100-440V	100/110/200/220/240/254/265/380/400/415/440V	85-484V
200-440V	200/220/240/254/265/380/400/415/440V	175-484V

NF-MB

Please specify MB

Frame (A)	30	32	50		100	225
Model	NF32-SV		NF63-CV	NF63-SV	NF125-SV	NF250-SV
Rated current In (A) / Rated motor capacity (kW) / Rated ambient temperture 40°C (45°C for marine use)	A / 200/220V kW / 400/440V kW	A / 200/220V kW / 400/440V kW	A / 200/220V kW / 400/440V kW	A / 200/220V kW / 400/440V kW	A / 200/220V kW / 400/440V kW	A / 200/220V kW / 400/440V kW
	25 / 5.5 / 11	32 / 7.5 / 15	45 / 11 / 22	7.1 / 1.5 / –	100 / – / 55	225 / 55 / 110
	16 / 3.7 / 7.5		40 / – / 18.5	5 / – / 2.2	90 / 22 / 45	200 / – / –
	12 / – / 5.5		32 / 7.5 / 15	4 / 0.75 / 1.5	71 / 18.5 / 37	175 / 45 / 90
	10 / 2.2 / –		25 / 5.5 / 11		63 / 15 / 30	150 / 37 / 75
	8 / – / 3.7		16 / 3.7 / 7.5		45 / 11 / 22	125 / 30 / –
	7.1 / 1.5 / –		12 / – / 5.5		(40) / – / 18.5	
	5 / – / 2.2		10 / 2.2 / –		32 / 7.5 / 15	
	4 / 0.75 / 1.5		8 / – / 3.7		(25) / 5.5 / 11	
					(16) / 3.7 / 7.5	
					(12.5) / – / 5.5	
Number of poles	3	3	3	3	3	3
Rated insulation voltage Ui (V)	500	500	500	500	500	500
Rated short-circuit breaking capacities (kA) — IEC 60947-2 EN 60947-2 (Icu/Ics) AC 440V	2.5/2.5	2.5/2.5	2.5/2.5	7.5/7.5	25/25	36/36
415V	2.5/2.5	2.5/2.5	2.5/2.5	7.5/7.5	30/30	36/36
400V	5/5	5/5	5/5	7.5/7.5	30/30	36/36
380V	5/5	5/5	5/5	7.5/7.5	30/30	36/36
230V	7.5/7.5	7.5/7.5	7.5/7.5	15/15	50/50	85/85
Rated impulse withstand voltage Uimp (kV)	8	8	8	8	8	8
Current	AC	AC	AC	AC	AC	AC
Suitability for isolation	Compatible	Compatible	Compatible	Compatible	Compatible	Compatible
Reverse connection	Possible	Possible	Possible	Possible	Possible	Possible
Number of operating cycles — Without current	10,000	10,000	10,000	15,000	25,000	25,000
With current (440VAC)	6,000	6,000	6,000	8,000	10,000	10,000
Utilization category	A	A	A	A	A	A
Pollution degree	3	3	3	3	3	3
EMC environment condition (environment A or B)	N/A	N/A	N/A	N/A	N/A	N/A
Overall dimensions (mm) — a	75	75	75	75	90	105
b	130	130	130	130	130	165
c	68	68	68	68	68	68
ca	90	90	90	90	90	92
Mass of front-face type (kg)	0.65	0.65	0.65	0.7	1.0	1.6
Installation and connections — Front connection (F) — Page	●Screw terminal	●Screw terminal	●Screw terminal	●Screw terminal	●Screw terminal	●Screw terminal
Solderless (BOX) terminal (SL) — 92	–	–	–	–	●	●
Rear (B)	●Round stud	●Round stud	●Round stud	●Round stud	●Bar stud	●Bar stud
Plug-in (PM)	●	●	●	●	●	●
Cassette-type accessories — Alarm switch (AL) — 102	● (*1)	● (*1)	● (*1)	● (*1)	● (*1)	● (*1)
Auxiliary switch (AX)	● (*1)	● (*1)	● (*1)	● (*1)	● (*1)	● (*1)
Shunt trip (SHT)	● (*1)	● (*1)	● (*1)	● (*1)	● (*1)	● (*1)
Undervoltage trip (UVT)	● (*1)	● (*1)	● (*1)	● (*1)	● (*1)	● (*1)
With lead-wire terminal block (SLT) — 114	●	●	●	●	●	●
External accessories — Enclosure — Closed (S) — 130	●	●	●	●	●	●
Dustproof (I)	●	●	●	●	●	●
Waterproof (W)	●	●	●	●	●	●
Electrical operation device (NFM) — 133	–	–	–	–	● (*3)	● (*3)
Mechanical interlock (MI) (*2) — Panel mounting — 129	●	●	●	●	●	●
Breaker mounting	●	●	●	●	●	●
Handle lock device — LC — 127	●	●	●	●	●	●
HL	●	●	●	●	●	●
HL-S	●	●	●	●	●	●
External operating handle — (F) — 117	●	●	●	●	●	●
(V)	●	●	●	●	●	●
Terminal cover (TC-L, TC-S, TTC, BTC, PTC) — 121	●	●	●	●	●	●
Rear stud (B-ST) — 94	●	●	●	●	●	●
Plug-in (PM)	●	●	●	●	●	●
IEC 35mm rail mounting adapters — 137	●	●	●	●	–	–
CE marking	Self-declaration	Self-declaration	Self-declaration	Self-declaration	Self-declaration	TÜV approval
CCC recognition	Recognized	Recognized	Recognized	Recognized	Recognized	Recognized
Marine use approval (NK, LR, ABS, GL)	☆	☆	☆	☆	☆	☆
Automatic tripping device	Thermal-magnetic	Thermal-magnetic	Thermal-magnetic	Thermal-magnetic	Thermal-magnetic	Thermal-magnetic
Trip button	Equipped	Equipped	Equipped	Equipped	Equipped	Equipped
Page of Characteristics and dimensions	142		142		144	152

Notes: *1 The cassette type design makes it easy for customer to install. Available for installation on side (excluding UVT).
*2 Not isolation compatible.
*3 Place an order of other models in conjunction with the circuit breaker.

Remarks: 1. The motor circuit breakers do not have an applicable rated motor capacity. Select a motor circuit breaker based on the total load current of the motor.
2. Products with rating parenthesized are produced when an order is placed.
3. Specify "P-LT" when using a plug-in product with a lead wire terminal block.
4. The circuit breaker has the rated short circuit breaking capacity specified in the shaded cells.
5. Please refer to "Table 4-17", of Page 73 for details.

UL 489 Listed Molded Case Circuit Breakers

Frame (A)				50		100		125					
Model				NF50-SVFU		NF100-CVFU		NF125-SVU				NF125-HVU	
Image													
Rated current In (A) (*4) Rated ambient temperture 40°C (IEC 30°C)				(3) 5 10 15 20 30 40 50		60 (70) 75 (80) (90) 100		15 20 30 40 50 60 (70) 75 (80) (90) 100		125		15 20 30 40 50 60 (70) 75 (80) (90) 100	125
Number of poles				2	3	2	3	2	3	2	3	3	3
Rated short-circuit breaking capacities (kA)	UL 489 CSA C22.2 No.5-02	Rated voltage	AC (V)	240		240		480		480		600Y/347	600Y/347
			DC (V)	–		–		–		–		–	–
		AC	600Y/347V	–		–		–		–		18	18
			480V	–		–		30		30		50	50
			480Y/277V	–		–		–		–		–	–
			240V	14		14		50		50		100	100
			120V	–		–		–		–		–	–
		DC	60V	–		–		–		–		–	–
	IEC 60947-2 EN 60947-2 (Icu/Ics)	Rated insulation voltage Ui (V)		440		600		690		690		690	690
		AC	690V	–		–		8/4		8/4		10/5	10/5
			500V	–		7.5/4		18/9		18/9		25/13	25/13
			440V	7.5/4		10/5		30/15		30/15		50/25	50/25
			415V	10/5		10/5		30/15		30/15		50/25	50/25
			400V	10/5		10/5		30/15		30/15		50/25	50/25
			380V	10/5		10/5		30/15		30/15		50/25	50/25
			230V	15/8		15/8		50/25		50/25		100/50	100/50
		DC	250V	–		–		–		–		–	–
			60V	–		–		–		–		–	–
Rated impulse withstand voltage Uimp (kV)				6		8		8		8		8	8
Current (*1)				AC		AC		AC		AC		AC	AC
Suitability for isolation				Compatible		Compatible		Compatible		Compatible		Compatible	Compatible
Reverse connection				–		Possible		Possible		Possible		Possible	Possible
Utilization category				A		A		A		A		A	A
Pollution degree				3		3		3		3		3	3
EMC environment condition (environment A or B)				N/A		N/A		N/A		N/A		N/A	N/A
Overall dimensions (mm)			a	36	54	50	75	90		90		90	90
			b	120		150		160		160		160	160
			c	68		68		68		68		68	68
			ca	90		90		90		90		90	90
Mass of front-face type (kg)				0.3	0.45	0.55	0.8	1.0	1.1	1.0	1.1	1.1	1.1
Installation and connections	Front (F)	Screw terminal	(AMP-N)	Page	●		●		●		●		●	●
		Solderless terminal	(SL)	92	–		●		●		●		●	●
		Bar	(BAR)		–		● (*5)		●		●		●	●
		Power supply solderless load bar	(SL/BAR)		–		● (*5, 6)		● (*6)		● (*6)		● (*6)	● (*6)
Cassette-type accessories (*2)	Alarm switch		(AL)	102	● (*7)		● (*7)		● (*7)		● (*7)		● (*7)	● (*7)
	Auxiliary switch		(AX)		● (*7)		● (*7)		● (*7)		● (*7)		● (*7)	● (*7)
	Shunt trip		(SHT)		● (*7)		● (*7)		● (*7)		● (*7)		● (*7)	● (*7)
	Undervoltage trip		(UVT)		●		● (*7)		● (*7)		● (*7)		● (*7)	● (*7)
	With lead-wire terminal block		(SLT)	114	●		●		●		●		●	●
External accessories (*2)	Mechanical interlock		(MI)	129	–		–		–		–		–	–
	Handle lock device		(HL)	127	●		●		●		●		●	●
			(HL-S)		●		●		●		●		●	●
	External operating handle		(F)	117	●		●		●		●		●	●
			(V)		●		●		●		●		●	●
	Terminal cover	Large terminal cover	(TC-L)	121	●		●		●		●		●	●
		Small terminal cover	(TC-S)	122	– (*3)		– (*3)		– (*3)		– (*3)		– (*3)	– (*3)
	IEC 35mm rail mounting adapters			137	Standard accessory		Standard accessory		–		–		–	–
CE marking					TÜV approval		TÜV approval		TÜV approval		TÜV approval		TÜV approval	TÜV approval
CCC recognition					Recognized		Recognized		Recognized		Recognized		Recognized	Recognized
Automatic tripping device					Thermal-magnetic		Thermal-magnetic		Thermal-magnetic		Thermal-magnetic		Thermal-magnetic	Thermal-magnetic
Trip button					Equipped		Equipped		Equipped		Equipped		Equipped	Equipped
Page of Characteristics and dimensions					204		206		208				208	

Notes:
- *1 The trip action characteristics differ between AC and DC for products that are compatible with both AC and DC.
- *2 These accessories differ from the general and CE/CCC products in specifications. Please consult us for details.
- *3 The standard structure conforms to IP20 (finger protection).
- *4 The rated ambient temperature for NF50-SVFU, NF100-CVFU, NF125-SVU and NF125-HVU is specified at 40°C also by IEC.
- *5 The circuit breakers with busbar terminals have insulation barriers.
- *6 Circuit breakers for power supply solderless load screw terminal (SL/AMP-N) are available. In this case, a busbar terminal is not provided on the load side.
- *7 These cassette type circuit breakers can be installed by the customer. They can be installed with their side faces in close contact (except NF50-SVFU and UVT).

Remarks:
1. Products with rated current parenthesized are produced when an order is placed.
2. The circuit breaker has the rated short-circuit breaking capacity specified in the shaded cells.
3. The 3-pole circuit breakers can be used on single-phase circuits.

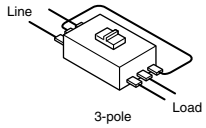

US UL Standard 489	
UL File No.E167691	Body
UL File No.E108284	Accessories

Canada CSA Standard
C22.2 No.5

UL 489 Listed Molded Case Circuit Breakers

Frame (A)				225	250			
Model				NF225-CWU	NF250-SVU		NF250-HVU	
Image								
Rated current In (A) (*5) Rated ambient temperture 40°C (IEC 30°C)				125 150 175 200 225	125 150 175 200 225	250	125 150 175 200 225	250
Number of poles				3	3	3	3	3
Rated short-circuit breaking capacities (kA)	UL 489 CSA C22.2 No.5-02	Rated voltage	AC (V)	240	480	480	600Y/347	600Y/347
			DC (V)	–	–	–	–	–
		AC	600Y/347V	–	–	–	18	18
			480V	–	35	35	50	50
			480Y/277V	–	–	–	–	–
			240V	35	65	65	100	100
			120V	–	–	–	–	–
		DC	60V	–	–	–	–	–
	IEC 60947-2 EN 60947-2 (Icu/Ics)	Rated insulation voltage Ui (V)		600	690	690	690	690
		AC	690V	–	8/4	8/4	10/5	10/5
			500V	10/5	25/13	25/13	36/18	36/18
			440V	15/8	36/18	36/18	50/25	50/25
			415V	18/9	36/18	36/18	50/25	50/25
			400V	18/9	36/18	36/18	50/25	50/25
			380V	18/9	36/18	36/18	50/25	50/25
			230V	35/18	65/33	65/33	100/50	100/50
		DC	250V (*3)	10/5	–	–	–	–
			60V	–	–	–	–	–
Rated impulse withstand voltage Uimp (kV)				6	8	8	8	8
Current (*1)				AC/DC compatible	AC	AC	AC	AC
Suitability for isolation				Compatible	Compatible	Compatible	Compatible	Compatible
Reverse connection				Possible	Possible	Possible	Possible	Possible
Utilization category				A	A	A	A	A
Pollution degree				3	3	3	3	3
EMC environment condition (environment A or B)				N/A	N/A	N/A	N/A	N/A
Overall dimensions (mm)	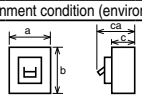		a	105	105	105	105	105
			b	165	185	185	185	185
			c	68	68	68	68	68
			ca	92	92	92	92	92
Mass of front-face type (kg)				1.5	1.6	1.6	1.6	1.6
Installation and connections	Front (F)	Screw terminal	(AMP-N)	●	●	●	●	●
		Solderless terminal	(SL)	–	●	●	●	●
		Bar	(BAR)	●	●	●	●	●
		Power supply solderless load bar	(SL/BAR)	–	●(*8)	●(*8)	●(*8)	●(*8)
Cassette-type accessories (*2)	Alarm switch		(AL)	●	●(*7)	●(*7)	●(*7)	●(*7)
	Auxiliary switch		(AX)	●	●(*7)	●(*7)	●(*7)	●(*7)
	Shunt trip		(SHT)	●	●(*7)	●(*7)	●(*7)	●(*7)
	Undervoltage trip		(UVT)	●	●(*7)	●(*7)	●(*7)	●(*7)
	With lead-wire terminal block		(SLT)	●	●	●	●	●
External accessories (*2)	Mechanical interlock		(MI)	●(*6)	–	–	–	–
	Handle lock device		(HL)	●	●	●	●	●
			(HL-S)	●	●	●	●	●
	External operating handle		(F)	●	●	●	●	●
			(V)	●	●	●	●	●
	Terminal cover	Large terminal cover	(TC-L)	●	●	●	●	●
		Small terminal cover	(TC-S)	– (*4)	– (*4)	– (*4)	– (*4)	– (*4)
	IEC 35mm rail mounting adapters			–	–	–	–	–
CE marking				TÜV approval	TÜV approval	TÜV approval	TÜV approval	TÜV approval
CCC recognition				Recognized	Recognized	Recognized	Recognized	Recognized
Automatic tripping device				Thermal-magnetic	Thermal-magnetic	Thermal-magnetic	Thermal-magnetic	Thermal-magnetic
Trip button				Equipped	Equipped	Equipped	Equipped	Equipped
Page of Characteristics and dimensions				210	212		212	

Notes:
- *1 The trip action characteristics differ between AC and DC for products that are compatible with both AC and DC.
- *2 These accessories differ from the general products in specifications. Please consult us for details.
- *3 When using a 3-pole circuit breaker, use two poles. When wired as shown right, NF225-CWU can be used at up to 400 V DC.
- *4 Since NF225-CWU comes with a protective cover, it has an IP20 (finger protection) structure as standard. Other models have IP20 (finger protection) structures as standard.
- *5 The rated ambient temperature for NF250-SVU and NF250-HVU is specified at 40°C also by IEC.
- *6 Not isolation compatible.
- *7 These cassette type circuit breakers can be installed by the customer. They can be installed with their side faces in close contact (except UVT).
- *8 Circuit breakers for power supply solderless load screw terminal (SL/AMP-N) are available. In this case, a busbar terminal is not provided on the load side.

Remarks:
1. Products with rated current parenthesized are produced when an order is placed.
2. The circuit breaker has the rated short-circuit breaking capacity specified in the shaded cells.
3. The 3-pole circuit breakers can be used on single-phase circuits.

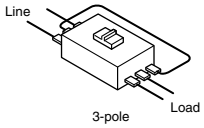

US UL Standard 489	
UL File No.E167691	Body
UL File No.E108284	Accessories

Canada CSA Standard
C22.2 No.5

UL 489 Listed Molded Case Circuit Breakers

Frame (A)				400		630	
Model				NF400-SWU	NF400-HWU	NF630-SWU	NF630-HWU
Image							
Rated current In (A) Rated ambient temperture 40°C				250 300 350 400	250 300 350 400	500 600 630	500 600 630
Number of poles				3	3	3	3
Rated short-circuit breaking capacities (kA)	UL 489 CSA C22.2 No.5-02	Rated voltage	AC (V)	600Y/347	600Y/347	600Y/347	600Y/347
			DC (V)	–	–	–	–
		AC	600Y/347V	20	25	20	25
			480V	35	65	35	65
			480Y/277V	–	–	–	–
			240V	65	100	85	100
			120V	–	–	–	–
		DC	60V	–	–	–	–
	IEC 60947-2 EN 60947-2 (Icu/Ics)	Rated insulation voltage Ui (V)		690	690	690	690
		AC	690V	10/10(5/5)(*4)	15/10	10/10	15/10
			500V	30/30(25/25)(*4)	42/42	30/30	42/42
			440V	42/42(36/36)(*4)	65/65	42/42	65/65
			415V	45/45(36/36)(*4)	70/70	45/45	70/70
			400V	45/45(36/36)(*4)	70/70	45/45	70/70
			380V	50/50(42/42)(*4)	70/70	50/50	70/70
			230V	85/85(65/65)(*4)	100/100	85/85	100/100
		DC	250V	–	–	–	–
			60V	–	–	–	–
Rated impulse withstand voltage Uimp (kV)				8	8	8	8
Current				AC	AC	AC	AC
Suitability for isolation				Compatible	Compatible	Compatible	Compatible
Reverse connection				Possible	Possible	Possible	Possible
Utilization category				A	A	A	A
Pollution degree				3	3	3	3
EMC environment condition (environment A or B)				N/A	N/A	N/A	N/A
Overall dimensions (mm)	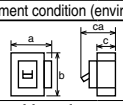		a	140	140	210	210
			b	257	257	275	275
			c	103	103	103	103
			ca	155	155	155	155
Mass of front-face type (kg)				5.7	5.7	9.6	9.6
Installation and connections	Front (F)	Screw terminal	(AMP-N) Page	–	–	–	–
		Solderless terminal	(SL) 92	●	–	●(*7)	–
		Bar	(BAR) 92	●(*5)	●(*5)	●(*5)	●(*5)
		Power supply solderless load bar	(SL/BAR) 92	●(*5)	–	●(*5)	–
Cassette-type accessories	Alarm switch		(AL) 102	●(*3)	●(*3)	●(*3)	●(*3)
	Auxiliary switch		(AX) 102	●(*3)	●(*3)	●(*3)	●(*3)
	Shunt trip		(SHT) 102	●(*3)	●(*3)	●(*3)	●(*3)
	Undervoltage trip		(UVT) 102	●	●	●	●
	With lead-wire terminal block		(SLT) 114	●	●	●	●
External accessories	Mechanical interlock		(MI) 129	●(*1)(*2)	●(*1)(*2)	●(*1)(*2)	●(*1)(*2)
	Handle lock device		(HL) 127	●(*6)	●(*6)	●(*6)	●(*6)
			(HL-S) 127	–	–	–	–
	External operating handle		(F) 117	●	●	●	●
			(V) 117	●	●	●	●
	Terminal cover	Large terminal cover	(TC-L) 121	●	●	●	●
		Small terminal cover	(TC-S) 122	–	–	–	–
	IEC 35mm rail mounting adapters		137	–	–	–	–
CE marking				TÜV approval	TÜV approval	TÜV approval	TÜV approval
CCC recognition				Recognized	Recognized	Recognized	Recognized
Automatic tripping device				Thermal-magnetic	Thermal-magnetic	Thermal-magnetic	Thermal-magnetic
Trip button				Equipped	Equipped	Equipped	Equipped
Page of Characteristics and dimensions				214	214	216	216

Notes:
- *1 Not isolation compatible.
- *2 Not acquire the TÜV certification.
- *3 Cassette type accessories are field mountable type. It can respend to adhesion attachment of a breaker as standard below 250A frame. (excluding UVT.)
- *4 The values in parentheses apply to the circuit breakers with solderless terminals.
- *5 The circuit breakers with busbar terminals have insulation barriers.
- *6 Please consult us. (Models which are not UL or TUV certified but can be locked in the ON and OFF positions are available.)
- *7 Not available for 630A.

Remarks:
1. The circuit breaker has the rated short-circuit breaking capacity specified in the shaded cells.
2. The 3-pole circuit breakers can be used on single-phase circuits.

US UL Standard 489	
UL File No.E167691	Body
UL File No.E108284	Accessories

Canada CSA Standard
C22.2 No.5

UL 489 Listed Earth Leakage Circuit Breakers (Harmonic Surge Ready)

Frame (A)	50		100	125				250			
Model	NV50-SVFU		NV100-CVFU	NV125-SVU		NV125-HVU		NV250-SVU		NV250-HVU	
Image											
Rated current In (A) Rated ambient temperture 40°C	(5) (10) 15 20 30 40 50		60 (70) 75 (80) (90) 100	15 20 30 (40) 50 60 75 100	125	15 20 30 (40) 50 60 75 100	125	125 150 175 200 225	250	125 150 175 200 225	250
Number of poles	2	3	3	3	3	3	3	3	3	3	3
Phase line (*1)	1ϕ2W	3ϕ3W, 1ϕ2W	3ϕ3W, 1ϕ2W	3ϕ3W, 1ϕ2W	3ϕ3W, 1ϕ2W	3ϕ3W, 1ϕ2W	3ϕ3W, 1ϕ2W	3ϕ3W, 1ϕ2W	3ϕ3W, 1ϕ2W	3ϕ3W, 1ϕ2W	3ϕ3W, 1ϕ2W
Rated operational voltage AC V — UL 489	120-240		120-240	120-480	120-480	120-480	120-480	120-480	120-480	120-480	120-480
Rated operational voltage AC V — IEC 60947-2 EN 60947-2	100-240	100-440	100-440	100-440	100-440	100-440	100-440	100-440	100-440	100-440	100-440
High-speed type — Rated current sensitivity I△n mA	30 50	30 50 100	30, 50, 100/200/500 selectable	30, 50, 100/200/500 selectable	30, 50, 100/200/500 selectable	30, 50, 100/200/500 selectable	30, 50, 100/200/500 selectable	30, 50, 100/200/500 selectable	30, 50, 100/200/500 selectable	30, 50, 100/200/500 selectable	30, 50, 100/200/500 selectable
High-speed type — Pickup current, UL 1053	75% of I△n		75% of I△n	75% of I△n	75% of I△n	75% of I△n	75% of I△n	75% of I△n	75% of I△n	75% of I△n	75% of I△n
High-speed type — Max. operating time (s) at 5I△n (*4)	0.04		0.04	0.04	0.04	0.04	0.04	0.04	0.04	0.04	0.04
Earth leakage indication system	Display window		Mechanical type (button)	Mechanical type (button)	Mechanical type (button)	Mechanical type (button)	Mechanical type (button)	Mechanical type (button)	Mechanical type (button)	Mechanical type (button)	Mechanical type (button)
Rated short-circuit breaking capacities (kA) — UL 489 CSA C22.2 No.5-02 AC 480V	–		–	30	30	50	50	35	35	50	50
UL 489 CSA C22.2 No.5-02 AC 240V	14		14	50	50	100	100	65	65	100	100
UL 489 CSA C22.2 No.5-02 AC 120V	14		14	50	50	100	100	65	65	100	100
IEC 60947-2 EN 60947-2 (Icu/Ics) AC 440V	–	7.5/4	10/5	30/15	30/15	50/25	50/25	36/18	36/18	50/25	50/25
IEC 60947-2 EN 60947-2 (Icu/Ics) AC 400V	–	10/5	10/5	30/15	30/15	50/25	50/25	36/18	36/18	50/25	50/25
IEC 60947-2 EN 60947-2 (Icu/Ics) AC 230V	15/8	15/8	15/8	50/25	50/25	100/50	100/50	65/33	65/33	100/50	100/50
IEC 60947-2 EN 60947-2 (Icu/Ics) AC 100V	15/8	15/8	15/8	50/25	50/25	100/50	100/50	65/33	65/33	100/50	100/50
Rated impulse withstand voltage Uimp (kV)	4	6	6	6	6	6	6	6	6	6	6
Suitability for isolation	Compatible		Compatible	Compatible	Compatible	Compatible	Compatible	Compatible	Compatible	Compatible	Compatible
Reverse connection (below 240VAC)	–		Possible	Possible	Possible	Possible	Possible	Possible	Possible	Possible	Possible
Utilization category	A		A	A	A	A	A	A	A	A	A
Pollution degree	2		2	2	2	2	2	2	2	2	2
EMC environment condition (environment A or B)	A		A	A	A	A	A	A	A	A	A
Overall dimensions (mm) — a	36	54	75	90	90	90	90	105	105	105	105
Overall dimensions (mm) — b	120		150	160	160	160	160	185	185	185	185
Overall dimensions (mm) — c	68		68	68	68	68	68	68	68	68	68
Overall dimensions (mm) — ca	90		90	90	90	90	90	92	92	92	92
Mass of front-face type (kg)	0.4	0.5	0.9	1.2	1.2	1.2	1.2	1.8	1.8	1.8	1.8
Installation and connections — Front (F) Screw terminal (AMP-N) Page	●		●	●	●	●	●	●	●	●	●
Installation and connections — Front (F) Solderless terminal (SL) 92	–		●	●	●	●	●	●	●	●	●
Installation and connections — Front (F) Bar (BAR) 92	–		●(*5)	●	●	●	●	●	●	●	●
Installation and connections — Front (F) Power supply solderless load bar (SL/BAR) 92	–		●(*5, *6)	●(*6)	●(*6)	●(*6)	●(*6)	●(*6)	●(*6)	●(*6)	●(*6)
Cassette-type accessories (*2) — Alarm switch (AL) 102	–	●(*8)	●(*8)	●(*8)	●(*8)	●(*8)	●(*8)	●(*8)	●(*8)	●(*8)	●(*8)
Cassette-type accessories (*2) — Auxiliary switch (AX) 102	–	●(*8)	●(*8)	●(*8)	●(*8)	●(*8)	●(*8)	●(*8)	●(*8)	●(*8)	●(*8)
Cassette-type accessories (*2) — Shunt trip (SHT) 102	–	●(*8)	●(*8)	●(*8)	●(*8)	●(*8)	●(*8)	●(*8)	●(*8)	●(*8)	●(*8)
Cassette-type accessories (*2) — Undervoltage trip (UVT) 102	–	●	●(*8)	●(*8)	●(*8)	●(*8)	●(*8)	●(*8)	●(*8)	●(*8)	●(*8)
Cassette-type accessories (*2) — With lead-wire terminal block (SLT) 114	–	●	●	●	●	●	●	●	●	●	●
Cassette-type accessories (*2) — Test button module (TBM) 115	●(*9)		–	●(*9)	●(*9)	●(*9)	●(*9)	●(*9)	●(*9)	●(*9)	●(*9)
External accessories (*2) — Mechanical interlock (MI) 129	–		–	–	–	–	–	–	–	–	–
External accessories (*2) — Handle lock device (HL) 127	●		●	●	●	●	●	●	●	●	●
External accessories (*2) — Handle lock device (HL-S) 127	●		●	●	●	●	●	●	●	●	●
External accessories (*2) — External operating handle (F) 117	●		●	●	●	●	●	●	●	●	●
External accessories (*2) — External operating handle (V) 117	●		●	●	●	●	●	●	●	●	●
External accessories (*2) — Terminal cover: Large terminal cover (TC-L) 121	●		●	●	●	●	●	●	●	●	●
External accessories (*2) — Terminal cover: Small terminal cover (TC-S) 122	●(*3)		– (*3)	– (*3)	– (*3)	– (*3)	– (*3)	– (*3)	– (*3)	– (*3)	– (*3)
External accessories (*2) — IEC 35mm rail mounting adapters 137	Standard accessory		Standard accessory	–	–	–	–	–	–	–	–
CE marking	TÜV approval		TÜV approval	TÜV approval	TÜV approval	TÜV approval	TÜV approval	TÜV approval	TÜV approval	TÜV approval	TÜV approval
CCC recognition	Recognized		Recognized	Recognized	Recognized	Recognized	Recognized	Recognized	Recognized	Recognized	Recognized
Automatic tripping device	Thermal-magnetic		Thermal-magnetic	Thermal-magnetic	Thermal-magnetic	Thermal-magnetic	Thermal-magnetic	Thermal-magnetic	Thermal-magnetic	Thermal-magnetic	Thermal-magnetic
Trip button	Equipped		Equipped	Equipped	Equipped	Equipped	Equipped	Equipped	Equipped	Equipped	Equipped
Page of Characteristics and dimensions	204		206	208		208		212		212	

Notes:
- *1 If using a 3-pole earth leakage circuit breaker as a 1-pole 2-phase device, connect the left and right poles and not the central pole.
- *2 These are different from general models in specifications. Consult us for the details.
- *3 The standard structure conforms to IP20 (finger protection).
- *4 The maximum operating time is 0.1 according to UL 1053.
- *5 The circuit breakers with busbar terminals have insulation barriers.
- *6 Circuit breakers for power supply solderless load screw terminal (SL/AMP-N) are available. In this case, a bar terminal is not provided on the load side.
- *7 Circuit breakers for 100 V AC do not have obtained CCC certificate.
- *8 These cassette type accessories can be installed by the customer. They can be installed with their side faces in close contact with circuit breakers (except NV50-SVFU and UVT).
- *9 Standard type is SLT equipped.

Remarks:
1. Products with rated current parenthesized are produced when an order is placed.
2.

Rated operational voltage	Applicable circuit voltage	Available voltage range
120-240V (UL)	120/240V	66-264V
120-240-480V (UL)	120/240/480V	66-528V
240V (UL)	240V	132-264V
100-230V (IEC)	100/110/200/220/230V	85-253V
100-240V (IEC)	100/110/200/220/230/240V	85-264V
100-230-400-440V (IEC) 100-440V (IEC)	100/110/200/220/ 230/240/254/265/ 380/400/415/440V	85-484V
230-400-440V (IEC)	230/240/254/265/ 380/400/415/440V	195-484V

US UL Standard 489	
UL File No.E167691	Body
UL File No.E108284	Accessories

Canada CSA Standard
C22.2 No.144
C22.2 No.5

MDU Breakers

Frame (A)	250				400				630				800			
Model	NF250-SEV with MDU		NF250-HEV with MDU		NF400-SEP with MDU		NF400-HEP with MDU		NF630-SEP with MDU		NF630-HEP with MDU		NF800-SEP with MDU		NF800-HEP with MDU	
Image																
Rated current In (A) Rated ambient temperture 40°C	Adjustable 125-250A (12.5A Step)				Adjustable 200 225 250 300 350 400				Adjustable 300 350 400 500 600 630				Adjustable 400 450 500 500 600 700 800			
Number of poles	3	4	3	4	3	4	3	4	3	4	3	4	3	4	3	4
Phase line	3φ3W, 1φ3W, 1φ2W	3φ4W	3φ3W, 1φ3W, 1φ2W	3φ4W	3φ3W, 1φ3W, 1φ2W	3φ4W	3φ3W, 1φ3W, 1φ2W	3φ4W	3φ3W, 1φ3W, 1φ2W	3φ4W	3φ3W, 1φ3W, 1φ2W	3φ4W	3φ3W, 1φ3W, 1φ2W	3φ4W	3φ3W, 1φ3W, 1φ2W	3φ4W
Rated insulation voltage Ui (V)	690				690				690				690			
Rated short-circuit breaking capacities (kA) — IEC 60947-2 (Icu/Ics) — AC — 690V	8/8		10/8		10/10		10/10		10/10		15/15		10/10		15/15	
500V	18/18		30/23		30/30		50/50		30/30		50/50		30/30		50/50	
440V	36/36		50/50		42/42		65/65		42/42		65/65		42/42		65/65	
415V	36/36		70/70		45/45		70/70		45/45		70/70		45/45		70/70	
400V	36/36		75/75		45/45		70/70		45/45		70/70		45/45		70/70	
380V	36/36		75/75		45/45		70/70		45/45		70/70		45/45		70/70	
230V	85/85		100/100		85/85		100/100		85/85		100/100		85/85		100/100	
200V	85/85		100/100		85/85		100/100		85/85		100/100		85/85		100/100	
100V	–		–		–		–		–		–		–		–	
Rated impulse withstand voltage Uimp (kV)	8				8				8				8			
Current	AC				AC				AC				AC			
Suitability for isolation	Compatible				Compatible				Compatible				Compatible			
Reverse connection (below 240VAC)	–				–				–				–			
Number of operating cycles — Without current	25,000				6,000				6,000				4,000			
Number of operating cycles — With current	10,000				1,000				1,000				500			
Utilization category	A				B				B				B			
Pollution degree	3				3				3				3			
EMC environment condition (environment A or B)	A				A				A				A			
Overall dimensions (mm) — a	105	140	105	140	140	185	140	185	210	280	210	280	210	280	210	280
b	165				257				275				275			
c	68				103				103				103			
ca	92				155				155				155			
Mass of front-face type (Breaker mounting) (kg)	1.8	2.3	1.8	2.3	6.2	8	6.2	8	10.7	13.8	10.7	13.8	11.1	14.4	11.1	14.4
MDU installation	Breaker mounting, Panel mounting (*1)				Breaker mounting, Panel mounting (*2)											
Installation and connections — Front (F) — Page 92	●	●	●	●	●				●				●			
Rear (*3) (B)	●	●	●	●	●				●				●			
Plug-in (PM)	–				–				–				–			
Cassette-type accessories — Alarm switch (AL) — 102	●(*4)	●	●(*4)	●	●(*4)				●(*4)				●(*4)			
Auxiliary switch (AX)	●(*4)	●	●(*4)	●	●(*4)				●(*4)				●(*4)			
Shunt trip (SHT)	●(*4)	●	●(*4)	●	●(*4)				●(*4)				●(*4)			
Undervoltage trip (UVT)	●	●	●	●	●				●				●			
MDU transform AL, AX, AL + AX (MG)	●(*4)	●	●(*4)	●	●(*4)				●(*4)				●(*4)			
With lead-wire terminal block (SLT) — 114	●	●	●	●	●				●				●			
Alarm contact output (*5) — Pre-alarm (PAL) — 116	● PAL 1a				● PAL 1a				● PAL 1a				● PAL 1a			
Alarm contact output (*5) — Trip-indicator (TI)	–				● PAL 1a, OAL 1a				● PAL 1a, OAL 1a				● PAL 1a, OAL 1a			
External accessories (*2) — Electrical operation device (*6) (NFM) — 133	Available only for the MDU panel mounting type				Available only for the MDU panel mounting type. Disavailable alarm contact output.											
Mechanical interlock (MI) (*7) — Panel mounting — 129	●				●				●				●			
Mechanical interlock (MI) (*7) — Breaker mounting	●(*9)	–	●(*9)	–	Available only for the MDU panel mounting type											
Handle lock device — LC — 127	●				–				–				–			
Handle lock device — HL	●				●				●				●			
Handle lock device — HL-S	Available only for the MDU panel mounting type															
External operating handle (F) — 117	Available only for the MDU panel mounting type															
External operating handle (V)	Available only for the MDU panel mounting type															
Terminal cover — TC-L — 121	●(*8)	●	●(*8)	●	Available only for the MDU panel mounting type											
Terminal cover — TC-S	●(*8)	●	●(*8)	●	–											
Terminal cover — TTC	●(*8)	●(*8)	●(*8)	●(*8)	●(*8)											
Terminal cover — BTC	●(*8)	●	●(*8)	●	Available only for the MDU panel mounting type and line side											
Rear stud (B-ST) — 94	●	●(*8)	●	●	–				–				–			
Automatic tripping device	Electronic (effective value detection)				Electronic (effective value detection)				Electronic (effective value detection)				Electronic (effective value detection)			
MDU measurement specifications	See. 36															
Trip button	Equipped				Equipped				Equipped				Equipped			
Page of Characteristics and dimensions	218				220				222				222			

Notes:
*1 In the case of panel mounting, the panel holder plate, the screws and the MDU connection cable (2m) are packed as standard. The MDU connection cable of 0.5m, 3m, 5m and 10m can be specified when ordering. And dimension of the front panel drilling of the breaker is different between breaker mounting and panel mounting.
*2 In the case of panel mounting, the panel holder plate, the nuts and the MDU connection cable (2m) are packed as standard. The MDU connection cable of 0.5m, 3m, 5m and 10m can be specified when ordering.
*3 For 250AF breakers, the studs are packed as standard. For 400/630/800AF breakers, please specify the installation angle of the studs because it is installed to the breaker before shipping.
*4 It can be installed to the breaker by each customer.
*5 In the case of the breaker with alarm contact output, the module (terminal) is attached to the right side of the breaker and the control power (AC/DC 100-240V 50-60Hz 5VA) is needed. The Output function for alarm output of PAL can set “Self-holding” or “Auto-reset”. Default setup is “Auto-reset”.
*6 For 250AF of electrical operation device, AL is used for the trip indication as standard. The breaker with alarm output contact is not available.
*7 Not isolation compatible.
*8 In the case of breaker mounting, the terminal cover is special type for MDU breaker.
*9 Available only for the MDU panel mounting type.

Measuring Display Unit Breakers (Circuit Breakers with Measuring Display Unit)

●Three major features of Measuring Display Unit Breakers

1. Saving of space and labor for installation
2. Improved and diversified functions
3. Provision of total cost advantages

Measuring Display Unit Breakers with built-in VT and CT and Measuring Display Unit realize measurement, display and transmission of electric circuit information in small space with less installation and wiring work and provide total cost advantages.
The Measuring Display Unit Breakers full of functions in small bodies are suitable for monitoring and protection of electric circuits and maintenance of equipment. A wide variety of models applicable to various networks supports the customers' energy saving activities through detailed energy control as energy saving supporting devices.

●Simply realizing measurement and monitoring of electric circuits for supporting various types of energy saving control

The circuit breakers measure and display the load current, line voltage, electric power, electric energy, harmonic current, leak current and power factor to realize detailed energy control. They support customers' energy saving control.

WS-V Series Measuring Display Unit Breakers

Applicable models
NF250-SEV with MDU, NF250-HEV with MDU

●The measuring display unit can be installed on the body or panel.

【Examples of installation of measuring display unit】

Breaker mounting	Panel mounting
	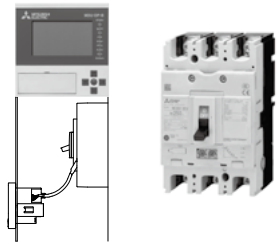

Note: The size of holes in the face board of the circuit breaker body varies depending on whether the measuring display unit is installed on the body or the panel.

◆Model list

Model type	Type name
CC-Link communication	MDU-DP-C
Electric energy pulse output	MDU-DP-P
No transmission	MDU-DP-N

◆Measuring Display Unit cable list

Type name	Cable length
MDU-DP-CB-2M	2m
MDU-DP-CB-3M	3m
MDU-DP-CB-5M	5m
MDU-DP-CB-10M	10m

W & WS Series Measuring Display Unit Breakers

Applicable models
NF400-SEP with MDU, NF400-HEP with MDU, NF630-SEP with MDU, NF630-HEP with MDU, NF800-SEP with MDU, NF800-HEP with MDU

●The measuring display unit can be installed on the body or panel.

【Examples of installation of measuring display unit】

Breaker mounting	Panel mounting
	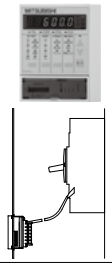

◆Model list

Model type	Type name	Remarks
CC-Link communication	MDU-AC ○○○	• The model names do not include ○○○.
Electric energy pulse output	MDU-AP ○○○	• When installing the Measuring Display Unit on the body, specify the A frame type in ○○○. For example, when the circuit breaker NF400-SEP with MDU and the Measuring Display Unit with CC-Link communication are combined, the model name is MDU-AC400. If 630A frame or 800A frame is used, specify 630 or 800 in ○○○.
No transmission	MDU-AN ○○○	• When installing the Measuring Display Unit on the panel, specify the cable length (0.5 m, 2 m, 3 m, 5 m or 10 m) in ○○○. For example, when the Measuring Display Unit with CC-Link communication is installed on the panel with a 3-m cable, the model name is MDU-AC-PANEL 3M.

●Specifications for Measuring Display Unit (1)

The measurement and display items vary depending on the model or frame A.
(For the measurement accuracy, please refer to page 39.)

Applicable models
NF250-SEV with MDU, NF250-HEV with MDU

Table 2-1

Measurement and memory items (accuracy) (*1) (*2) / Model			Display	Storage (*3)	With CC-Link communication: Communication	Remarks
Load current (±1.0%)	Present value	Each phase	●	–	●	
		General (average value) (*5)	●	–	●	
		Phase with max. value	–	–	●	
	Present value of demand (*4)	Each phase	●	–	●	
		Phase with max. value	●	–	●	
	Max. demand value among all phases		●	●	●	
	Time of occurrence of max. demand value among all phases		●	●	●	
Line voltage (±1.0%)	Present value	Between each lines	●	–	●	
		General (average value) (*5)	●	–	●	
	Max. value among all lines		●	●	●	
	Time of occurrence of max. value among all lines		●	●	●	
Harmonic current (±2.5%)	Present value	Fundamental wave of each phase	●	–	●	
		Each order of each phase	●	–	●	
		General of each phase (*6)	●	–	●	
	Max. value of fundamental wave among all phases		●	●	●	
	Time of occurrence of max. value of fundamental wave among all phases		●	●	–	
	Max. value in each order of each phase		●	●	●	
	Time of occurrence of max. value in each order of each phase		●	●	●	
	Demand value (*4)	General of each phase (*6)	●	–	●	
		General max. value among all phases	●	●	●	
		Time of occurrence of general max. value among all phases	●	●	●	
	General distortion factor of each phase		●	–	–	
	Content in each order of each phase		●	–	–	
Electric power (±1.5%)	Present value		●	–	●	
	Demand value (*4)	Present value	●	–	●	
		Max. value	●	●	●	
		Time of occurrence of max. value	●	●	●	
Reactive power (±2.5%)	Present value		●	–	●	
	Demand value (*4)	Present value	●	–	●	
		Max. value	●	●	●	
		Time of occurrence of max. value	●	●	●	
Electric energy (±2.0%) (*7)	Integrated value		●	●	●	Value accumulated from previous reset to present
	Amount for last 1 hour		●	–	●	
	Max. value of amount for 1 hour		●	●	●	
	Time of occurrence of max. value of amount for 1 hour		●	●	●	
Reactive energy (±3.0%) (*7)	Integrated value		●	●	●	Value accumulated from previous reset to present
	Amount for last 1 hour		●	–	●	
	Max. value of amount for 1 hour		●	●	●	
	Time of occurrence of max. value of amount for 1 hour		●	●	●	
Cause of fault (*8)	Fault current (accuracy: ±15%)		●	●	●	Information on fault after previous reset or last fault, and cause of fault (continuously monitored)
	Cause of fault		●	●	●	
Power factor (±5.0%)	Present value		●	–	●	
	Max. value		●	●	●	
	Time of occurrence of max. value		●	●	–	
Frequency (±2.5%)	Present value		●	–	●	
Alarm of circuit breaker (*9)	PAL, OVER, IDM_AL, ILA_AL, IUB_AL,		●	–	●	The PAL functions are enabled when the MDU breaker with PAL module (option) is used.
	Neutral line open phase alarm		●	–	–	The neutral line open phase alarm is given only on the display.
State of circuit breaker	Tripping state of circuit breaker (AL)		–	–	●	On installation of alarm switch for transmission with Measuring Display Unit (option)
	ON/OFF state of circuit breaker (AX)		–	–	●	On installation of auxiliary switch for transmission with Measuring Display Unit (option)
	Number of times of tripping of circuit breaker		–	●	●	On installation of alarm switch for transmission with Measuring Display Unit (option)
	Number of times of opening and closing of circuit breaker		–	●	●	On installation of auxiliary switch for transmission with Measuring Display Unit (option)
Default settings	Time setting		●	●	●	Initial setting and resetting after power failure are necessary (no power failure compensation)
	Demand time limit setting (*4)		●	●	●	By default, the demand time limit is 2 min. It can be set in the range from 0 to 15 min in 1-min steps.
	IDM_AL (current demand alarm)		●	●	●	By default, the function is off. The parameters can be set in the following ranges. Function: ON/OFF Pickup current: 50 to 100% (1% step) Demand time limit: 1 to 10 min (1-min step), 15, 20, 25 and 30 min
	ILA_AL (current open phase alarm)		●	●	●	By default, the function is off. The parameters can be set in the following ranges. Function: ON/OFF Pickup current: 10%, fixed (no setting) Operating time: 30 sec (no setting)
	IUB_AL (unbalanced current alarm)		●	●	●	By default, the function is off. The parameters can be set in the following ranges. Function: ON/OFF Pickup current: 30%, fixed (no setting) Operating time: 30 sec (no setting)
	Neutral line open phase alarm		●	●	●	30 When the single-phase 3-wire type is set, the function is turned on. Rated operating overvoltage: 135 V AC (no setting) Operating time: 1 sec (no setting)
	Phase switching setting		●	●	●	Default: No phase switching
	Alarm retention (self-retention or automatic reset) setting		●	●	●	Default: Automatic reset
	Phase and wire type		●	●	●	Default: 3-phase 3-wire
	Electric energy arbitrary setting		●	●	●	
	Reactive energy arbitrary setting		●	●	●	
	Display direction		●	●	●	Default: Vertical One of vertical, horizontal 1 and horizontal 2 can be selected.

Notes: *1 The term "each phase" used for load current and harmonic current refers to phase 1, 2, 3 or N. However, the phase N is provided only on 4-pole circuit breakers.
The term "between each phase" used for line voltage refers to between phases 1 and 2, 2 and 3, 3 and 1, 1 and N, 2 and N or 3 and N. However, voltage between phases 1 and N, 2 and N and 3 and N is applicable only on 4-pole circuit breakers.
These circuit breakers measure the values every 0.25 sec. Therefore, even when a low order circuit breaker operates, operating current may not be measured.
*2 Each maximum value is the largest value among values obtained from the start of operation (after the previous reset) to the present.
*3 The integrated value of electric energy and the integrated value of reactive energy are stored upon occurrence of power failure and every 30 minutes, the fault current and the cause are stored upon occurrence of fault, the set values are stored when they are set, and other values are stored every 30 minutes in the nonvolatile E²PROM.
*4 The demand time limit cannot be set individually. It is common to the items.
*5 The average values of load current and line voltage are calculated as shown below when the phase and wire type is specified.

Phase and wire type	Average present value of current	Average present value of voltage
Single-phase 2-wire	Average present value of current = phase 3 current	Average present value of voltage = voltage between phases 2 and
Single-phase 3-wire	Average present value of current = (phase 1 current + phase 3 current)/2	Average present value of voltage = (voltage between phases 1 and 2 + voltage between phases 2 and 3)/2
3-phase 3-wire 3-phase 4-wire	Average present value of current = (phase 1 current + phase 2 current + phase 3 current)/3	Average present value of voltage = (voltage between phases 1 and 2 + voltage between phases 2 and 3 + voltage between phases 3 and 1 phases)/3

*6 Sum of values of harmonic components in third to 19th orders except fundamental wave component
*7 The reverse power is not measured.
*8 If the upper limit of the fault current measurement range (rated current 125 to 250 A (adjustable): 4000 A, rated current 50, 60, 75, 100, 125 A (fixed): 2000 A)) is exceeded when overload or short circuit fault occurs, the cause of the fault may not be displayed, and the fault current may not be measured. For fault current, display of cause of fault and measurement of fault current are enabled when the AL for transmission with the Measuring Display Unit (option) is installed.
*9 When the alarm retention mode has been set to Automatic reset, the alarm display on the Measuring Display Unit will be reset automatically. When the alarm retention mode is Self-retention, the alarm display will be self-retained. In the self-retention mode, the display can be reset through the alarm reset operation (collective reset). OVER will be automatically reset regardless of the mode setting.

●Specifications for Measuring Display Unit (1)

The measurement and display items vary depending on the model or frame A.
(For the measurement accuracy, please refer to page 40.)

Applicable models
NF400-SEP with MDU, NF400-HEP with MDU, NF630-SEP with MDU, NF630-HEP with MDU, NF800-SEP with MDU, NF800-HEP with MDU

Table 2-2

Measurement and memory items (accuracy) (*3)	Model	MDU Display	Storage (*1)	Electric energy with pulse output: Pulse output (*1)	With CC-Link communication: Communication	Remarks
Load current (±2.5%)	Present value of each phase	●	–	–	●	Time limit: 0 to 15 min, changeable (Same as the present value when 0 min is specified)
	Demand value of each phase	●	–	–	●	
	Average present value (*11)	●	–	–	●	
	Max. demand value (general value) (*4)	●	●	–	●	Max. demand value after previous reset
	Time of occurrence of max. value (year, month, day, hour, minute)	–	●	–	●	
Line voltage (±2.5%)	Present value between each phases	●	–	–	●	
	Average present value (*11)	●	–	–	●	
	Max. value (general value) (*4)	●	●	–	●	Max. value after previous reset (not demand value)
	Time of occurrence of max. value (year, month, day, hour, minute)	–	●	–	●	
Harmonic current (±2.5%)	Current value in 3rd, 5th, 7th ... 19th orders of each phase	●	–	–	●	
	Max. value in 3rd, 5th, 7th ... 19th orders (general value) (*4)	●	●	–	●	Max. value after previous reset (not demand value)
	Time of occurrence of max. value (year, month, day, hour, minute)	–	●	–	●	
	Current value of general harmonics of each phase (*10)	●	–	–	●	Time limit: 0 to 15 min, changeable (Same as the present value when 0 min is specified)
	Demand value of general harmonics of each phase (*10)	●	–	–	●	
	Max. demand value (general value) (*4)	●	●	–	●	Max. demand value after previous reset
	Time of occurrence of max. value (year, month, day, hour, minute)	–	●	–	●	
Electric power (±2.5%)	Current value (also reverse power is measured)	●	–	–	●	Time limit: 0 to 15 min, changeable (Same as the present value when 0 min is specified)
	Demand value (also reverse power is measured)	●	–	–	●	
	Max. demand value	●	●	–	●	Max. demand value after previous reset
	Time of occurrence of max. value (year, month, day, hour, minute)	–	●	–	●	
Electric energy (±2.5%)	Electric energy (integrated value) (*5)	●	●	●	●	Value accumulated from previous reset to present
	Electric energy per time (*5)	●	–	–	●	Amount for 1 hour from hour to hour on built-in clock
	Max. value of electric energy per time (*5)	●	●	–	●	Max. demand value after previous reset
	Time of occurrence of max. value (year, month, day, hour, minute)	–	●	–	●	
Cause of fault	Fault current (accuracy: ±15%) (*11)	●	●	–	●	Information on fault after previous reset or last fault, and cause of fault (continuously monitored)
		●	●	–	●	
Power factor (±5%)	Present value	●	–	–	●	
Alarm of circuit breaker	PAL, OVER (*6) (*11)	● LED on	–	–	●	
State of circuit breaker	Tripping state of circuit breaker (AL)	–	–	–	●	When alarm switch for transmission with Measuring Display Unit (option) is installed
	ON/OFF state of circuit breaker (AX)	–	–	–	●	When auxiliary switch for transmission with Measuring Display Unit (option) is installed
Default settings	Time setting	–	–	–	●	Initial setting and resetting after power failure are necessary (no power failure compensation).
	Demand time limit setting (*7)	●	●	–	●	Default: 2 min Setting in 1-min steps in range from 0 to 15 min
	PAL pickup current setting * Setting on circuit breaker body The Measuring Display Unit does not have the setting function.	●	●	–	●	Default: 100% Setting in 5% steps in range from 70 to 100% Default setting on breaker body is 70% unless otherwise specified.
	Pulse unit setting	●	●	–	–	Default: 1 kWh/pulse Setting to 1 kWh, 10 kWh, 100 kWh, 1000 kWh or 10000 kWh
	Phase switching setting	●	●	–	●	Default: No phase switching
	Alarm retention (self-retention or automatic reset) setting	●	●	–	●	Default: Automatic reset

Notes:
*1 The electric energy (integrated value) is stored upon occurrence of power failure and every 2 hours, the fault current and the cause are stored upon occurrence of fault, the demand time limit, EPAL sensitivity current, PAL pickup current, pulse unit, alarm retention and phase switching settings are stored when they are set, and other values are stored every 2 hours in the nonvolatile E^2PROM.
Each maximum value is the largest value among values obtained from the start of operation (after the previous reset) to the present.
*2 Every time the electric energy is integrated in the pulse unit (the unit can be set to 1 kWh, 10 kWh, 100 kWh, 1000 kWh or 10000 kWh), a pulse is output. Counting can be performed with a PLC.
*3 The term "each phase" used for load current and harmonic current refers to phase 1, 2, 3 or N. However, the phase N is provided only on 4-pole circuit breakers.
The term "between each phase" used for line voltage refers to between phases 1 and 2, 2 and 3, 3 and 1, 1 and N, 2 and N or 3 and N. However, voltage between phases 1 and N, 2 and N and 3 and N is applicable only on 4-pole circuit breakers.
The electric energy data is 6-digit data of up to 999999 kWh. The voltage and harmonic current are 3-digit data, and others are 4-digit.
These circuit breakers measure the values every 0.25 sec. Therefore, even when a low order circuit breaker operates, operating current may not be measured.
*4 Each general value indicates the value only of the phase with the maximum value.
*5 The electric energy is not measured in the case of reverse power flow.
*6 When the alarm retention mode has been set to Automatic reset, the PAL alarm LED display on the Measuring Display Unit front panel will be reset automatically. When the alarm retention mode is Self-retention, the alarm display will be self-retained. In the self-retention mode, the display can be reset through alarm reset operation (collective reset). OVER will be automatically reset regardless of the mode setting.
*7 The demand time limit cannot be set individually. It is common to the items.
*8 Sum of values of harmonic components in third to 19th orders except fundamental wave component.
*9 The average present value of load current is the average value of current among phases 1, 2 and 3 (the current of the phase N is not included even in the case of a 4-pole circuit breaker). When the circuit breaker is used on a single-phase 3-wire circuit, the calculated value is displayed. However, ignore it. The average present value of line voltage is the average value of voltages between phases 1 and 2, 2 and 3 and 3 and 1 (the voltages between phases 1 and N, 2 and N and 3 and N are not included in the case of a 4-pole circuit breaker).
*10 Setting at the pre-alarm current Ip (which can be set in the range from 70 to 100% of the rated current In in 5% steps) on the circuit breaker body. The Measuring Display Unit does not have the setting function.
*11 The operating time of PAL is shown below.

PAL	Same as pre-alarm operating time Tp on circuit breaker body

●Specifications for Measuring Display Unit (2)

Applicable models
NF250-SEV with MDU, NF250-HEV with MDU

Table 2-3

Item		Specification
Data updating cycle		250 ms (harmonic current: 2 s)
Tolerances		Current and voltage: ±1.0% (to rating input) Electric power: ±1.5% (to rating input) Reactive power: ±2.5% (to rating input) Harmonic current: ±2.5% (to rating input) Power factor: ±5% Frequency: ±2.5% Electric energy: ±2.0% (voltage 100 V to 440 V, range from 5 to 100% of current rating, power factor 1) Reactive energy: ±3.0% (voltage 100 V to 440 V, range from 10 to 100% of current rating, power factor 0) Fault current: ±15% (*1)
Demand time limit setting range		0 to 15 min (1-min steps)
Rated input	Voltage circuit (1ϕ2W, 3ϕ3W)	440 V (only 4-pole breakers applicable to 3ϕ4W)
	Voltage circuit (1ϕ3W)	
	Voltage circuit (3ϕ4W)	
	Current circuit	Load current/harmonic current: 250 A
	Frequency	50 Hz/60 Hz (automatic discrimination of frequency)
Power failure compensation	(1) Wh (integrated value) (2) Max. value (3) Setting data	Stored in EEPROM (nonvolatile memory) * Wh and varh are stored upon occurrence of power failure and every 30 min. Max. value is stored every 30 min. Setting data are stored when they are set.
	Clock	No power failure compensation
Clock accuracy		Approx. 1 min/month
External dimensions (unit: mm)		See Characteristics and Dimensions.
Control power supply		Compatible with 100 to 240 V AC/DC, 50/60 Hz (allowable voltage range: 85% to 110%), 12 VA (*2)
Other functions		Function for switching phases to be measured to 1-3 and 3-1 PAL alarm, self-retention/automatic reset setting function (*3) Function for counting number of times of opening and closing of circuit breaker body (*4)

Notes: *1 The measurement of fault current of load is enabled when the AL switch for transmission with Measuring Display Unit (option) is installed in the Measuring Display Unit Breaker body.
*2 When the MDU unit control power is turned on, a rush current transitionally flows (maximum rush current: 2A, energizing time: 1ms (240V AC)
*3 The PAL functions are enabled when the MDU breaker with PAL module (option) is used.
*4 The function is enabled when the AX switch for transmission with Measuring Display Unit (option) is installed in the Measuring Display Unit Breaker body.

●Network Specifications for Measuring Display Unit

[Electric energy pulse output]

Table 2-4

Item	Specification
Output elements	Solid state relay (SSR), no voltage a contact (Ca and Cb terminals: no polarity)
Contact capacity	Compatible with 24V DC and 100 to 200 V AC, 20 mA
Output pulse unit	1, 10, 100, 1000 and 10000 kWh/pulse (settable)
Output pulse width	0.35 to 0.45 s
Max. wiring length	100m

[CC-Link communication]

Table 2-5

Item	Specification
Communication speed	10M/5M/2.5M/625k/156kbps
Communication method	Broadcast polling method
Synchronization method	Frame synchronization method
Encoding method	NRZI
Transmission format	Conforming to HDLC
Number of occupied stations	Remote device occupying 1 station
Number of connected units	Meet the following conditions. When a system consists only of Measuring Display Units, up to 42 units can be connected. Condition 1 for number of connected units $\{(1\times a) + (2\times b) + (3\times c) + (4\times d)\} \leqq 64$ a: Number of units occupying 1 station b: Number of units occupying 2 stations c: Number of units occupying 3 stations d: Number of units occupying 4 stations Condition 2 for number of connected units $\{(16\times A) + (54\times B) + (88\times C)\} \leqq 2304$ A: Number of units at 1 remote I/O station ≦ 64 B: Number of units at remote device station ≦ 42 C: Number of units at local station ≦ 26
Station number	Setting in range from 1 to 64 (Set the station number without fail.)
CC-Link version	CC-Link Ver.1.10
Max. total extension cable length and cable length between stations	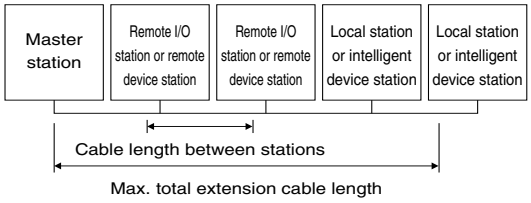 Cables applicable to CC-Link Ver. 1.10 (with use of 110-ohm terminal resistance)
Connecting cable	Cables applicable to CC-Link Ver. 1.10 (shielded 3-core twisted pair cables) * Cables applicable to Ver. 1.10 supplied by different manufacturers can be used simultaneously.

Communication speed	156kbps	625kbps	2.5Mbps	5Mbps	10Mbps
Cable length between stations	0.2 m or more				
Max. total extension cable length	1200m	900m	400m	160m	100m

Note: For more information, visit the website of CC-Link Partner Association (HYPERLINK "http://www.cc-Link.org/").

●Specifications for Measuring Display Unit (2)

Applicable models
NF400-SEP with MDU, NF400-HEP with MDU, NF630-SEP with MDU, NF630-HEP with MDU, NF800-SEP with MDU, NF800-HEP with MDU

Table 2-6

Item		Specification
Data updating cycle		250 ms (harmonic current: 2 s)
Tolerances		Current, voltage and Electric power: ±2.5% (to rating input) Power factor: ±5% Electric energy: ±2.5% (voltage 100 V to 440 V, range from 5 to 100% of current rating, power factor 1) Fault current: ±15%
Demand time limit setting range		0 to 15 min (1-min steps)
Rated input	Voltage circuit (1ϕ2W, 3ϕ3W)	440 V (only 4-pole breakers applicable to 3ϕ4W)
	Voltage circuit (1ϕ3W)	
	Voltage circuit (3ϕ4W)	
	Current circuit	Load current/harmonic current: 100 A/225 A/400 A/600 A/800 A (Automatic discrimination. Determined based on A frame of circuit breaker. 100 A when rated current of 225 A frame is 100 A or less) Leakage current: 500 mA
	Frequency	50 Hz/60 Hz (automatic discrimination of frequency)
Power failure compensation	(1) Wh (integrated value) (2) Max. value (3) Setting data	Stored in EEPROM (nonvolatile memory) * Wh is stored upon occurrence of power failure and every 2 hours The max. value is stored every 2 hours. The setting data is stored when it is set.
	Clock	No power failure compensation
Clock accuracy		Approx. 1 min/month
External dimensions (unit: mm)		W×D×H: 90×75×30
Control power supply		Compatible with 100 to 240 V AC/DC, 50/60 Hz (allowable voltage range: 85% to 110%), 12 VA (*1)
Other functions		Function for switching phases to be measured to 1-3 and 3-1 ECA/PAL alarm, self-retention/automatic reset setting function

Note: *1 When the MDU unit control power is turned on, a rush current transitionally flows (maximum rush current: 2A, energizing time: 1ms (240V AC)

●Network Specifications for Measuring Display Unit

[Electric energy pulse output]

Table 2-7

Item	Specification
Output elements	Solid state relay (SSR), no voltage a contact (Ca and Cb terminals: no polarity)
Contact capacity	Compatible with 24V DC and 100 to 200 V AC, 20 mA
Output pulse unit	1, 10, 100, 1000 and 10000 kWh/pulse (settable)
Output pulse width	0.35 to 0.45 s
Max. wiring length	100m

[CC-Link communication]

Table 2-8

Item	Specification
Communication speed	10M/5M/2.5M/625k/156kbps
Communication method	Broadcast polling method
Synchronization method	Frame synchronization method
Encoding method	NRZI
Transmission format	Conforming to HDLC
Number of occupied stations	Remote device occupying 1 station
Number of connected units	Meet the following conditions. When a system consists only of Measuring Display Units, up to 42 units can be connected. Condition 1 for number of connected units { (1×a) + (2×b) + (3×c) + (4×d) } ≦ 64 a: Number of units occupying 1 station b: Number of units occupying 2 stations c: Number of units occupying 3 stations d: Number of units occupying 4 stations Condition 2 for number of connected units { (16×A) + (54×B) + (88×C) } ≦ 2304 A: Number of units at 1 remote I/O station ≦ 64 B: Number of units at remote device station ≦ 42 C: Number of units at local station ≦ 26
Station number	Setting in range from 1 to 64 (Set the station number without fail.)
CC-Link version	CC-Link Ver. 1.10
Max. total extension cable length and cable length between stations	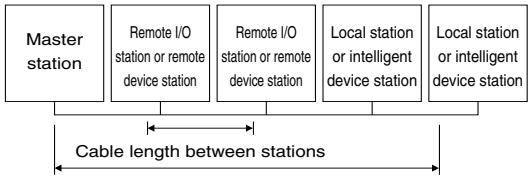 Cables applicable to CC-Link Ver. 1.10 (with use of 110-ohm terminal resistance) Communication speed: 156kbps / 625kbps / 2.5Mbps / 5Mbps / 10Mbps Cable length between stations: 0.2 m or more Max. total extension cable length: 1200m / 900m / 400m / 160m / 100m When the Measuring Display Unit is installed on the panel, the terminal block on the panel mounting plate and the terminal block on the Measuring Display Unit are connected with a CC-Link cable having a one-way length of 15 cm and an entire length of 30 cm. When connecting the unit in consideration of the following three points. (1) The one-way length of the CC-Link cable, 15 cm, is included in the distance between stations. (2) The entire length of the CC-Link cable, 30 cm, is included in the maximum transmission distance (total extension distance).
Connecting cable	Cables applicable to CC-Link Ver. 1.10 (shielded 3-core twisted pair cables) * Cables applicable to Ver. 1.10 supplied by different manufacturers can be used simultaneously.

Note: For more information, visit the website of CC-Link Partner Association (HYPERLINK "http://www.cc-Link.org/").

●Cautions when Using Measuring Display Unit Breakers (common instructions)

Measuring accuracy

(1) The accuracy of measurement of current or voltage is indicated as the percentage of error to the rated current or voltage for measurement by the Measuring Display Unit.
The measurement rated current is the maximum rated current of each ampere frame. For W & WS Series Measuring Display Unit Breakers, the accuracy is the max. rated current × ±2.5%. For WS-V Series Measuring Display Unit Breakers, the accuracy is the max. rated current × ±1%.
(For example, when the rated current of NF630-SEP with Measuring Display Unit is 350 A, the measurement rated current is 630 A, and the current accuracy is 630 A × ±2.5% = ±15 A.)
* The measurement rated voltage is 440 V. (Common to all A frames)
When the current is less than 1.0% of the measurement rated current in the case of WS-V Series Measuring Display Unit Breakers or less than 2.0% of the measurement rated current in the case of W & WS Series Measuring Display Unit Breakers or when the voltage is less than 5.0% of the measurement rated voltage in the case of WS-V Series Measuring Display Unit Breakers or less than 2.0% of the measurement rated current in the case of W & WS Series Measuring Display Unit Breakers, the current or voltage is cut off, and zero is displayed.

(2) When the current is cut off, the current is displayed as 0 A. However, if the current is 0.4% or more of the measurement rated current, the electric energy is measured.

(3) The accuracy of power factor is the percentage to electrical angle of 90°. A power factor of 50% or less is displayed as a reference value.

(4) The accuracy of electric energy is ±2.0% of the true value in the case of WS-V Series Measuring Display Unit Breakers and ±2.5% of the true value in the case of W & WS Series Measuring Display Unit Breakers in the range of measurement rated voltage (100 V to 440 V) × current (measurement rated current of 5 to 100%).

How to use Measuring Display Unit Breaker on single-phase 2-wire circuity

(1) Connect the breaker as shown in the right figure.
The phase 1 on the load side is charged. Insulate it.
As measurement data, use the current of the phases 2 and 3 and the voltage between the phases 2 and 3.
Although the current of the phase 1 and the voltage between the phases 1 and 2 and the phases 3 and 1 are measured, ignore the measurements. The Measuring Display Unit is designed for 3-phase 3-wire and single-phase and 3-wire circuits.
On W & WS Series Measuring Display Unit Breakers, the average values of load current and line voltage are calculated from the values of the phases 1, 2 and 3 (between the phases). Ignore these measurement values.
Also when the breaker is used on a single-phase 3-wire circuit, ignore these values.
When using any WS-V Series Measuring Display Unit Breaker, set the phase and wire type.

Connection on single-phase 2-wire circuit

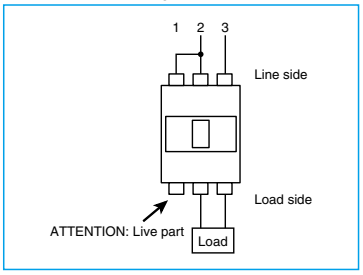

Phase sequence of Measuring Display Unit Breaker

The phase sequence of Measuring Display Unit Breaker can be set by using the phase switching function as shown below.
When the breaker is installed vertically with the power supply side upward (see the right figure), the phase sequence is set as stated below.
No phase switching: 1, 2, 3 and N from the left (default)
With phase switching: 3, 2, 1, and N from the left
Set the phase sequence in accordance with the installation and wiring methods.
Notes (1) The phase N is provided only on 4-pole circuit breakers.
(2) Note that the position of the phase N is unchanged regardless of the phase switching setting.

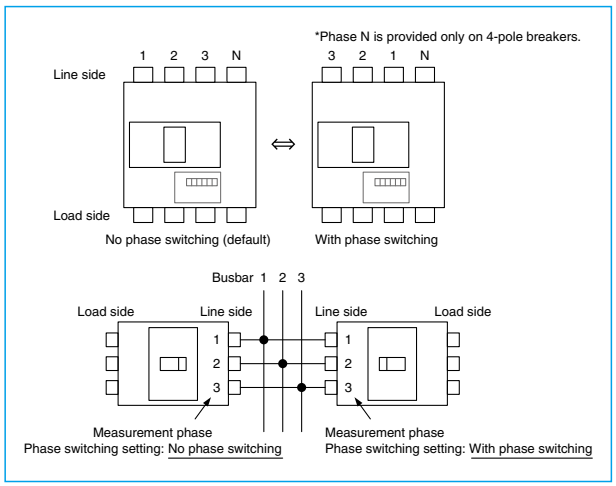

Reverse connection of Measuring Display Unit Breaker

The Measuring Display Unit Breakers cannot be connected with the power supply and load sides set reversely.

Installation of Measuring Display Unit Breaker in close contact

The Measuring Display Unit Breakers must not be installed in close contact.

(1) In the case of 400, 630 or 800A frame, install the breaker body securing a wiring space of 30 mm or more on the right side of the breaker to connect the connecting cables and fitting the connecting cable connectors.

(2) In the case of WS-V Series Measuring display Unit Breaker, install the breaker body securing a wiring space of 40 mm or more on the right side of the breaker to connect the connecting cables.

●Cautions when using Measuring Display Unit Breaker (For Measuring Display Unit)

Transmission method

(1) One of No transmission, With pulse output and With CC-Link communication should be specified.
(2) W & WS Series Measuring Display Unit Breaker with CC-Link communication cannot be manufactured for installing the Measuring Display Unit on the breaker body.
(3) When With transmission is selected, data which can be transmitted depends on the function of the Measuring Display Unit Breaker body. The transmission options cannot be installed or changed later. Specify the options when issuing the initial order.
(4) For the maximum number of connected units and transmission distance for each transmission type, see the following tables.
<WS-V Measuring Display Unit Breakers>
Tables 2-4 and 2-5
<W & WS Measuring Display Unit Breakers>
Tables 2-7 and 2-8

Installation of Measuring Display Unit

(1) When the installation of Measuring Display Unit on panel has been specified, the breaker will come with the panel mounting parts, mounting screws and 2-m connecting cable (standard).
(The 0.5-, 3-, 5- or 10-m connecting cable can be specified.)
(2) If the installation position of the Measuring Display Unit is changed from the panel to the body or vice versa, the Measuring Display Unit and the breaker body must be returned to the manufacturer for modification.

Measuring Display Unit Breaker with CC-Link communication (W & WS Series Measuring Display Unit Breakers)

(1) If you intend to use the circuit breaker with its pane out on the face board, specify the installation on panel.

●Change of display direction for breaker mounting

<WS-V Series Measuring Display Unit Breaker>
(1) When installing the Measuring Display Unit on the breaker body installed in the horizontal direction, the direction of the display can be changed according to the installation direction.
(2) The display direction is set on the display unit.

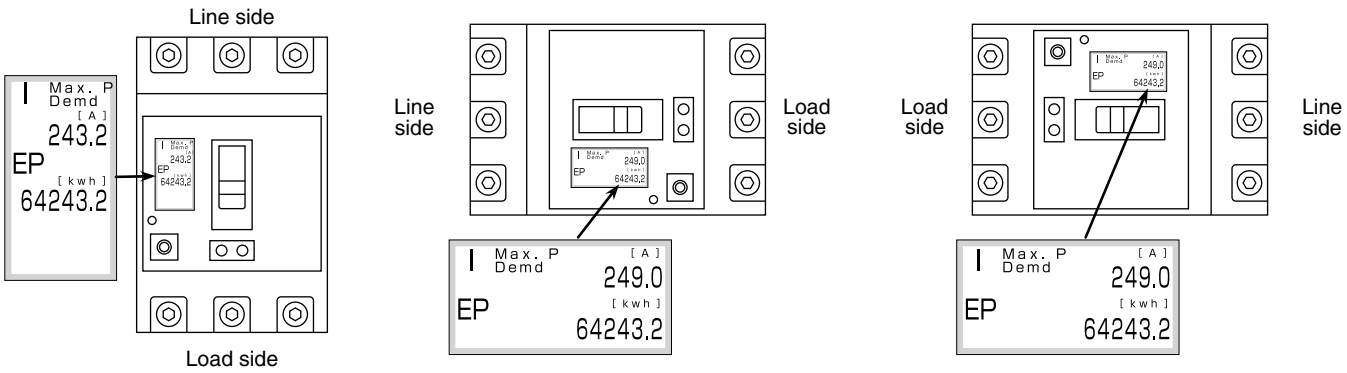

Default display direction
Installation with line side on left
Installation with line side on right

<W & WS Series Measuring Display Unit Breaker>
(1) When installing the Measuring Display Unit on the breaker body installed in the horizontal direction, the direction of the display of Measuring Display Unit can be changed for ease in reading according to the installation direction.
(2) Remove the screws on the rear panel of the Measuring Display Unit, and change the direction according to the installation direction.

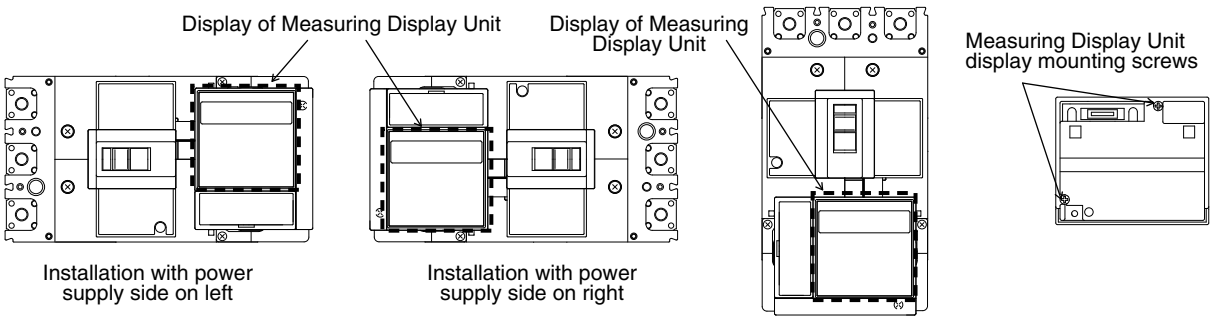

Installation with power supply side on left
Installation with power supply side on right
Default direction of Measuring Display Unit display

MEMO

Model			BH			BH-P		
Frame (A)			**70**	**100**	**100**	**70**	**100**	**100**
Image								
Number of poles			1	2	3	1	2	3
Rated current (A) at ambient temperature 40°C			70	70, 100	70, 100	70	70, 100	70, 100
Rated voltage (V)		AC	230/400			230/400		
		DC	125			125		
Rated short cirsuit capacity (kA)	IEC 60898-1	AC230/400V	3	–		3	–	
		AC400V	–	3		–	3	
	–	DC125V	1			1		
Instantaneous tripping			Type C (5 In <, ≦10 In)					
Dimensions (mm) 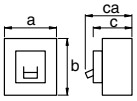		a	25	50	75	25	50	75
		b	95			74		
		c	57.5			60.5		
		ca	77.5			79		
Mass (kg)			0.16	0.32	0.48	0.13	0.26	0.38
Connection (*1)			Clamp terminal			Plug-in (line) Clamp (load)		
Automatic tripping device			Thermal, magnetic					
Optional accessories	Terminal cover		●			–		
	Mounting plate		●			–		
	Terminal base		–			●		
	Lock cover		●			●		
Approved by			–	LR, GL, NK	–	–	LR, BV, AB, GL, NK	–

Notes: *1 If reguired solderless terminal can be supplied.
(BH : Line and Load side, BH-P : Load side only)

				MCB											
Model				BHW-T10 (0.5 to 63A)											
Image															
No. of poles [P]				1	1+N[*1]	2	3	3+N[*1]	4	1	1+N[*1]	2	3	3+N[*1]	4
Instantaneous tripping[*2]				Type B						Type C, D					
Rated insulation voltage U_i [V]				660						660					
Rated current I_n [A] at ambient temperature 30°C				6, 10, 16, 20, 25, 32, 40, 50, 63						0.5, 1, 2, 3, 4, 5, 6, 10, 16, 20, 25, 32, 40, 50, 63					
Rated short-circuit capacity [kA]	IEC/EN 60898-1 (Icn)	AC	240V	10						10					
			240/415V	10	–	10				10	–	10			
			415V	–		10				–		10			
Energy limiting class[*3]				Class 3											
Number of operating cycles	Without current			4,000											
	With current			4,000											
Dimensions [mm] 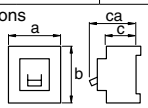			a	18	36		54	72		18	36		54	72	
			b	92.6											
			c	44											
			ca	Max. 73.5											
Type of overcurrent release				Thermal-magnetic											
Mounting				IEC 35mm rail											
Applicable wire size [mm^2]				1 to 25											
Mass [kg]				0.13	0.25	0.26	0.39	0.51	0.52	0.13	0.25	0.26	0.39	0.51	0.52
Accessories (optional)[*4]	Auxiliary switch (AX)			○											
	Shunt trip (SHT)			○											
Terminal connection				Solderless terminal											
Based on standard				IEC/EN 60898-1											
CE marking				○											

Notes: *1 N pole is a switched neutral pole (without overcurrent release device).
*2 Type B (3 I_n <, ≦ 5 I_n), Type C (5 I_n <, ≦ 10 I_n), Type D (10 I_n <, ≦ 20 I_n)
*3 Except for Type D
*4 Factory fitted
*5 In case of installing breakers side by side, reduce the passing current to under 80% of the rated current.

				MCB			
Model				BHW-T10 (80 to 125A)			
Image							
No. of poles [P]				1	2	3	4
Instantaneous tripping[*1]				Type B, C			
Rated insulation voltage U_i [V]				690			
Rated current I_n [A]	Amb. temp.	IEC/EN 60898-1	30°C	80, 100, 125			
		IEC/EN 60947-2	40°C				
Rated short-circuit capacity [kA]	IEC/EN 60898-1 (Icn)	AC	240/415V	10			
	IEC/EN 60947-2 (Icu/Ics)	AC	240/415V	10/7.5			
Rated impulse withstand voltage U_{imp} [kV]				6			
Suitability for isolation				Compatible			
Utilization category				A			
Pollution degree				3			
Number of operating cycles	Without current			10,000			
	With current			4,000			
Dimensions [mm] 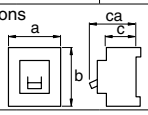			a	27	54	81	108
			b	94			
			c	44			
			ca	74.5			
Type of overcurrent release				Thermal-magnetic			
Mounting				IEC 35mm rail			
Applicable wire size [mm^2]				10 to 50			
Mass [kg]				0.21	0.42	0.63	0.84
Accessories (optional)[*2]	Alarm switch (AL)			○[*4]			
	Auxiliary switch (AX)			○			
	Shunt trip (SHT)			○[*4]			
Terminal connection				Solderless terminal			
Based on standard				IEC/EN 60898-1[*5], IEC/EN 60947-2			
CE marking				○			

Notes: *1 Type B (3 I_n <, ≦ 5 I_n), Type C (5 I_n <, ≦ 10 I_n)
*2 Field fitted
*3 In case of installing breakers side by side, reduce the passing current to under 80% of the rated current.
*4 This accessory will be released shortly. Please contact our branch office for release period and more details.
*5 This standard will be conformed shortly. Please contact our branch office for release period and more details.

		RCCBs	
Model		BVW-T	
Image			
No. of poles [P]		2 (1+N)*1	4(3+N)*1
Rated voltage [VAC]		240	415
Rated current I_n [A] at ambient temperature 30°C		16, 25, 32, 40, 63, 80, 100	
Rated current sensitivity $I_{\Delta n}$ [mA]		30, 100, 300	
Max. operating time at 5 $I_{\Delta n}$ [s]		0.04	
Pulsating current sensitivity		Type AC	
Residual operation		Independent of line voltage	
Rated making and breaking capacity I_m [A]		500(I_n 16, 25, 32, 40A), 630(I_n 63A), 800(I_n 80A), 1000(I_n 100A)	
Rated conditional short-circuit current I_{nc} [kA]		10	
Rated residual making and breaking capacity $I_{\Delta m}$ [A]		500(I_n 16, 25, 32, 40A), 630(I_n 63A), 800(I_n 80A), 1000(I_n 100A)	
Rated conditional residual short-circuit current $I_{\Delta C}$ [kA]		10	
Number of operating cycles	Without current	4,000*2	
	With current	2,000	
Dimensions [mm] 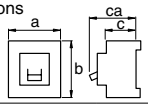	a	36	72
	b	90	
	c	44	
	ca	74	
Mounting		IEC 35mm rail	
Applicable wire size [mm^2]		1 to 35	
Mass [kg]		0.22	0.44
Accessories		Not available	
Terminal connection		Solderless terminal	
Based on standard		IEC/EN 61008-1	
CE marking		○	

Notes: *1 N pole is a switched neutral pole (without overcurrent release device).
*2 In case of ampere rating 32, 40, 63, 80 and 100A, the number of operating cycles is 3,000.

		Isolators						
Model		KBW-T						
Image								
No. of poles [P]		1	2	3	4	2	3	4
Utilization category		AC-22A				AC-22A		
Rated current I_n [A] at ambient temperature 30°C		25, 40, 63				80, 100, 125		
Rated voltage [VAC]		240	240/415			240/415		
Short time withstand current I_{cw} [A]		12×In, 1s				12×In, 1s		
Short-circuit making capacity I_{cm} [A]		12×In				12×In		
Rated impulse withstand voltage U_{imp} [kV]		6				6		
Pollution degree		2				2		
Dimensions [mm] 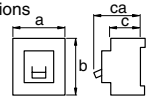	a	18	36	54	72	36	54	72
	b	92.6				92.6		
	c	44				44		
	ca	Max. 73.5				Max. 73.5		
Number of operating cycles	Without current	10,000				10,000 8,000(125A)		
	With current	1,500				1,500 1,000(125A)		
Mounting		IEC 35mm rail				IEC 35mm rail		
Applicable wire size [mm^2]		1 to 25				10 to 50		
Mass [kg]		0.12	0.22	0.33	0.47	0.20	0.30	0.40
Accessories		Not available				Not available		
Terminal connection		Solderless terminal				Solderless terminal		
Based on standard		IEC/EN 60947-3				IEC/EN 60947-3		
CE marking		○				○		

Accessories for Miniature Circuit Breakers (0.5–63A)

■Functions of Accessories

Accessory	Function
AX Auxiliary switch	Electrically indicates the On/Off status of the circuit breaker.
SHT Shunt trip	Electrically trips the circuit breaker from a remote location. Permissible working voltage is 100% of the rated voltage.

■Specifications

Model		AX
Contact	Configuration	1A1B
	Contact capacity	220VAC 6A
Connection		Lead wire

■Specifications

Model	SHT			
Cut-off switch	Equipped			
Voltage	12VDC	24VDC	48VDC	220VAC
Input power requirement [VA]	40	110	300	250
Operating time [ms]	<20			
Connection	Solderless terminal			

* Secure a sufficient input power supply so that the voltage will not drop below the permissible working voltage (100% of the rated voltage).
* The operating time denotes the time from when the rated voltage is applied to SHT until the time the main contact of the breaker starts to open.

■Combinations of Accessories

Accessory connection combinations	AX	
	SHT	

Breaker AX SHT

■Outer Dimensions

BHW-T10 (0.5 to 63A) with AX

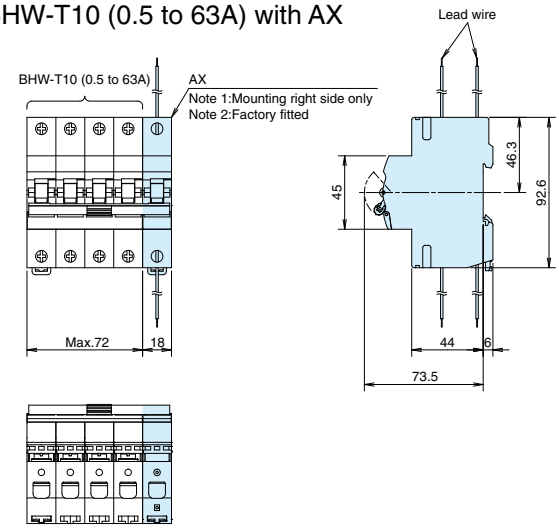

BHW-T10 (0.5 to 63A) with SHT

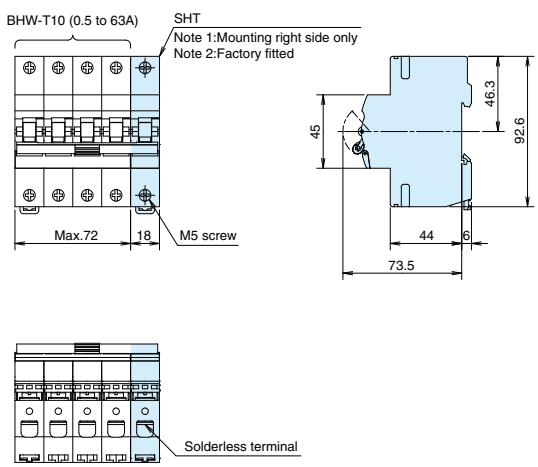

Accessories for Miniature Circuit Breakers (80–125A)

Functions of Accessories

Accessory	Function
AL Alarm switch*1	Electrically indicates the trip status of the circuit breaker.
AX Auxiliary switch	Electrically indicates the On/Off status of the circuit breaker.
SHT Shunt trip*1	Electrically trips the circuit breaker from a remote location. Permissible working voltage is 70% of the rated voltage.

Specifications

Accessory		AL*1	AX
Model		AL-1BHW	AX-1BHW
Contact	Configuration	1C	1C
	Contact capacity	230VAC 5A	230VAC 5A
Connection		Solderless terminal	Solderless terminal

Accessory	SHT*1*2	
Model	SHTD024-1BHW	SHTA240-1BHW
Voltage	24VDC	240VAC
Operating time [ms]	<20	
Connection	Solderless terminal	

*1 This accessory will be released shortly. Please contact our branch office for release period and more details.
*2 Secure a sufficient input power supply so that the voltage will not drop below the permissible working voltage (70% of the rated voltage).
The operating time denotes the time from when the rated voltage is applied to SHT until the time the main contact of the breaker starts to open.

Combinations of Accessories

Accessory connection combinations	AL	□ ●
	AX	□ ○
	SHT	▨ □
	AL+SHT	▨ □ ●
	AX+SHT	▨ □ ○

□ Breaker ● AL ○ AX ▨ SHT

Installation of Accessories

AL, AX

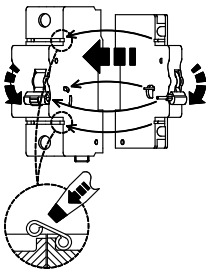

SHT

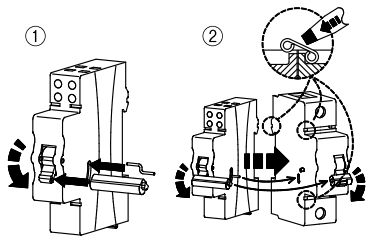

Outer Dimensions

AL, AX

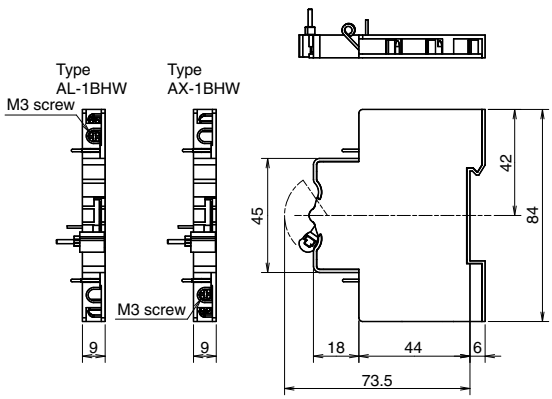

SHT

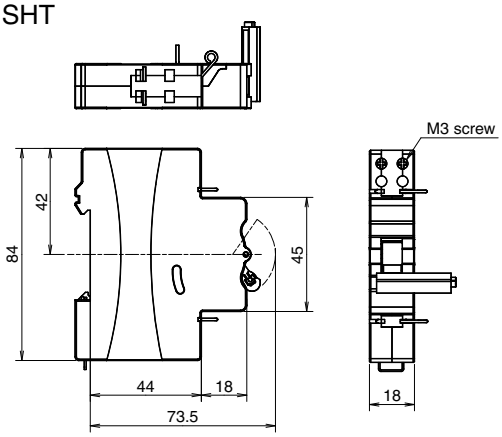

Frame (A)				30					
Model				CP30-BA			CP-S		
Image									
Number of poles				1	2	3	1	2	3
Rated insulation voltage Ui (V)				250			250		
Rated impulse withstand voltage Uimp (kV)				2.5			2.5		
Rated current (A)				0.1 0.25 0.3 0.5 1 2 3 5 7 10 15 20 30			0.05 0.1 0.25 0.3 0.5 0.75 1 2 2.5 3 5 7 7.5 10 15 20 25 30		
Rated short-circuit capacity (kA)	UL 1077 CSA C22.2 No.235 (*11)	Rated voltage (V)	AC (V)	250			250	–	
			DC (V)	65	125	–	65	–	
		AC		2.5kA at 250V			1.5kA at 250V	–	
		DC		2.5kA at 65V	2.5kA at 125V	–	1kA at 65V	–	
	IEC 60934 EN 60934 (Icn)	Rated insulation voltage Ui (V)		250			250		
		AC		250			1.5kA at 230V 2.5kA at 120V		
		DC		2.5kA at 60V	2.5kA at 120V	–	1kA at 60V	1kA at 120V (1kA at 60V) (*7)	1kA at 60V
	EN 60947-2 IEC 60947-2 (Icu/Ics)	Rated insulation voltage Ui (V)		250			–		
		AC		2.5/2.5kA at 230V			–		
		DC		2.5/2.5kA at 60V	2.5/2.5kA at 120V	–	–		
AC-DC common use				●		– (*1)	– (*8)		
Reverse connection				●			–		
Rated short time current (for switch only type)				–			AC250V 50/60Hz 1500A 0.02s AC125V 50/60Hz 2500A 0.02s DC65V 1000A 0.02s DC125V 1000A 0.02s		
Rated ambient temperature (°C)				40 (T40)			25 (T25)		
Operating characteristics				Instantaneous type (I); Medium type (M), (MD); Slow type (S), (SD); Fast type (F) (*2)			Instantaneous type (I); Medium type (M), (MD); Slow type (S), (SD); Fast type (F) (FD)		
Mode of tripping				Instantaneous type (I): magnetic only [MO]			Instantaneous type (I): magnetic only [MO]		
				Medium type (M), (MD) Slow type (S), (SD) : hydraulic-magnetic [HM] Fast type (F)			Medium type (M), (MD) Slow type (S), (SD) : hydraulic-magnetic [HM] Fast type (F), (FD)		
Method of operation				S-type (IEC 60934)					
Trip-free behaviour				Trip-free (IEC 60934)					
Mass (kg)				0.08	0.16	0.23	0.06	0.12	0.18
Accessories	Retractable small terminal cover (TC-S)			●Standard IP20 (front, terminal covers closed) [Certified of TUV]			–		
	Inertial delay (ID)			● (Medium, Slow type: AC only)			● (Medium, Slow, Fast type: AC only)		
	Alarm switch (AL)			● (1c)			● (1c) (*7)		
	Auxiliary switch (AX)			● (1c)			● (1c)		
	Shunt trip (SHT)			● (for relay type) (*3)			● (for parallel and relay type: AC only)		
	Large terminal cover (TC-L)			● (*6)			–		
	Flushpanel mounting brackets (FP)			●			–		
	Back facing wiring termnal (BT)			● (*4), (*6)			–		
	Lock cover (LC)			–			●		–
	Accessory terminal cover (TC)			● (*6)			–		
Connection	Main body			20A or less : Screw terminal M4 30A : Screw termnal M5			Male tub terminal 6.3mm (#250) [Screw terminal M4 (series type only)]		
	Alarm switch / Auxiliary switch			Screw terminal M3.5			Male tub terminal 2.8mm (#110)		
Main body mounting method				Srface, IEC rail mounting Flush panel mounting (option)			Panel mounting		
International standard				UL(cURus), CCC (*5)			UL(UR) (*9), (*10)	–	
CE Marking				EN 60934 : TUV approval EN 60947-2 : Self-declaration (*5)			EN 60934 : TUV approval (*10) (Operating characteris is Medium type (M) only. The rated current, 0.3A, 2A, 3A and 7A are not applied.)		

Notes:
*1 The 3-pole products are for AC use only.
*2 Contact us for operating characteristics other than those mentioned above.
*3 In poles equipped with a shunt tripping mechanism, the overcurrent tripping element is not operative (switched shunt tripping).
*4 For back-face wiring terminals, specify if it will be used with 30A, or 20A or less.
*5 UL(cURus), CCC, and CE Marking are displayed on standard products.
*6 It is recognition of UL(cURus), CCC, and TUV.
*7 In case of DC use, only DC65V is available.
*8 Specify if for DC use when ordering.
*9 Specify when ordering. (In case of CP-S UL, type name is CP-SU.)
*10 Connection is male tub terminal only.
*11 CP30-BA only.

Remarks:
1. Products for non-standard conditions are special order. (Low temperature, 1st and 2nd-degree moisture fungal treatment, corrosion-resistant)
2. Although a buzzing sound may occur when an instantaneous type becomes 80% or more of the rated current for AC use, performance is not effected. Please take this point into consideration when selecting units for use in quiet environments.
3. Please use in environments free of high temperatures, humidity, dust, corrosive gas, vibration, and impact.
Also, do not use it in a circuit with inrush current or harmonics. Problems may result.

■Internal circuits and examples of application

Internal circuit	Available model	Operating characteristics: Instantaneous type I	High speed type F	High speed type FD	Medium speed type M	Medium speed type MD	Low speed type S	Low speed type SD	shunt trip
Serial type	CP30-BA	●	●	–	●	●	●	●	–
	CP-S	●	●	●	●	●	●	●	–
Serial type with auxiliary switch	CP30-BA	●	●	–	●	●	●	●	–
	CP-S	●	●	●	●	●	●	●	–
Serial type with alarm switch	CP30-BA	●	●	–	●	●	●	●	–
	CP-S	●	●	●	●	●	●	●	–
Relay type shunt trip (with SHT)	CP30-BA	–	–	–	–	–	–	–	●
	CP-S	–	–	–	–	–	–	–	●
Parallel type shunt trip (with SHT)	CP-S	–	–	–	–	–	–	–	●
Relay type current trip	CP-S	●	●	●	●	●	●	●	–
Parallel type current trip	CP-S	●	●	●	●	●	●	●	–
Switch type	CP-S	–	–	–	–	–	–	–	–

■Internal accessories

Auxiliary switch (AX)

Operates in conjunction with the main circuit operating mechanism to electrically retrieve the ON/OFF status of protector.

Alarm switch (AL)

Operates in conjunction with the main circuit operating mechanism to electrically retrieve the tripping status of protector.

Remarks (1) When the handle of CP30-BA is constrained in the ON status, it does not issue the alarm signal even if it is tripped.
(2) The alarm switch will be reset when the body is reset or turned on.

Shunt trip (SHT)

A parallel relay type protector, which can break the circuit instantaneously when receiving an external signal

Inertial delay device

The inertial delay device is designed to avoid unnecessary operation caused by inrush current of transformer or lamp load. The device can withstand unrepeated one pulse of crest value 20 times higher than the rated current (pulse time = 8 ms). It can be added to circuits having high, medium and low speed operating characteristics. (It cannot be added to instantaneous or DC types.)

●Ratings of alarm switches (AL) and auxiliary switches (AX)

(1) For CP30-BA

Classification			AC Voltage (V)	AC Current (A) Resistive load	AC Current (A) Inductive load	DC Voltage (V)	DC Current (A) Resistive load	DC Current (A) Inductive load
Ratings of items other than those shaded in Table 1	For general load	Max.	(250)	(1)	(0.5)	50	1	0.5
			125	3	1	30	2	1
		Min.	0.1A/15VAC			0.1A/15VDC		
	For minute load	Max.	125	0.5	–	30	0.5	–
		Min.	1mA/24VDC, 2mA/12VDC, 5mA/6VDC					
Ratings of items shaded in Table 1	For general load	Max.	(250)	(1)	(0.5)	(50)	(1)	(0.5)
			125	3	(1)	30	(2), 0.5	(1)
		Min.	0.1A/15VAC			0.1A/15VDC		
	For minute load	Max.	125	(0.5), 0.1	–	30	(0.5), 0.1	–
		Min.	1mA/24VDC, 2mA/12VDC, 5mA/6VDC					

Remarks: 1. The switches having the ratings in parentheses are manufactured at the customer's request. (Specify the voltage). Such switches do not conform to UL (cURus), CCC or CE Marking requirements.

(2) For CP-S

AC Voltage (V)	AC Current (A) Resistive load	AC Current (A) Inductive load	DC Voltage (V)	DC Current (A) Resistive load	DC Current (A) Inductive load
250	3	2	250	0.2	0.2
125	5	3	125	0.4	0.4
–	–	–	30	4	3
–	–	–	14	5	4

Remarks: 1. When using these switches to a circuit with a minute load (125 V AC, 0.1 A or 30 V DC, 0.1 A or less), designate the application as minute load.

●Ratings of shunt trip (SHT) coils

(1) For CP30-BA

Ratings

Rated operating voltage (V)		Time rating
100-200	Compatible with 100 to 200 V AC and 100 V DC	10 sec or less
24-48	Compatible with 24 to 48 V DC	

Coil resistance, resistance and impedance (at25°C)

Voltage (V)	Impedance for AC (Ω)	DC resistance for DC (Ω)
24-48	–	160
100-200	2400	2100

Remarks: 1. The allowable range is 70 to 110% of the rated voltage for AC and 75 to 120% of the rated voltage for DC.
2. The time rating is 10 seconds or less. Configure the circuit on which voltage will not be applied for more than 10 seconds.

(2) For CP-S

Ratings

Rated operating voltage (V)		Time rating
100	Compatible with 100 to 120 V AC (50/60Hz)	10 sec or less
200	Compatible with 200 to 240 V AC (50/60Hz)	
24, 48, 100	DC24, DC48, DC100	

Coil resistance, resistance and impedance (at25°C)

Voltage (V)	Impedance for AC (Ω)	DC resistance for DC (Ω)
24	–	110
48	–	110
100	1100	400
200	1100	–

Remarks: 1. The allowable range is 70 to 110% of the rated voltage for AC and 75 to 120% of the rated voltage for DC.
2. The time rating is 10 seconds or less. Configure the circuit on which voltage will not be applied for more than 10 seconds.

●Operation of auxiliary switch and alarm switch

Protector status		Switch status CP30-BA, CP-S
AX	Off or trip	AXa (open) / ALa (closed) AXb (open) / ALb (closed) AXc / ALc
AL	Off or ON	
AX	ON	AXa (closed) / ALa (open) AXb (closed) / ALb (open) AXc / ALc
AL	Trip	

Table 1 List of numbers of internal accessories which can be fitted

●AL ○AX ◐AL or AX ■SHT

Type name	AX 1P	AX 2P	AX 3P	AX More than one 1P	AX More than one 2P	AX More than one 3P	AX More than one 3P	AL 1P	AL 2P	AL 3P	AL+AX 1P	AL+AX 2P	AL+AX 3P	AL+AX 3P	SHT 1P	SHT 2P	SHT 3P	AL+SHT or AX+SHT 1P	AL+SHT or AX+SHT 2P	AL+SHT or AX+SHT 3P	AL+SHT or AX+SHT 3P	AL+AX+SHT 3P
CP30-BA	○		○			○	–	○	○		●		●		–	○	●		○	●	○	○	●	■	■		■			■	◐	■		◐	■	○	○	■	○	●
CP-S	○	○		○			–	○	○		○	○		○	○	○	○	●	●		●			●	○	●		○	●	○	○	●	■		■			■	–	◐	■	◐		■	–	●	○	■

Remark: 1. All accessories should be fitted on the internal accessory terminal block.

Installation and connection

Installation method	With screws	On IEC rails	With embedded fittings	On panel
Appearance		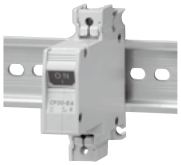	Circuit protectors with AL, AX and/or SHT cannot be installed by this method.	
CP30-BA	●	●	●	–
CP-S	–	–	–	●

Installation posture

The operating characteristics of electromagnetic (instantaneous) type circuit protectors are not affected by the installation posture. However, when installing a fluid electromagnetic (high, medium or low speed) type circuit protector, pay attention to the installation angle because the operating current value is changed under the influence of the gravity applied to the iron core in the oil dash pot.
Generally, it is recommended to use the circuit protectors in the vertical direction.

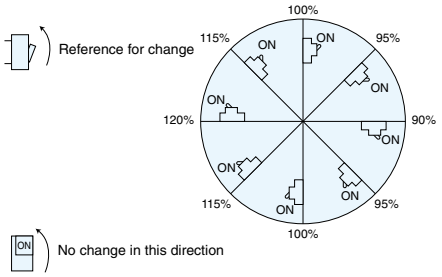

Electric wires which can be connected and applicable screw terminals

CP30-BA

Classification	Shape of terminal		Electric wire size used (mm^2)	Applicable screw terminals	Tightening torque (N • m)
Body	Threaded terminal (standard specification) 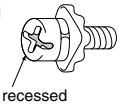 Cross recessed or slotted	20 A or less M4	0.25-1.65	R1.25-4 R1.25-5	M4 1-1.4
			1.04-2.63	R2-4 R2-5	
		30A M5	2.63-6.64	R5.5-4 R5.5-5	M5 1.8-2.2
			6.64-10.52	*8-5NS (made by JST)	
Alarm and auxiliary switch terminals	Wire retaining screw (square washer) Cross recessed or slotted	M3.5	0.25-1.65	R1.25-3.5	0.7-0.9
			1.04-2.63	R2-3.5	

*Use the screw terminal 8-5NS made by JST.

Low Voltage Air Circuit Breakers (AE-SW Series)

Frame (A)			630	1000	1250	1600	2000	2000	2500	3200	4000
Model			AE630-SW	AE1000-SW	AE1250-SW	AE1600-SW	AE2000-SWA	AE2000-SW	AE2500-SW	AE3200-SW	AE4000-SWA
Image			AE1600-SW (Drawout type) ●See the catalog of Low Voltage Air Circuit Breakers, Y-0622, for the details.								
Rated current (CT rating) In (A)			630 (*1)	1000	1250	1600	2000	2000 (*1)	2500	3200	4000
Rated current setting Ir (A) (adjustable) (Rated ambient temperature 40°C) (For marine use 45°C)			315-346.5-378-409.5-441-472.5-504-535.5-567-598.5-630 (*1)	500-550-600-650-700-750-800-850-900-950-1000	625-687.5-750-812.5-875-937.5-1000-1062.5-1125-1187.5-1250	800-880-960-1040-1120-1200-1280-1360-1440-1520-1600	1000-1100-1200-1300-1400-1500-1600-1700-1800-1900-2000	1000-1100-1200-1300-1400-1500-1600-1700-1800-1900-2000 (*1)	1250-1375-1500-1625-1750-1875-2000-2125-2250-2375-2500	1600-1760-1920-2080-2240-2400-2560-2720-2880-3040-3200	2000-2200-2400-2600-2800-3000-3200-3400-3600-3800-4000
Number of poles			3, 4 (*2)								
Rated insulation voltage V			1000								
Current carrying capacity of neutral pole A			630	1000	1250	1600	2000	2000	2500	3200	4000
Rated breaking capacity (kA symmetrical RMS)	IEC 60947-2, EN 60947-2 BS JIS C 8201-2-1 Ann.1 Ann.2 NK, LR, GL, BV, ABS, DNV, CCS	AC690V	65					75			
		AC600V	65					75			
		AC240-500V	65					85			
	Ics = % Icu		100%								
Rated short-time withstand current (kA symmetrical RMS)		1 second	65					75			
Suitability for isolation			Compatible								
Reverse connection			Possible								
Number of operating cycles		Without current	25000					20000			
		With current (690 V AC)	5000				1500	1500		1000	500
Utilization category			B								
Pollution degree			3								
EMC environment condition (environment A or B)			A								
Outline dimension (mm) Height (H) x width (W) x depth (D)	Fixed type	3-pole product	410×340×290					410×475×290			
		4-pole product	410×425×290					410×605×290			
	Drawout type	3-pole product	430×300×368					430×435×368			430×439×368
		4-pole product	430×385×368					430×565×368			430×569×368
Weight (kg) (Without Accessory)	Fixed type	3-pole product	40	41		42	47	60	61	63	81
		4-pole product	50	51		52	57	72	73	75	99
	Drawout type	3-pole product	63	64		65	70	92	93	95	108
		4-pole product	77	78		79	84	113	114	116	136
	Cradle only	3-pole product	26				31	35		36	49
		4-pole product	30				35	43		44	61
CE Marking			Self-declaration								
CCC recognition (☆ Certified)			☆								
Marine approval			☆Certified (NK, LR, GL, BV, ABS, DNV, CCS)								
Automatic tripping device			Electronic (effective value detection)								

●When the MCR is provided, the breaking capacity may be changed. See the catalog of Low Voltage Air Circuit Breakers, Y-0622.
●See the catalog of Low-voltage Air Circuit Breakers, Y-0622, for the details of the accessories.

Notes: *1 AE630-SW and AE2000-SW having low rating types are available. See the catalog of Low Voltage Air Circuit Breakers, Y-0622, for the details.
*2 The 4-pole products do not have obtained the marine approval.
*3 4 (HN) means the neutral poles current capacity is 50% of the rated current, for 4poles.
4 (FN) means the neutral poles current capacity is 100% of the rated current, for 4poles.
*4 ( ) shows the value for 4P FN type.
*5 Marine approval value is 138kA.

■Features

● **Higher reliability by High operating durability (Mechanical)**

● **Increase of rated short-time withstand current**

Combination of the Electronic trip relay (ETR) with MCR (*1) enables increase of the choice coordination range.

● **Applicability to increase and decrease of load and improvement of protection coordination**

The electronic tripping system enables detailed setting of tripping characteristics. The system uses RMS detection resistant to distorted waves.

● **More improved Electronic trip relay (ETR) and transmission functions**

To flexibly meet various requirements, functions suitable for purposes can be selected effectively. In addition, improved measuring functions are provided, so that the circuit breakers are applicable to CC-Link, PROFIBUS-DP and MODBUS transmission and helpful in establishing various electrical circuit measurement monitoring systems and energy-saving systems in combination with measuring display unit breakers.

Notes: *1 MCR is an abbreviation for marking current release. It has INST characteristic only when the circuit breaker in the OFF state turns ON (closes). The circuit breaker will lose the INST characteristic after closing, and it will have LTD and STD characteristics.

● **Various connections**

Various connections for panel structures are available. (See the following figure.)

Connections

Connections / Model	Horizontal (standard)	Vertical (*1) (VT)	Front (FT)	Vertical terminal adapter (VTA)	Front terminal adapter (FTA)
Fixed type (FIX)	(Standard)	FIX-VT	—	(FIX-VTA)	(FIX-FTA)
Drawout type (DR)	(Standard)	(DR-VT)	(DR-FT)	(DR-VTA)	(DR-FTA)

Notes: *1 For AE2000-SWA, AE4000-SWA, AE4000-SW, AE5000-SW and AE6300-SW models, vertical terminal only is available.

Low Voltage Air Circuit Breakers (AE-SW Series)

Frame (A)			4000	5000	6300
Model			AE4000-SW	AE5000-SW	AE6300-SW
Image (Reference)			AE6300-SW (Drawout type) ●See the catalog of Low Voltage Air Circuit Breakers, Y-0622, for the details.		
Rated current (CT rating) In (A)			4000	5000	6300
Rated current setting Ir (A) (adjustable) (Rated ambient temperature 40°C) (For marine use 45°C)			2000-2200-2400-2600-2800-3000-3200-3400-3600-3800-4000	2500-2750-3000-3250-3500-3750-4000-4250-4500-4750-5000	3150-3465-3780-4095-4410-4725-5040-5355-5670-5985-6300
Number of poles			3, 4 (HN, FN) (*3)		
Rated insulation voltage V			1000		
Current carrying capacity of neutral pole A			2000 (4000) (*4)	2500 (5000) (*4)	3150 (6300) (*4)
Rated breaking capacity (kA symmetrical RMS)	IEC 60947-2, EN 60947-2 BS JIS C 8201-2-1 Ann.1 Ann.2 NK, LR, GL, BV, ABS	AC690V	85		
		AC600V	85		
		AC240-500V	130 (*5)		
	Ics = % Icu		100%		
Rated short-time withstand current (kA symmetrical RMS)		1 second	100		
Suitability for isolation			Compatible		
Reverse connection			Possible		
Number of operating cycles		Without current	10000 (3P) /5000 (4P)		
		With current (690 V AC)	1000		
Utilization category			B		
Pollution degree			3		
EMC environment condition (environment A or B)			A		
Outline dimension (mm) Height (H) x width (W) x depth (D)	Fixed type	3-pole product	414×873×290		
		4-pole product	414×1003×290		
	Drawout type	3-pole product	480×875×368		
		4-pole product	480×1005×368		
Weight (kg) (without Accessory)	Fixed type	3-pole product	160	160	160
		4-pole product	180	180	180
	Drawout type	3-pole product	233	233	240
		4-pole product	256	256	263
	Cradle only	3-pole product	118	118	125
		4-pole product	133	133	140
CE Marking			Self-declaration		
CCC recognition (☆ Certified)			☆		
Marine approval			☆Certified (NK, LR, GL, BV, ABS)		
Automatic tripping device			Electronic (effective value detection)		

■Electronic trip relay (ETR) Type code

□ □ – □

● Main setting module

WS1, WB1, WM1, WF1	AE630-1600-SW, AE2000-3200-SW, AE4000-SW
WS2, WB2, WM2, WF2	AE2000-SWA, AE4000-SWA, AE5000-SW
WS3,WB3,WM3, WF3	AE6300-SW

WS : General use
WM: Generator protection use
WB : INST/MCR only
WF : Protective coordination use

● Optional setting module

G1: Ground fault protection
N5: Neutral pole 50% protection
E1: Earth leakage protection
AP: 2nd Additional Pre-alarm
NA: Without optional setting

● ETR Auxiliary Equipment

☐ Temperature alarm(TAL)
☐ MCR switch(MCR-SW)

● Power supply

P1: AC·DC100-240V
P2: DC24-60V
P3: AC100-240V / DC100-125V with output contact
P4: DC24-60V with output contact
P5: DC100-240V with output contact (SSR)

Additional function

☐ Extension module(EX1)
- ☐ Display(DP1)
- ☐ Display onto panel board(DP2)
- ☐ VT unit(VT)

Network

- ☐ BIF-CC
- ☐ BIF-PR
- ☐ BIF-MD

Wire system (when EX1 is specified)

EX1
- ☐3ϕ3W
- ☐3ϕ4W
- ☐Normal connection
- ☐Reverse connection

Normal connection: Upper terminal is connected to power supply.
Reverse connection: Lower terminal is connected to power supply.

*The display is optional.

For the details of the characteristics, alarm contact output and expanded functions of the ETR, see the catalog of Low Voltage Air Circuit Breakers, Y-0622.

Earth Leakage Relays

Model			Interchangeable leakage relays (*1)					
			Electrical self-hold type		Mechanical self-hold type		Harmonic surge ready Electrical self-hold type	Harmonic surge ready Mechanical self-hold type
		Hole diameter mm	NV-ZBA		NV-ZSA		NV-ZHA	NV-ZLA
Model name of ZCT combined (*5)		15	ZT15B	–	ZT15B	–	ZT15B	ZT15B
		30	ZT30B	–	ZT30B	–	ZT30B	ZT30B
		40	ZT40B	–	ZT40B	–	ZT40B	ZT40B
		60	–	ZT60B	–	ZT60B	ZT60B	ZT60B
		80	–	ZT80B	–	ZT80B	ZT80B	ZT80B
		100	–	ZT100B	–	ZT100B	ZT100B	ZT100B
Image								
Phase line type			3ϕ4W, 3ϕ3W, 1ϕ3W, 1ϕ2W					
Control voltage AC V		JIS	120 • 240 selectable		120 • 240 selectable 240 • 415 selectable		–	–
		UL/JIS (*2) UL/CE (*3)	–		–		120 • 240 selectable 240 • 440 selectable	120 • 240 selectable 240 • 440 selectable 480
JIS	High speed type	Rated sensitivity current mA	30 100 • 200 • 500 selectable	100 • 200 • 500 selectable	30 100 • 200 • 500 selectable	100 • 200 • 500 selectable	–	–
		Max. operating time (s)	0.1		0.1			
	Delay type	Rated sensitivity current mA	100 • 200 • 500 selectable		100 • 200 • 500 selectable (200 • 500 • 1000 selectable)			
		Operating time (s) (*4)	0.3 • 0.8 • 1.6 selectable		0.3 • 0.8 • 1.6 selectable			
		Inertial non-operating time (s) or longer than (s)	0.1 • 0.5 • 1.1		0.1 • 0.5 • 1.1			
UL/JIS	High speed type	Rated sensitivity current mA	–		–		30 50	30 50
		Max. operating time (s)					0.1	0.1
	High speed • Delay type	Rated sensitivity current mA					100 • 200 • 500 selectable	100 • 200 • 500 selectable
		Max. operating time (s) (*4)					0.1 • 0.45 • 1.0 selectable	0.1 • 0.45 • 1.0 selectable
		Inertial non-operating time (s) or longer than (s)					– • 0.1 • 0.5	– • 0.1 • 0.5
UL/CE	High speed type	Rated sensitivity current mA	–		–		30 • 50 • 100 selectable	30 • 50 • 100 selectable
		Max. operating time (s) at 5IΔn					0.04	0.04
	Delay type	Rated sensitivity current mA					100 • 300 • 500 selectable 300 • 500 • 1000 selectable	100 • 300 • 500 selectable 300 • 500 • 1000 selectable
		Max. operating time (s) at 2IΔn (*4)					0.45 • 1.0 selectable	0.45 • 1.0 selectable
		Inertial non-operating time (s) at 2IΔn					0.1 • 0.5	0.1 • 0.5
Earth leakage indication			Electric type (LED)		Mechanical type (button)		Electric type (LED)	Mechanical type (button)
Resetting method			Push button or control power switch off		Push button (conbined with earth leakage indicator)		Push button or control power switch off	Push button (conbined with earth leakage indicator)
Built-in contact	Configuration		1c		1a1c		1a1c	1a1c
	Continuous current capacity A		5		5		5	5
	Contact capacity A		cosϕ=1 / cosϕ=0.4 L/R=0.007 120VAC 5 2 240VAC 5 2 24VDC 5 2		cosϕ=1 / cosϕ=0.4 L/R=0.007 120VAC 5 3 240VAC 3 2 415VAC 2 1 30VDC 4 3 100VDC 0.4 0.4 200VDC 0.2 0.2		cosϕ=1 / cosϕ=0.4 L/R=0.007 120VAC 5 2 240VAC 5 2 24VDC 5 2 Use auxiliary relay for AC415V contact.	cosϕ=1 / cosϕ=0.4 L/R=0.007 120VAC 5 3 240VAC 3 2 480VAC 1 1 30VDC 3 3
Connection		Front	●Clamp terminal		●Clamp terminal		●Clamp terminal	●Clamp terminal
		Rear	–		●Clamp terminal		●Clamp terminal	●Clamp terminal
Standard attachment (Front connection)			Mounting screw					
Mass kg		Relay	0.3		0.4		0.4	0.4
External accessories	Terminal cover		● (TC-ZBA)		● (TC-ZSA)		● (TC-ZSA) (*6)	● (TC-ZSA) (*6)
	Mounting hook for IEC 35mm rail (DIN rail) Fixture		● (DIN-ZBA)		–		–	–
Max. consumption VA			3					
Conforming standard	US UL standard (UR certified)		–		–		UL1053 Recognized component (File No.E196562)	UL1053 Recognized component (File No.E196562)
	Canada CSA standard		–		–		LR103083(Certified No.)	LR103083(Certified No.)
	European CE marking		–		–		Declaration for conformity IEC 60947-2 AnnexB EN 60947-2 AnnexB	Declaration for conformity IEC 60947-2 AnnexB EN 60947-2 AnnexB

Notes:
- *1 Interchangeable leakage relays can be easily combined with other relays and our ZCT. However, products with 30mA sensitivity (excluding NV-ZHA/ZLA) can only be used in combination with ZT15B, ZT30B and ZT40B.
- *2 Indicates the UL-standard control voltage. UL, CSA and JIS standards are indicated together. For JIS voltage indications, 100-200V changeover is 120-240V changeover, 200-415V changeover is 240-440V changeover, and 460V and 480V are described together. When ordering, specify "UL/JIS".
- *3 Indicates the UL-standard control voltage. UL, CSA and CE standards are indicated together. For CE voltage indications, 120-230V changeover is 120-240V changeover, 230-440V changeoever is 240-440V selectable, which are described together. When ordering, specify "UL/CE".
- *4 When operating times are 0.3 and 0.45sec, 0.8 and 1.0sec and 1.6sec, the relay operates between 0.15 and 0.45sec, 0.6 and 1.0sec and 1.2 and 2.0sec, respectively.
- *5 Can be combined with an interchangeable ZCT equipped with a primary conductor. Refer to the next page for details.
- *6 Not UL-certified.

Remarks:
1. Relays with rates shown in parentheses are special-order.
2. The relay complies with CE marking conformity declaration only when used with CE marking type MCCB with a voltage tripping device to interrupt current during ground fault.
3. NV-ZBA/ZSA

Control voltage	Available voltage range	Example of applicable circuit voltage
120V	80-126V	100 • 110V • 120V
240V	160-252V	200 • 220 • 240V
415V	320-484V	400 • 415 • 440V

4. NV-ZHA/ZLA

Control voltage	Available voltage range	Example of applicable circuit voltage
120V	80-132V	100 • 110 • 120V
240V	160-264V	200 • 220 • 230 • 240V
440V	304-484V	380 • 400 • 415 • 440V
480V	368-528V	460 • 480V

Interchangeable ZCT

Type		ZT15B	ZT30B	ZT40B	ZT60B	ZT80B	ZT100B
Aperture diameter (mm)		15	30	40	60	80	100
Mass (kg)		0.2	0.4	0.6	2.0	2.6	3.3
Rated short time current		50 (peak value)					
Dimensions (mm)	a	48	68	85	140	160	185
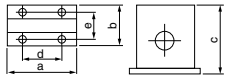	b	52	52	52	90	90	90
	c	70	90	100	150	169	190
	d	25	50	50	100	100	100
	e	40	40	40	70	70	70

ZCT aperture diameter and wire size

	ZCT aperture diameter (mm)	15	30	40	60	80	100
		Max. 600V rated wire size in mm^2 (current in amperes)					
1ϕ2w	Polyvinyl-chloride insulated wire	14 (88)	60 (217)	150 (395)	325 (650)	600 (992)	800 (1185)
	Cross-linked polyethylene insulated cable	2 (33)	38 (190)	60 (260)	250 (655)	400 (870)	600 (1140)
1ϕ3w 3ϕ3w	Polyvinyl-chloride insulated wire	8 (61)	38 (162)	100 (298)	250 (556)	500 (842)	725 (1095)
	Cross-linked polyethylene insulated cable	2 (33)	22 (135)	60 (260)	200 (560)	325 (760)	600 (1140)
3ϕ4w	Polyvinyl-chloride insulated wire	8 (61)	38 (162)	100 (298)	150 (395)	325 (650)	600 (992)
	Cross-linked polyethylene insulated cable	–	14 (105)	38 (190)	100 (365)	250 (655)	400 (870)

Interchangeable ZCTs with primary conductors

Type		ZTA600A	ZTA1200A	ZTA2000A
Number of poles		3		
Rated voltage (VAC)		600		
Rated short time current (kA)		100 (peak value)		
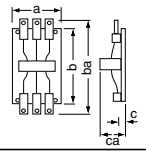	a	227	227	360
	b	256	298	250
	ba	366	444	594
	c	42	78	79
	ca	125	176	214

ELRs with a ZCT with primary conductors

Frame (A)		600	1200	2000	3200
Type	ZBA	Interchangeable ELR and interchangeable ZCTs with primary conductors			NV-ZBA3200
	ZSA				NV-ZSA3200
	ZHA				NV-ZHA3200
	ZLA				NV-ZLA3200
Number of poles		3			
Rated voltage (VAC)		600			
Rated short time current (kA)		100 (peak value)			
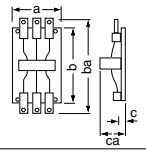	a	227	227	360	490
	b	256	298	250	320
	ba	366	444	594	868
	c	42	78	79	111
	ca	125	176	214	290
Mass (kg)		6.5	11	27	54

			Control voltage (VAC)	Rated current sensitivity (mA)	Max. operating time (s)	Inertial non-operating time (s)
Specification of ELRs	High-speed type	ZBA	120 • 240 (*1)	100 • 200 • 500 (*1)	0.1	—
		ZSA	120 • 240 (*1) 240 • 415 (*1)	100 • 200 • 500 (*1)		
	Time-delay type (High-speed • Time-delay type)	ZBA	120 • 240 (*1)	100 • 200 • 500 (*1)	0.3 • 0.8 • 1.6 (*1)	0.1 • 0.5 • 1.1
		ZSA	120 • 240 (*1) 240 • 415 (*1)	100 • 200 • 500 (*1) (200 • 500 • 1000 (*1))	0.3 • 0.8 • 1.6 (*1)	0.1 • 0.5 • 1.1
		ZHA	120 • 240 (*1) 240 • 440 (*1)	100 • 200 • 500 (*1)	0.1 • 0.45 • 1.0 (*1)	– • 0.1 • 0.5
				100 • 300 • 500 (*1) 300 • 500 • 1000 (*1)	0.45 • 1.0 (*1) (at 2IΔn)	0.1 • 0.5 (at 2IΔn)
		ZLA	120 • 240 (*1) 240 • 440 (*1) 480	100 • 200 • 500 (*1)	0.1 • 0.45 • 1.0 (*1)	– • 0.1 • 0.5
				100 • 300 • 500 (*1) 300 • 500 • 1000 (*1)	0.45 • 1.0 (*1) (at 2IΔn)	0.1 • 0.5 (at 2IΔn)

Note: *1 Selectable.

MEMO

3

Special-purpose Breakers

1) Mag Only (Instantaneous Tripping Circuit Breakers) 58
2) DC MCCBs and DSN Switches 58
3) 400Hz MCCBs 58

1. Mag Only (Instantaneous Tripping Circuit Breakers)

Fixed	NF63-CV/SV/HV	AC, DC	Rated current x 10 (AC) (DC)
	NF125-CV/SV/HV	AC, DC	
	NF250-CV/SV/HV	AC, DC	
	NF400-CW/SW NF630-CW/SW	AC, DC	
Adjustable	NF800-SEW	AC	High: Rated current x 10 Low: Rated current x 2
	NF800-SDW	DC	High: 8000A Low: 3200A
	NF1000-SEW NF1250-SEW	AC	High: Rated current x 10 Low: Rated current x 2
	NF1600-SEW	AC	High: Rated current x 10 Low: Rated current x 2
	NF1250-SDW NF1600-SDW	DC	High: 8000A Low: 3200A

Remarks: 1. The size, weight, accessories, etc., are all identical to the same-designation C, S and H series breakers.
2. For more details, contact your dealer.

2. DC MCCBs and DSN Switches

Breaking is more difficult with direct currents because the current value never reaches zero. While ordinary DC breakers are suitable for low voltages, special-voltage DC breakers are recommended for voltages in excess of 250VDC. Breakers for 550V are all 4-pole models.
The size, shape, drilling plan, accessories, etc., are all identical to the S Series breakers with the same designations.

Wiring diagram for DC usage.

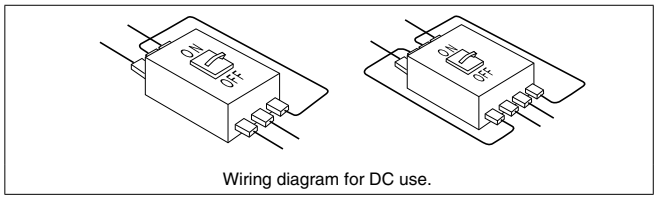

Wiring diagram for DC use.

Remark: 1. The tripping characteristics will change if the wiring differs from the one shown here.

Model	NF63-SV		NF125-SV		NF250-SV		NF400-SW		NF630-SW		NF800-SDW		NF1250-SDW		NF1600-SDW	
Number of poles	3	4	3	4	3	4	3	4	3	4	3	4	3	4	3	4
Rated voltage (VDC)	400	550	440	550	500	600	500	600	500	600	500	600	500	600	500	600
Rated breaking capacity (kA) IEC 60947-2 (Icu/Ics)	2/2		10/10		20/20		40/40		40/40		40/40		40/20		40/20	

Remark: 1. Time constant: 10ms or below.
2. NF1250-SDW 4P and NF1600-SDW 3P/4P are Mag Only (Instantaneous Tripping Circuit Breakers).

●DC side

These breakers are designed as thyristor-Leonard system DC side breakers. They protect the thyristor from short circuiting when there is a power or communication failure (Mag Only breakers can also be used for this purpose). Use these breakers in combination with fast fuses for even greater protection.

Model	NF125-SV		NF250-SV		NF400-SW		NF630-SW		NF800-SDW		NF1250-SDW		NF1600-SDW	
Number of poles	2	3	2	3	2	3	2	3	2	3	2	3	2	3
Rated voltage (VDC)	250	440	300	500	250	480	250	480	250	480	250	480	250	480
Rated breaking capacity (kA) IEC 60947-2 (Icu/Ics)	40/40	10/10	20/20		20/20		20/20		20/20		20/20		20/20	
Instantaneous trip current min.)	3 times rated current		3 times rated current		900A		1000A		1400A		2500A		3200A	

●DSN switches

These are standard MCCBs without the automatic tripping element. The tripping capacity is about six times the rated current.

The appearance, size, drilling plan and available accessories are all identical to similar standard S and C Series MCCBs.

Model	DSN63-CV		DSN125-CV		DSN250-CV		DSN400-CW		DSN630-CW	DSN800-CW
Rated current (A)	63		125		250		400		630	800
Number of poles	2	3	2	3	2	3	2	3	3	3
Rated voltage (AC/DC)	500/250		500/250		500/250		600/250		600/250	600/250
Max. switching current (AC/DC)	378/155		750/310		1500/625		2400/1000		3780/1575	4800/2000

Model	DSN32-SV		DSN63-SV		DSN125-SV			DSN125-SGV			DSN160-SGV			DSN250-SV			DSN250-SGV			DSN400-SW			DSN630-SW		DSN800-SW		DSN1000-SW		DSN1250-SW		DSN1600-SW	
Rated current (A)	32		63		125			125			160			250			250			400			630		800		1000		1250		1600	
Number of poles	2	3	2	3	2	3	4	2	3	4	2	3	4	2	3	4	2	3	4	2	3	4	3	4	3	4	3	4	3	4	3	4
Rated voltage (AC/DC)	500/250		500/250		690/250			690/300			690/300			690/250			690/300			690/250			690/250		690/250		690/250		690/250		690/250	
Max. switching current (AC/DC)	192/80		378/155		750/310			750/315			960/400			1500/625			1500/625			2400/1000			3780/1575		4800/2000		6000/2500		7500/3125		9600/4000	

3. 400Hz MCCBs

Standard MCCBs cannot be used in 400Hz circuits. When standard MCCBs are used in high-frequency circuits (eq. 400Hz), the instantaneous characteristics are shifted higher. The 400Hz MCCB is recommended for use in 400Hz circuits.

●Specifications

The appearance, size, rated interrupting capacity, drilling plan, accessories, etc., are all identical to the standard S and H Series breakers of the same designation.

Model		NF125-SV			NF125-HV			NF250-SV			NF250-HV			NF400-SW			NF400-SEW		NF630-SW (*1)		NF630-SEW		NF800-SEW		NF1250-SEW		NF1600-SEW	
Rated current (A)		16, 20, 32, 40, 50, 63, 80, 100			16, 20, 32, 40, 50, 63, 80, 100			125, 150 175, 200			125, 150 175, 200			225, 250 300, 350			200-350 adjustable		400, 500		300-500 adjustable		400-600 adjustable		600-800 adjustable		800-1200 adjustable	
Number of poles		2	3	4	2	3	4	2	3	4	2	3	4	2	3	4	3	4	3	4	3	4	3	4	3	4	3	4
Rated insulation voltage (V)		690																										
Rated breaking capacity (kA) IEC 60947-2 (Icu/Ics)	690V	8/8			10/8			8/8			10/8			10/10			10/10		10/10		10/10		10/10		25/13		25/13	
	500V	18/18			30/23			30/30			50/38			30/30			30/30		30/30		30/30		30/30		65/33		65/33	
	440V	25/25			50/38			36/36			65/65			42/42			42/42		42/42		42/42		42/42		85/43		85/43	
	400V	30/30			50/38			36/36			75/75			45/45			50/50		50/50		50/50		50/50		85/43		85/43	
	230V	50/50			100/75			85/85			100/100			85/85			85/85		85/85		85/85		85/85		125/63		125/63	

Note: *1 Instantaneous trip current : Rated current x 14 (Fix)

4

Selection

1 Construction and Operation 60

1) Construction of MCCB 60
2) Construction of ELCB 62

2 Selection of MCCB and ELCB 63

1) Selecting Procedure 63
2) Features and Performance 64
3) Current-carrying Capacity and Operating Temperature 66
4) Application of Circuit Breaker According to Breaking Capacity 68
5) Selection of Circuit Breaker for Electric Lamp or Heater Circuit 69
6) Selection of Circuit Breaker for Motor Branch Circuit 71
7) Selection of Motor Protection Breaker 73
8) Selection of Circuit Breaker for Inverter Circuit 74
9) Selection of Circuit Breaker for Transformer Primary Side 75
10) Combination for Selective Breaking 79
11) Combinations for Cascade Breaking 82
12) International Standard Conformance List 84

3 Selection of ELCB 87

1) Electric Shock Protection 87
2) ELCB Grounding Method 87
3) Rated Voltage and Number of Poles 88
4) Earth Fault Protection Coordination and Combination of Devices 89

1. Construction of MCCB

●Adjustable Instantaneous Tripping Current

On electronic molded case circuit breakers, the instantaneous tripping current can be adjusted only by turning the knob. Therefore, optimum characteristics for load can be obtained.

Example of adjusting knob

●Arc-Extinguishing Device

MCCBs feature excellent arc-extinguishing performance by virtue of the optimum combination of grid gap, shape, and material.

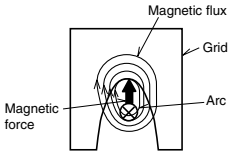

Arc extinction

●Switching Mechanism

The contacts open and close rapidly, regardless of the moving speed of the handle, minimizing contact wear and ensuring safety.

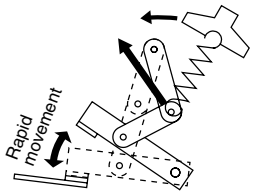

Link-mechanism operation

●Trip Button (Push to Trip)

Enables tripping mechanically from outside, for confirming the operation of the accessory switches and the manual resetting function.

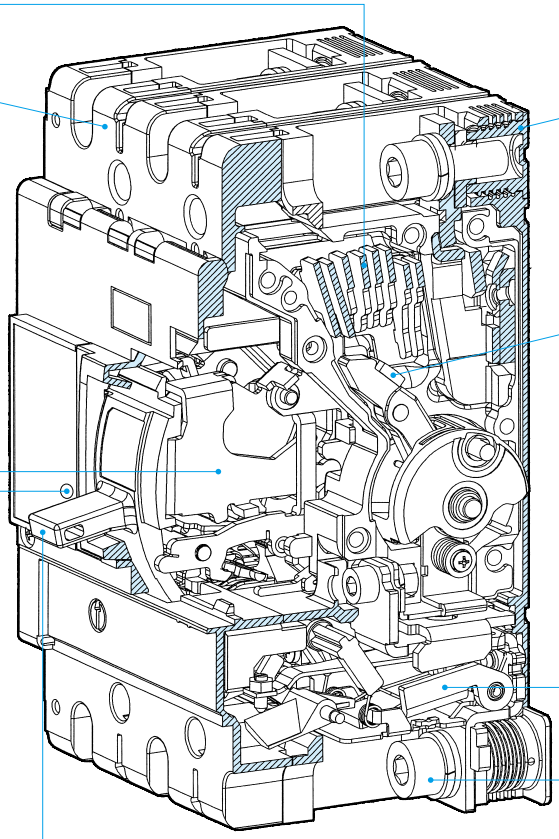

Fig. 4.1 Construction

●Overcurrent Tripping Device

Detects overcurrent and trips the circuit breaker.

●Handle

1. Trip indication
   The automatically tripped condition is indicated by the handle in the center position between ON and OFF, the yellow (or white) line cannot be seen in this position.
2. Resetting
   Resetting after tripping is performed by first moving the handle to the OFF position to engage the mechanism, then returning the handle to ON to reclose the circuit.
3. Trip-Free
   Even if the handle is held at ON, the breaker will trip if an overcurrent flows.

ON OFF Trip

Handle indication

4. Contact On Mechanism
   Even in the worst case in which welding occurs owing to an overcurrent, the breaker will trip and the handle will maintain to ON, indicating the energizing state.

4-pole Breaker

- The 4-pole breaker is designed for 3-phase 4-wire circuits. A neutral pole without an overcurrent tripping element is provided at the right end. The construction and operation are the same as class S, H and U breakers. (Electronic molded case circuit breakers with frame size of 1600A or less have overcurrent tripping elements on the neutral poles.)
- Since the four poles are simultaneously opened and closed, the user will not fail in turning on the neutral pole or carelessly open the pole. (The standard construction is designed to close the neutral pole earlier and open it later than the voltage pole.)

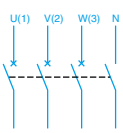

Fig. 4.2 4-pole Breaker

(NF250-SV)

Automatic Tripping Devices

Thermal-Magnetic Type

(NF32-SV, NF63-CV/SV/HV, NF125-CV/SV/HV/SXV/LXV/HXV, NF250-CV/SV/HV/SXV/LXV/HXV
NF400-CW/SW, NF630-CW/SW, NF800-SDW, etc.)

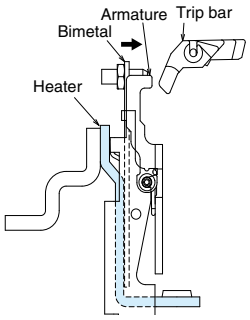

Fig. 4.3

1. Time-Delay Operation
   An overcurrent heats and warps the bimetal to actuate the trip bar.
2. Instantaneous Operation
   If the overcurrent is excessive, the amature is attracted and the trip bar actuated.

Thermal-Magnetic Type (NF1250-SDW)

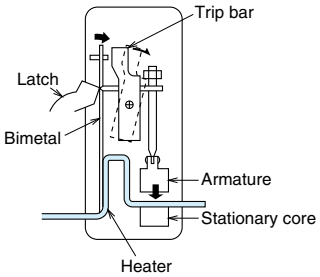

Fig. 4.4

1. Time-Delay Operation
   An overcurrent heats and warps the bimetal to actuate the trip bar.
2. Instantaneous Operation
   If the overcurrent is excessive, magnetization of the stationary core is strong enough to attract the armature and actuate the trip bar.

Hydraulic-Magnetic Type (NF30-CS etc.)

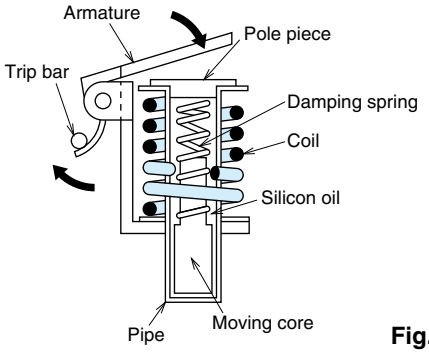

Fig. 4.5

1. Time-Delay Operation
   At an overcurrent flow, the magnetic force of the coil overcomes the spring, the core closes to the pole piece, attracts the armature, and actuates the trip bar.
   The delay is obtained by the viscosity of silicon oil.
2. Instantaneous Operation
   If the overcurrent is excessive, the armature is instantly attracted, without the influence of the moving core.

Principle of Electronic Trip Relay (ETR) Operation

(NF125-SEV/HEV, NF250-SEV/HEV, etc.) (NF400-SEW~NF800-CEW
NF1000-SEW~NF1600-SEW, etc.)

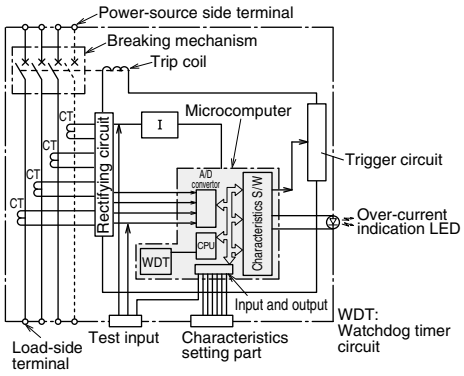

Fig. 4.6.1

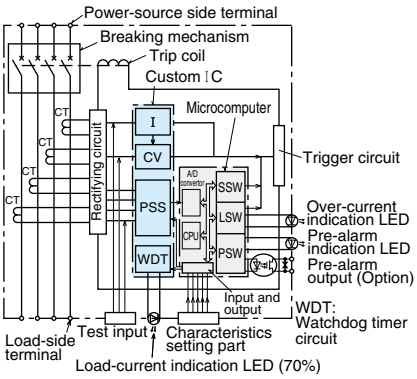

Fig. 4.6.2

1. The current flowing in each phase is monitored by a current transformer (CT).
2. Each phase of the transformed current undergoes full-phase rectification in the rectifier circuit.
3. After rectification, each of the currents are converted by a peak-conversion and an effective-value conversion circuit.
4. The largest phase is selected from the converted currents.
5. Each time-delay circuit generates a time delay corresponding to the largest phase.
6. The trigger circuit outputs a trigger signal.
7. The trip coil is excited, operating the switching mechanism.

Number of tripping devices

Descriptions (e.g. 2P1E and 2P0E) are not given in the number of poles fields of some models. For these models, the same number of overcurrent tripping devices as the number of poles is provided in the circuit breakers.
2 poles: 2P2E, 3 poles: 3P3E, 4 poles: 4P4E or 4P3E
(Some 4-pole models do not have overcurrent tripping devices for the neutral poles.)

2. Construction of ELCB

●Arc-Extinguishing Device

ELCBs feature excellent arc-extinguishing performance by virtue of the optimum combination of grid gap, shape, and material.

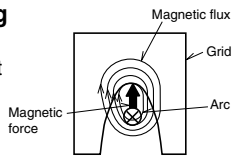

Arc extinction

●Trip Button (Push to Trip)

Enables tripping mechanically from outside, for confirming the operation of the accessory switches and the manual resetting function.

●Overcurrent Tripping Device

The use of the proven mechanism of ELCBs ensures reliable detection of overcurrent.

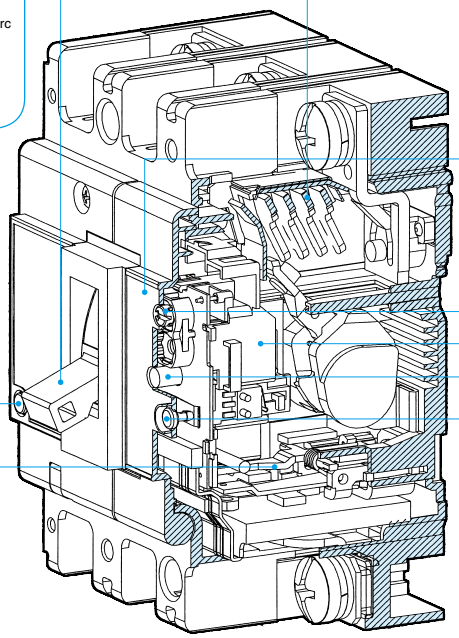

Fig. 4.7 Construction

●Switching Mechanism

The contacts open and close rapidly, regardless of the moving speed of the handle, minimizing contact wear and ensuring safety.

●Window Frame

Since the handle, trip button, test button, leakage display button and nameplate are located in one area, it is easy to cut the panel.

●Sensitivity Switching Device

The rated sensitivity current can be easily changed.
A 3-stage switching device for 100, 200 and 500 mA and a 2-stage switching device for 200 and 500 mA are available.

●Leakage Display

Target type with display button. The display is automatically reset by the handle.

●Test Button

The button has excellent durability and performance to withstand inspection at start.

●Leakage Tripping Device

- ●The semiconductor circuit unit, which is the most important part of the device, is an electronic type using highly reliable ICs.
- ●For improvement of the function for removing harmonic and surge components, two filters are provided to prevent unnecessary operations.
- ●The ZCT detects any minute current. It is covered with a magnetic shield and never operates unnecessarily owing to motor starting current.

Rated operational voltage	Applicable circuit voltage	Available voltage range
100-240V	100/110/200/220/230/240V	80 to 264V
100-440V	100/110/200/220/240/254/265/380/400/415/440V	80 to 484V
200-440V	200/220/240/254/265/380/400/415/440V	160 to 484V
100-200-415V	100/110/200/220/240/254/265/380/400/415/440V	80 to 484V
200-415V	200/220/240/254/265/380/400/415/440V	160 to 484V

●Operation

1. When an earth fault occurs, voltage is induced on the secondary side of the ZCT.
2. Factors of unnecessary operations, i.e. surge and noise components, are removed from the induced voltage.
3. The signal level is discriminated, and, when the level exceeds the specified level, the electromagnetic device is excited to trip the circuit breaker body.

Overload and short-circuit

The use of the proven mechanism of ELCBs ensures reliable detection of overcurrent and earth fault to break the circuit.

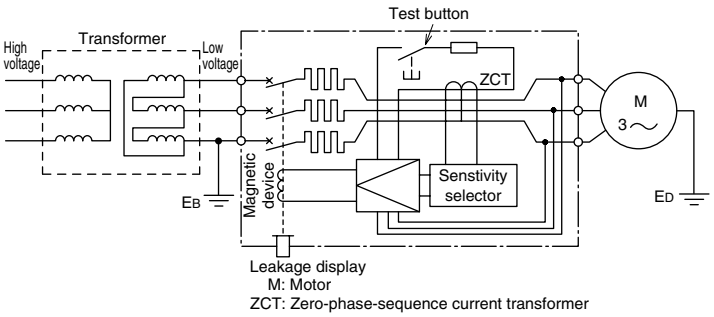

Fig. 4.8 Circuit configuration of ELCB (NV63-SV)

Revision to EN and GB Standards

Products for European markets must conform to the CE Marking Directives. To affix the CE mark to a product, it is necessary that the product conforms to European Standard (EN Standard).
Products for China must conform to Chinese GB Standard to affix the CCC mark.
The third edition (2003) of EN Standard for circuit breakers, EN 60947-2, and GB Standard GB 14048.2 (2008) prescribe that the functions of earth leakage circuit breakers should normally work even in open phase condition. Products based on the previous EN Standard (second edition) have not been approved since June, 2006. Products based on the previous GB Standard (2001) have not been approved since January, 2011.

☆WS-V Series Earth Leakage Circuit Breakers (conforming to CE and CCC Standards) and UL 489 Listed Molded Case Circuit Breakers with earth leakage protection conform to the third edition of EN 60947-2 and GB 14048.2 2008 as 3-phase power supply earth leakage circuit breakers.

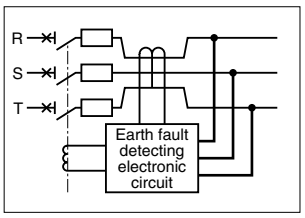

Fig. 4.9 Circuit diagram in 3-phase power supply ELCB

1. Selecting Procedure

MCCB (NF)

Circuit used Applicable standard	Phase and wire type, voltage, DC or AC, frequency, standard	●Applicable phase and wire type 2 poles: 1-phase 2-wire 3 poles: 1-phase 2-wire, 1-phase 3-wire, 3-phase 3-wire 4 poles: 3-phase 4-wire ●Specification list (pages 12 to 33) ●List of received certifications (page 84)
Determination of rated current	Kind and size of electric wire Kind and working conditions of load Selection conditions in internal standard and electrical equipment technical standards	●Relationship between temperature and electric wire (page 66) ●Selection of circuit breaker for motor branch circuit (page 71) ●Selection of circuit breaker for electric lamp or electric heater circuit (page 69) ●Selection of motor protection breaker (page 73) ●Selection of circuit breaker for inverter circuit (page 74) ●Selection of circuit breaker on transformer primary side (page 75)
Determination of interrupting capacity	Transformer capacity Electric wire thickness and length	●Application based on breaking capacity (page 68) ●Table of combinations for cascade breaking (page 81)
Examination of coordination	Selective breaking	●Operating characteristic curve (pages 140 to 216) ●Table of combinations for selective breaking (page 79)
Determination of model	Use	●Circuit Breakers for special purpose (pages 58)
Installation method	Connection and molded case circuit breaker	●Installation and connection (pages 92 to 100) ●Boxed Circuit Breakers (page 130)
Accessories	Internal accessories and external accessories Electric operation	●Internal accessories (pages 102 to 116) ●External accessories (pages 117 to 137) ●Electrical Operated Circuit Breakers (pages 133 to 135)

ELCB (NV)

Circuit used Applicable standard	Phase and wire type, voltage, DC or AC, frequency, standard	●Specification list (pages 22 to 32) ●List of received certifications (page 84)
Determination of rated current	Kind and size of electric wire Kind and working conditions of load Selection conditions in internal standard and electrical equipment technical standards	●Relationship between temperature and electric wire (page 66) ●Selection of circuit breaker for motor branch circuit (page 71) ●Selection of circuit breaker for electric lamp or electric heater circuit (page 69) ●Selection of circuit breaker for inverter circuit (page 74) ●Selection of circuit breaker on transformer primary side (page 75)
Determination of interrupting capacity	Transformer capacity Electric wire thickness and length	●Application based on breaking capacity (page 68) ●Table of combinations for cascade breaking (page 81)
Determination of rated sensitivity current	Purpose of protection Obligation of installation	●Purpose of protection (page 86) ●Selection of rated sensitivity current of circuit breaker for inverter circuit (page 74) ●Method of switching between rated voltage and rated sensitivity current (page 246)
Examination of coordination	Selective breaking Ground fault protection coordination	●Operating characteristic curve (pages 180 to 203) ●Table of combinations for selective breaking (page 79) ●Combinations of ground fault protection coordination and devices (page 89)
Determination of model	Use	●Circuit Breakers for special purpose (pages 58)
Installation method	Connection and molded case circuit breaker	●Installation and connection (pages 92 to 100) ●Boxed Circuit Breakers (page 130)
Accessories	Internal accessories and external accessories Electric operation	●Internal accessories (pages 102 to 116) ●External accessories (pages 117 to 137) ●Electrical Operated Circuit Breakers (pages 133 to 135)

2. Features and Performance

■Features of MCCB

●Molded Case Circuit Breakers (NF)

①**Time-delay trip function**

This function conforms to the allowable current and time characteristics of electric wire and prevents operation caused by the staring current of a load device. When the overcurrent is large, the operating time is short, and when the overcurrent is small, the operating time is long.

●In the case of electronic type

The electronic time-delay trip function includes a long time limit trip function conforming to the allowable current and time characteristics of conductor and a short time limit trip function for selective breaking for branch NFB. The short time limit function operates after a delay of some cycles (0.06 to 0.3 s) at overcurrent exceeding the short time limit tripping current. These functions can be adjusted by the knob.

②**Instantaneous trip function**

This function breaks the circuit immediately when short-circuit current flows. A circuit breaker on which the instantaneous tripping current is adjustable has the advantage that coordination in operation with other protective devices, such as electromagnetic switches and low-voltage air circuit breakers, can be easily obtained. The instantaneous operating time (total interrupting time) can be divided as shown in Fig. 4-10.

③**Operating characteristic curve**

The operating characteristic curve indicates the relationship between magnitude of overcurrent and operating time. The maximum-minimum operating characteristic curve indicates that the operating time is in the range. Figs. 4-11 and 4-12 show examples of operating characteristic curves.

Table 4-1 Overcurrent trip operating time (IEC 60947-2)

Rated current of circuit breaker (A)	Operating time for 130% current
63 or less	Within 1 hr.
Over 63	Within 2 hrs.

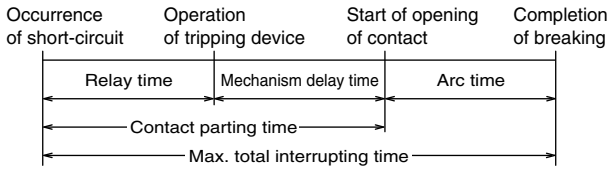

Since the relay time is normally 2 to 5 ms, if large current flows for more than this time, the circuit breaker operates instantaneously.

Fig. 4.10 Instantaneous operating time

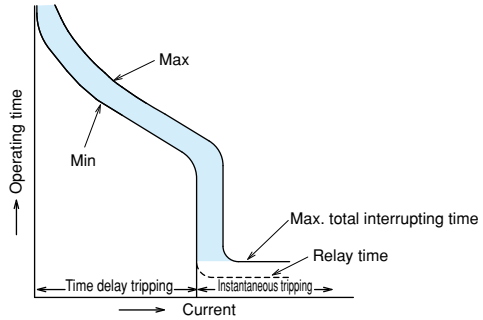

Fig. 4.11 Example of operating characteristic curve

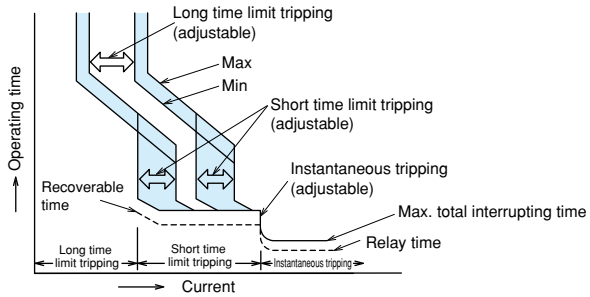

Fig. 4.12 Example of operating characteristic curve of electronic type

●Motor Protection Breakers

●The motor protection breakers are circuit breakers to be used to protect general induction motors. They prevent motors being burnt not only by short-circuit current of circuits, but also by overcurrent caused by overload operation and locking of motors.

●The Motor Protection Breakers are finely classified according to rated current so that the breakers can be applied to various types of motors.

●Although their time-delay trip and instantaneous trip functions are almost the same as those of MCCB, they are designed to operate within 2 seconds to 30 seconds at 600% of the rated current in consideration of protection from motor starting current and locked current.

●There are many kinds of motors, and the motors have various allowable characteristics for overcurrent. Therefore, when applying a motor breaker, it is necessary to compare the allowable characteristics and the operating characteristics of the motor breaker.
Note that, particularly, submersible motors may not be protected by ordinary motor breakers because their allowable locked time is short.

●When the motor starting current is large and the starting time is long and when the frequency of intermittent operation is high, motor breakers are unsuitable. In such a case, the use of a combination of an electromagnetic switch and MCCB (combination starter) is recommended.

●Characteristics of MCCB for DC circuits

When a 2-pole MCCB (250 V DC or less) is used on a DC circuit, connect the poles in series. When a 3- or 4-pole MCCB is used, refer to page 60 (for special DC voltage) or pages 14 to 21 (for DC).
If the breaker is not connected as specified, its tripping characteristics and breaking performance will change, and it cannot be used.

●Current-limiting characteristic

The current limiting refers to reduction of estimated short-circuit current depending on the circuit to prevent flow of the larger short-circuit current. The use of a class S, H or R which has excellent current-limiting characteristic or class U enables to reduce the passing energy at short-circuiting and protect the devices in the electric circuit from electromagnetic force and thermal stress.

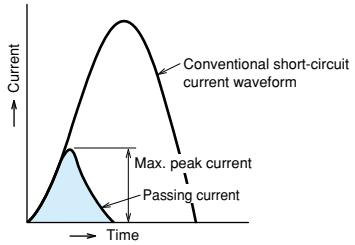

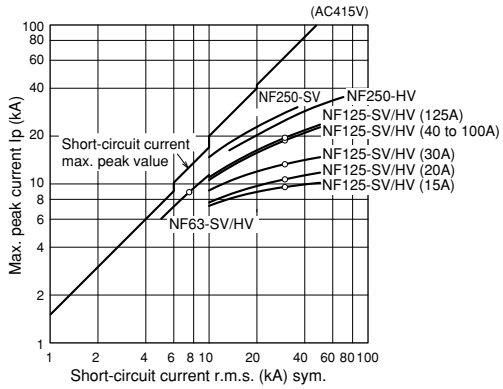

Fig. 4.13
Passing current peak value characteristic of classes S and H (415 VAC)

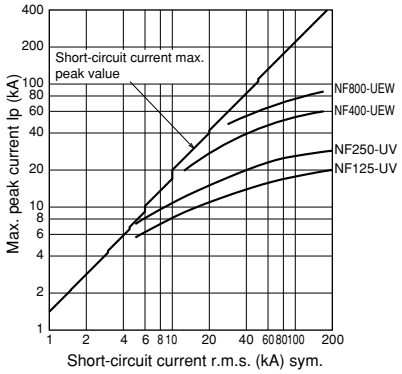

Fig. 4.14
Passing current peak value characteristic of classes U (415 VAC)

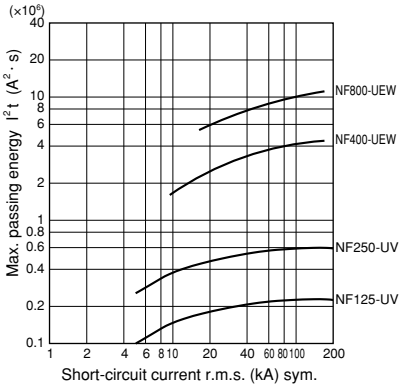

Fig. 4.15
Passing I²t characteristic of class U (415 VAC)

■Performance

●Short-circuit breaking performance

Short-circuit current corresponding to the rated interrupting capacity is interrupted.

●Outline of short-circuit test (IEC 60947-2)

①Rated limit short-circuit interrupting capacity (Icu)
Operating duty: O – 3 min – CO

②Rated service short-circuit interrupting capacity (Ics)
Operating duty: O – 3 min – CO – 3 min – CO
Upper limit of temperature rise of terminal after breaking: 80K or less
O duty: The circuit breaker in the ON status carries and interrupts short-circuit current.
CO duty: A shorted circuit is formed, and the circuit breaker is turned on to carry and interrupt short-circuit current.

●Opening/closing performance

Table 4-2 shows the durability against opening and closing. See the durability against opening and closing as reference when using a circuit breaker as a switchgear.
The durability against tripping by SHT (shunt tripping device), UVT (undervoltage tripping device) and trip button is 10% of the total durability against opening and closing.
Note: Opening and closing operations are regarded as one time.
If a circuit breaker is regularly used to trip, the life of the circuit breaker will be significantly reduced.

Table 4-2 Durability of MCCB against opening and closing (IEC 60947-2)

Rated current (A)	Frequency of opening and closing (times/hour)	Durability against opening and closing (times)		
		With current flow	Without current flow	Total
100 or less	120	1500	8500	10000
101 to 315	120	1000	7000	8000
316 to 630	60	1000	4000	5000
631 to 2500	20	500	2500	3000
2501 or more	10	500	1500	2000

3. Current-carrying Capacity and Operating Temperature

■Operating current vs. ambient temperature

Rated current of circuit breakers is adjusted for the rated ambient temperature. This is because circuit breakers are often installed in a casing as a switchboard or a control board, and temperature of the installed place of the breaker becomes higher than ambient temperature of the wires. If temperature of the installation site of circuit breakers greatly differ from the rated ambient temperature, it is necessary to correct rated current according to the temperature correction curve (shown in the Paragraph of characteristics and outside shape in the catalog). Load current can be increased up to the rated current corrected according to ambient temperature.
However, set current rating with enough allowance while taking fluctuation of power voltage and load current into consideration so that maximum operating current may not exceed the rated current.

(1) Cautionary instructions for using heat resistive wire

For using insulated wires of higher heat resistance than that of 600 V PVC insulated wire (allowable temperature 60°C), it is necessary to take the following points into consideration.
For circuit breakers, size of test wire is stipulated by each test current in IEC60947-1
If size of connection wire is thinner than the test wire size, temperature of the breaker terminals increases and overcurrent tripping operation characteristic may change in some cases. (Operating time becomes shorter usually.)
At motor load, for example, influence of change in operation characteristic by difference in size of connection wire is insignificant and can be disregarded because the load current is far lower than the rated current of the circuit breaker.

Table 4-3 Size of test wire

Range of test current (A)			Conductor size (mm^2)
0	<	≤ 8	1.0
8		12	1.5
12		15	2.5
15		20	2.5
20		25	4.0
25		32	6.0
32		50	10
50		65	16
65		85	25
85		100	35
100		115	35
115		130	50
130		115	50
150		175	70
175		200	95
200		225	95
225		250	120
250		275	150
275		300	185
300		350	185
350		400	240

(2) Connection of aluminum conductors

- When aluminum conductors are connected, be careful to prevent the contact resistance (due to the oxidized film of aluminum) from being increased.
- The surface of the connection point of the aluminum conductors shall be properly treated by plating (zinc displacement-Copper-Silver) or by joint compound. If the treatment is done only by joint compound, reliability is low, this should be limited to when plating is impossible (eg. at site).
- For aluminum cables, use compression terminals that are exclusively for aluminum cables.
- The compression portion of the terminal shall be provided with taping, and the aluminum wire shall not be exposed to the atmosphere.

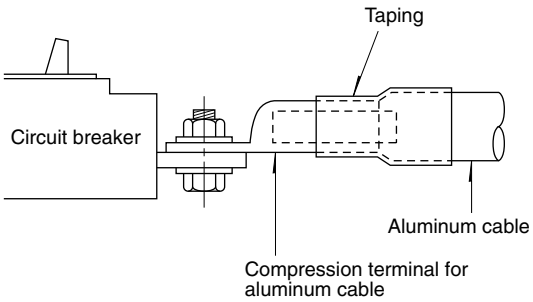

Fig. 4.16 Example of connection of aluminum conductor

(3) Maximum operating current of installation without clearance between breakers

In case of installation without clearance between breakers, because malfunction failures can result by heat of breaker, use the operating current not to exceed the below value.

Table 4-4

Model								Maximum operating current
BH	BH-P							80% of rated current
CP30-BA								
NF30-CS								
NF32-SV	NF63-CV			NV32-SV	NV63-CV			
NF63-SV	NF63-HV			NV63-SV	NV63-HV			
NF125-CV	NF125-SV	NF125-HV	NF125-UV	NV125-CV	NV125-SV	NV125-HV		
NF125-SXV	NF125-LXV	NF125-HXV						
NF125-SGV	NF125-LGV	NF125-HGV	NF125-RGV					
NF125-SEV		NF125-HEV						
NF160-SGV	NF160-LGV	NF160-HGV	NF160-RGV					
NF250-CV	NF250-SV	NF250-HV		NV250-CV	NV250-SV	NV250-HV		
NF250-SXV	NF250-LXV	NF250-HXV						
NF250-SGV	NF250-LGV	NF250-HGV	NF250-RGV					
NF250-SEV		NF250-HEV		NV250-SEV		NV250-HEV		
NF400-CW	NF400-SW	NF400-SEW	NF400-HEW	NV400-CW	NV400-SW	NV400-SEW	NV400-HEW	90% of rated current
NF400-REW	NF400-UEW			NV400-REW				
NF630-CW	NF630-SW	NF630-SEW	NF630-HEW	NV630-CW	NV630-SW	NV630-SEW	NV630-HEW	
NF630-REW								
NF800-CEW	NF800-SDW	NF800-SEW	NF800-HEW	NV800-SEW	NV800-HEW			
NF800-REW	NF800-UEW							

4. Application of Circuit Breaker According to Breaking Capacity

■MCCB (NF)

Class C, FAU Series / Classes S, H and R

(The correlation between transformers and interrupting capacities is intended for short-circuiting just under the secondary voltage of 3-phase standard transformer, 210 V or 420 V, or the voltage of single-phase 3-wire transformer, 210 V.)

Table 4-5 230VAC

3ph trans. capacity (kVA)	30 or less	50 to 75	100	150 to 300	500 to 1500	2000 to 3000
1ph trans. capacity (kVA)	20 or less	30 to 50	75	100 to 150	200 to 300	–

Breaking capacity (kA) (sym): 2.5, 5, 7.5, 10, 15, 25, 30, 35, 36, 50, 75, 85, 90, 100, 125, 150, 170, 200

Frame (A)																
30 • 32	NF30-CS NF30-FAU	NF32-SV														
50 • 60 • 63	NF50-FAU	NF63-CV	NF63-SV	NF63-HV												
100 • 125	NF125-CV				NF125-SV	NF125-HV			NF125-RGV	NF125-UV						
					NF125-SXV		NF125-LXV	NF125-HXV								
					NF125-SGV		NF125-LGV	NF125-HGV								
					NF125-SEV		NF125-HEV									
160	NF160-SGV						NF160-LGV	NF160-HGV								
225 • 250	NF250-CV				NF250-SV		NF250-HV		NF250-RGV	NF250-UV						
					NF250-SXV		NF250-LXV	NF250-HXV								
					NF250-SGV		NF250-LGV	NF250-HGV								
					NF250-SEV		NF250-HV									
400	NF400-CW					NF400-SW/SEW	NF400-HEW		NF400-REW	NF400-UEW						
600 • 630	NF630-CW					NF630-SW/SEW	NF630-HEW		NF630-REW							
800	NF800-CEW					NF800-SEW	NF800-HEW		NF800-REW	NF800-UEW						
1000 to 4000	NF1000-SEW to NF1600-SEW															

Table 4-6 440VAC

Trans. capacity (kVA)	30 or less	50 to 100	150 to 300	500 to 1000	1500 to 2000	2500 to 5000

Breaking capacity (kA) (sym): 1.5, 2.5, 7.5, 10, 15, 20, 25, 30, 35, 36, 50, 65, 85, 125, 200

Frame (A)															
30 • 32	NF30-CS	NF32-SV													
50 • 60 • 63	NF63-CV		NF63-SV	NF63-HV											
100 • 125	NF125-CV				NF125-SV	NF125-HV					NF125-RV NF125-RGV	NF125-UV			
					NF125-SXV		NF125-LXV	NF125-HXV							
					NF125-SGV		NF125-LGV	NF125-HGV							
					NF125-SEV		NF125-HEV								
160	NF160-SGV						NF160-LGV	NF160-HGV							
225 • 250	NF250-CV				NF250-SV		NF250-HV				NF250-RV NF250-RGV	NF250-UV			
					NF250-SXV		NF250-LXV	NF250-HXV							
					NF250-SGV		NF250-LGV	NF250-HGV							
					NF250-SEV		NF250-HEV								
400	NF400-CW					NF400-SW/SEW		NF400-HEW	NF400-REW	NF400-UEW					
600 • 630	NF630-CW						NF630-SE/SEW	NF630-HEW	NF630-REW						
800	NF800-CEW						NF800-SEW	NF800-HEW	NF800-REW	NF800-UEW					
1000 to 4000	NF1000-SEW to NF1600-SEW														

■ELCB (NV)

Class C, FAU Series / Classes S, H and R

(The correlation between transformers and interrupting current is intended for short-circuiting just under the secondary voltage of 3-phase standard transformer, 210 V or 420 V, or the voltage of single-phase 3-wire transformer, 210 V.)

Table 4-7 230VAC

3ph trans. capacity (kVA)	30 or less	50 to 75	100	150 to 300	500 to 1500	2000 to 3000
1ph trans. capacity (kVA)	20 or less	30 to 50	75	100 to 150	200 to 300	–

Breaking capacity (kA) (sym): 1.5, 2.5, 5, 7.5, 10, 15, 25, 30, 35, 36, 50, 85, 100, 125

Frame (A)												
30 • 32	NV30-FAU (*1)	NV32-SV										
50 • 60 • 63	NV50-FAU (*1)	NV63-CV	NV63-SV	NV63-HV								
100 • 125	NV125-CV				NV125-SV	NV125-HV						
					NV125-SEV		NV125-HEV					
225 • 250	NV250-CV				NV250-SV NV250-SEV		NV250-HV NV250-HEV					
400	NV400-CW					NV400-SW/SEW	NV400-HEW	NV400-REW				
600 • 630	NV630-CW					NV630-SW/SEW	NV630-HEW					
800	NV800-SEW						NV800-HEW					

*1 The interrupting current of NF30-FAU and NF50-FAU having a rated current of 5 A is 1.5 kA.

Table 4-8 440VAC

Trans. capacity (kVA)	30 or less	50 to 100	150 to 300	500 to 1000	1500 to 2000	2500 to 5000

Breaking capacity (kA) (sym): 2.5, 5, 7.5, 10, 15, 25, 30, 35, 36, 50, 65, 70, 85, 125

Frame (A)												
30 • 32	NV32-SV											
50 • 60 • 63	NV63-CV	NV63-SV	NV63-HV									
100 • 125	NV125-CV				NV125-HV							
					NV125-SV	NV125-SEV	NV125-HEV					
225 • 250	NV250-CV				NV250-SV NV250-SEV		NV250-HV NV250-HEV					
400	NV400-CW					NV400-SW/SEW		NV400-HEW	NV400-REW			
600 • 630	NV630-CW						NV630-SW/SEW	NV630-HEW				
800	NV800-SEW							NV800-HEW				

In some lighting apparatuses, the service life of circuit breakers may be reduced by the influence of inrush current applied when the lamps are turned on. Periodically check for abnormal temperature rise of the circuit breaker in such an apparatus.

5. Selection of Circuit Breaker for Electric Lamp or Heater Circuit

The maximum working current is 0.8 times the rated current of each circuit breaker.

■MCCB (NF)

Table 4-9 230VAC

Max. working current (A)	Rated current of circuit breaker (A)	Breaking capacity (kA) 230 V AC (Icu sym)																	
		2.5	5	7.5	10	15	25	30	36	50	75	85	90	100	125	150	170	200	
12	15	NF30-CS BH-P	BH-P (110/220V)	NF32-SV	NF63-SV	NF63-HV	NF125-SV NF125-SXV			NF125-HV NF125-SXV	NF125-HV NF125-SEV/SGV	NF125-HV NF125-LXV/LGV	NF125-HV NF125-HEV NF125-HXV/HGV	NF125-RGV	NF125-UV				
16	20																		
24	30																		
32	40	BH-P (110/220V)		NF63-CV															
40	50											NF125-HV NF125-HEV NF125-LXV/LGV							
48	60	NF125-CV						NF125-SV NF125-SEV NF125-SXV		NF125-HV NF125-SEV NF125-SXV									
60	75																		
80	100																		
100	125																		
120	150	NF250-CV								NF250-SV/SEV NF160-SGV		NF250-HV/HEV NF160-LGV	NF250-HV/HEV NF160-HGV	NF250-RGV	NF250-UV				
128	160																		
140	175									NF250-SV/SEV NF250-SXV/SGV		NF250-HV/HEV NF250-LXV/LGV	NF250-HV/HEV NF250-HXV/HGV						
160	200																		
180	225																		
200	250																		
240	300	NF400-CW									NF400-SW NF400-SEW	NF400-HEW		NF400-REW	NF400 -UEW				
280	350																		
320	400																		
400	500	NF630-CW									NF630-SE NF630-SEW	NF630-HEW		NF630-REW	NF800 -UEW				
480	600																		
560	700	NF800-CEW									NF800-SEW	NF800-HEW		NF800-REW					
640	800																		
800	1000	NF1000-SEW																	
960	1200	NF1250-SEW																	
1120	1400	NF1600-SEW																	
1280	1600																		

Table 4-10 440VAC

Max. working current (A)	Rated current of circuit breaker (A)	Breaking capacity (kA) 440 V AC (Icu sym)																	
		1.5	2.5	5	7.5	10	15	25	30	36	42	45	50	65	70	85	125	150	200
12	15	NF30-CS NF32-SV	NF32-SV	NF32-SV NF63-SV	NF63-SV	NF63-HV	NF125-SV NF125-SXV/SGV/SEV		NF125-HV NF125-SXV/SGV NF125-SEV	NF125-HV NF125-LXV/LGV			NF125-HXV NF125-HGV NF125-HEV NF125-RGV	NF125-HEV NF125-RGV		NF125-RGV	NF125-UV		
16	20																		
24	30																		
32	40	NF63-CV		NF63-CV NF63-SV						NF125-HV/HEV NF125-LXV/LGV									
40	50																		
48	60																		
60	75	NF125-CV																	
80	100																		
100	125						NF250-CV NF125-SXV/SGV NF125-SEV												
120	150	NF250-CV					NF250-CV NF160-SGV NF250-SEV	NF250-SV/SEV NF160-SGV		NF250-HV/HEV NF160-LGV			NF250-HV/HEV NF160-HGV	NF250-HV/HEV NF250-RGV		NF250-RGV	NF250-UV		
128	160																		
140	175						NF250-CV NF250-SXV/SGV NF250-SEV	NF250-SV/SEV NF250-SXV/SGV		NF250-HV/HEV NF250-LXV/LGV			NF250-HV/HEV NF250-HXV/HGV						
160	200																		
180	225																		
200	250																		
240	300	NF400-CW						NF400-CW NF400-SW/SEW		NF400-SW NF400-SEW	NF400-SW NF400-HEW	NF400-HEW		NF400-HEW NF400-REW		NF400-REW	NF400-UEW		
280	350																		
320	400										NF400-SEW/HEW								
400	500	NF630-CW								NF630-SW NF630-SEW	NF630-SW/SEW NF630-HEW		NF630-HEW	NF630-HEW NF630-REW		NF630-REW	NF800-UEW		
480	600																		
560	700	NF800-CEW								NF800-SEW	NF800-SEW NF800-HEW		NF800-HEW	NF800-HEW NF800-REW		NF800-REW			
640	800																		
800	1000	NF1000-SEW																	
960	1200	NF1250-CEW																	
1120	1400	NF1600-SEW																	
1280	1600																		

■ELCB (NV)

Table 4-11 230VAC

Max. working current (A)	Rated current (A)	Breaking capacity (kA) 230 V AC (Icu sym)											
		2.5	5	7.5	10	15	25	30	36	50	85	100	125
12	15	NV32-SV		NV32-SV		NV63-HV				NV125-HV			
16	20												
24	30												
32	40	NV63-CV		NV63-SV									
40	50									NV125-HV NV125-SEV		NV125-HV NV125-HEV	
48	60												
60	75	NV125-CV						NV125-SV					
80	100												
100	125												
120	150	NV250-CV							NV250-SV NV250-SEV			NV250-HV NV250-HEV	
140	175												
160	200												
180	225												
200	250												
240	300	NV400-CW								NV400-SW NV400-SEW		NV400-HEW	NV400-REW
280	350												
320	400												
400	500	NV630-CW								NV630-SW NV630-SEW		NV630-HEW	
480	600												
560	700	NV800-SEW										NV800-HEW	
640	800												

Table 4-12 440VAC

Max. working current (A)	Rated current (A)	Breaking capacity (kA) 440 V AC (Icu sym)											
		2.5	5	7.5	10	25	30	36	45	50	70	85	125
12	15	NV63-CV	NV32-SV	NV63-SV	NV63-HV		NV125-SV	NV125-HV					
16	20												
24	30												
32	40		NV63-CV										
40	50												
48	60		NV125-CV				NV125-SV NV125-SEV	NV125-HV NV125-SEV	NV125-HV NV125-HEV	NV125-HEV			
60	75												
80	100												
100	125												
120	150	NV250-CV					NV250-SV NV250-SEV		NV250-HV NV250-HEV				
140	175												
160	200												
180	225												
200	250												
240	300	NV400-CW							NV400-SW		NV400-HEW		NV400-REW
280	350												
320	400								NV400-SEW				
400	500	NV630-CW							NV630-SW NV630-SEW		NV630-HEW		
480	600												
560	700	NV800-SEW									NV800-HEW		
640	800												

6. Selection of Circuit Breaker for Motor Branch Circuit

(direct-to-line starting or Y-Δ starting)

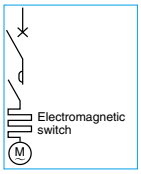

Motor is protected from overload by electromagnetic switch. Circuit breaker is installed to protect circuit from short-circuit.

■MCCB (NF)

Table 4-13 200/220VAC for 3-phase induction motor

	For 4-pole motor		Electromagnetic contactor		Breaking capacity (kA) 230 V AC (Icu sym)																					
					2.5		7.5		15		25		30(NF250-CV = 36)		50(NF125-SXV = 75)		85(NF125-LXV = 90)		100		150		200	
	Output (kW)	Full-load current (A)	Model	Heater nominal (A)	Model	Rating	Model	Rating	Model	Rating	Model	Rating	Model	Rating	Model	Rating	Model	Rating	Model	Rating	Model	Rating	Model	Rating
Direct-to-line starting	0.1	0.7	N10-N21	0.7	NF30-CS	(3)	NF32-SV	(3)	NF63-SV	(3)	NF63-HV	(10)			NF125-SV NF125-SXV	(15)	NF125-LXV	(15)	NF125-HV NF125-HXV	(15)			NF125-UV	(15)
	0.2	1.2		1.3																				
	0.4	2.1	N10-N21	2.1	NF30-CS	5	NF32-SV	5	NF63-SV	5	NF63-HV	(10)			NF125-SV NF125-SXV	(15)	NF125-LXV	(15)	NF125-HV NF125-HXV	(15)			NF125-UV	(15)
	0.75	3.7	N10-N21	3.6	NF30-CS	10	NF32-SV	10	NF63-SV	10	NF63-HV	10			NF125-SV NF125-SXV	(15)	NF125-LXV	(15)	NF125-HV NF125-HXV	(15)			NF125-UV	(15)
	1.5	6.4	N10-N25	6.6	NF30-CS	15	NF32-SV	15	NF63-SV	15	NF63-HV	15			NF125-SV NF125-SXV	(15)	NF125-LXV	(15)	NF125-HV NF125-HXV	15			NF125-UV	(15)
	2.2	9.7	N10-N35	9	NF30-CS	20	NF32-SV	20	NF63-SV	20	NF63-HV	20			NF125-SV NF125-SXV	20	NF125-LXV	20	NF125-HV NF125-HXV	20			NF125-UV	20
	3.7	15	N18-N35	15	NF30-CS	30	NF32-SV	30	NF63-SV	30	NF63-HV	30			NF125-SV NF125-SXV	30	NF125-LXV	30	NF125-HV NF125-HXV	30			NF125-UV	30
	5.5	22	N25·N35· N50·N65	22			NF63-CV	50	NF63-SV	50	NF63-HV	50			NF125-SV NF125-SXV	50	NF125-LXV	50	NF125-HV NF125-HXV	50			NF125-UV	50
	7.5	29	N35·N50-N80	29			NF63-CV	60	NF63-SV	60	NF63-HV	60			NF125-SV NF125-SXV	60	NF125-LXV	60	NF125-HV NF125-HXV	60			NF125-UV	60
	11	44	N50-N95	42									NF125-CV	75	NF125-SV NF125-SXV	75	NF125-LXV	75	NF125-HV NF125-HXV	75			NF125-UV	75
	15	55	N65-N125	54									NF125-CV	100	NF125-SV NF125-SXV	100	NF125-LXV	100	NF125-HV NF125-HXV	100			NF125-UV	100
Y-Δ starting	5.5	22	—	22			NF63-CV	50	NF63-SV	50	NF63-HV	50			NF125-SV NF125-SXV	50	NF125-LXV	50	NF125-HV NF125-HXV	50			NF125-UV	50
	7.5	29	—	29			NF63-CV	60	NF63-SV	60	NF63-HV	60	NF125-CV	60	NF125-SV NF125-SXV	60	NF125-LXV	60	NF125-HV NF125-HXV	60			NF125-UV	60
	11	44	—	42									NF125-CV	75	NF125-SV NF125-SXV	75	NF125-LXV	75	NF125-HV NF125-HXV	75			NF125-UV	75
	15	55	—	54									NF125-CV	100	NF125-SV NF125-SXV	100	NF125-LXV	100	NF125-HV NF125-HXV	100			NF125-UV	100
Direct-to-line starting	18.5	67	N80-N125	67									NF125-CV	100	NF125-SV NF125-SXV	100	NF125-LXV	125	NF125-HV NF125-HXV	125			NF125-UV	100
	22	85	N95-N150	82									NF250-CV	150			NF250-SV NF250-SXV	150	NF250-HV NF250-HXV	150			NF250-UV	150
	30	110	N125-N220	105									NF250-CV	175			NF250-SV NF250-SXV	175	NF250-HV NF250-HXV	175			NF250-UV	175
	37	130	N150-N220	125									NF250-CV	225			NF250-SV NF250-SXV	225	NF250-HV NF250-HXV	225			NF250-UV	225
	45	164	N180-N400	150											NF400-CW	350	NF400-SW	250	NF400-HEW	250	NF400-REW	250	NF400-UEW	250
	55	195	N220-N400	180											NF630-CW	500	NF400-SW	300	NF400-HEW	300	NF400-REW	300	NF400-UEW	300
	75	267	N300·N400·(N600)	250											NF630-CW	600	NF630-SW	500	NF400-HEW	400	NF400-REW	400	NF400-UEW	400
	90	320	N300·N400·(N600·N800)	330											NF800-CEW	600	NF630-SW	600	NF630-HEW	500	NF630-REW	500	NF800-UEW	500
	110	385	N300·N400·(N600·N800)	330											NF800-CEW	600	NF630-SEW	600	NF630-HEW	600	NF630-REW	600	NF800-UEW	600
	132	470	(N600·N800)	500																	NF1000-SEW	700		
	160	580	(N600·N800)	500																	NF1250-SEW	800		
	200	720	(N800)	600																	NF1600-SEW	1000		

Table 4-14 400/440VAC for 3-phase induction motor

	For 4-pole motor		Electromagnetic contactor		Breaking capacity (kA) 415 V AC (Icu sym)																					
					1.5		2.5		7.5		10		25		30		36		50(*1)		65		70		150(*2)		200	
	Output (kW)	Full-load current (A)	Model	Heater nominal (A)	Model	Rating	Model	Rating	Model	Rating	Model	Rating	Model	Rating	Model	Rating	Model	Rating	Model	Rating	Model	Rating	Model	Rating	Model	Rating	Model	Rating
Direct-to-line starting	0.2	0.6	N10-N21	0.7	NF30-CS	(3)	NF32-SV	(3)	NF63-SV	(3)	NF63-HV	10			NF125-SV	(15)	NF125-SXV	(15)	NF125-HV NF125-LXV	(15)	NF125-HXV	(15)					NF125-UV	(15)
	0.4	1.1	N10-N21	1.3	NF30-CS	(3)	NF32-SV	(3)	NF63-SV	(3)	NF63-HV	10			NF125-SV	(15)	NF125-SXV	(15)	NF125-HV NF125-LXV	(15)	NF125-HXV	(15)					NF125-UV	(15)
	0.75	1.9	N10-N21	1.7	NF30-CS	5	NF32-SV	5	NF63-SV	5	NF63-HV	10			NF125-SV	(15)	NF125-SXV	(15)	NF125-HV NF125-LXV	(15)	NF125-HXV	(15)					NF125-UV	(15)
	1.5	3.2	N10-N21	3.6	NF30-CS	10	NF32-SV	10	NF63-SV	10	NF63-HV	10			NF125-SV	(15)	NF125-SXV	(15)	NF125-HV NF125-LXV	(15)	NF125-HXV	(15)					NF125-UV	(15)
	2.2	4.6	N10-N21	5	NF30-CS	10	NF32-SV	10	NF63-SV	10	NF63-HV	10			NF125-SV	(15)	NF125-SXV	(15)	NF125-HV NF125-LXV	(15)	NF125-HXV	(15)					NF125-UV	(15)
	3.7	7.5	N11-N35	6.6	NF30-CS	20	NF32-SV	20	NF63-SV	20	NF63-HV	20			NF125-SV	20	NF125-SXV	20	NF125-HV NF125-LXV	20	NF125-HXV	20					NF125-UV	20
	5.5	11	N18-N35	11	NF30-CS	30	NF32-SV	30	NF63-SV	30	NF63-HV	30			NF125-SV	30	NF125-SXV	30	NF125-HV NF125-LXV	30	NF125-HXV	30					NF125-UV	30
	7.5	15	N20-N35 • N50	15	NF30-CS	30	NF32-SV	30	NF63-SV	30	NF63-HV	30			NF125-SV	30	NF125-SXV	30	NF125-HV NF125-LXV	30	NF125-HXV	30					NF125-UV	30
	11	22	N25 • N35 • N50 • N65	22		50	NF63-CV	50	NF63-SV	50	NF63-HV	50			NF125-SV	50	NF125-SXV	50	NF125-HV NF125-LXV	50	NF125-HXV	50					NF125-UV	50
	15	28	N35 • N50-N80	28			NF63-CV	60	NF63-SV	60	NF63-HV	60			NF125-SV	60	NF125-SXV	60	NF125-HV NF125-LXV	60	NF125-HXV	60					NF125-UV	60
	18.5	34	N50-N95	35			NF63-CV	60	NF63-SV	60	NF125-CV	60			NF125-SV	60	NF125-SXV	60	NF125-HV NF125-LXV	60	NF125-HXV	60					NF125-UV	60
	22	42	N50-N95	42							NF125-CV	75			NF125-SV	75	NF125-SXV	75	NF125-HV NF125-LXV	75	NF125-HXV	75					NF125-UV	75
	30	55	N65-N125	54							NF125-CV	100			NF125-SV	100	NF125-SXV	100	NF125-HV NF125-LXV	100	NF125-HXV	100					NF125-UV	100
	37	65	N80-N150	67							NF125-CV	100			NF125-SV	100	NF125-SXV	100	NF125-HV NF125-LXV	100	NF125-HXV	100					NF125-UV	100
	45	82	N80-N150	82									NF250-CV	125			NF250-SV NF250-SXV	125			NF250-HXV	125	NF250-HV	125			NF250-UV	125
Y-Δ starting	5.5	11	–	11			NF63-CV	30	NF63-SV	30	NF63-HV	30			NF125-SV	30	NF125-SXV	30	NF125-HV NF125-LXV	30	NF125-HXV	30					NF125-UV	30
	7.5	15	–	15			NF63-CV	40	NF63-SV	40	NF63-HV	40			NF125-SV	40	NF125-SXV	40	NF125-HV NF125-LXV	40	NF125-HXV	40					NF125-UV	40
	11	22	–	22			NF63-CV	50	NF63-SV	50	NF63-HV	50			NF125-SV	50	NF125-SXV	50	NF125-HV NF125-LXV	50	NF125-HXV	50					NF125-UV	50
	15	28	–	28			NF63-CV	60	NF63-SV	60	NF125-CV	60			NF125-SV	60	NF125-SXV	60	NF125-HV NF125-LXV	60	NF125-HXV	60					NF125-UV	60
	18.5	34	–	35			NF63-CV	60	NF63-SV	60	NF125-CV	60			NF125-SV	60	NF125-SXV	60	NF125-HV NF125-LXV	60	NF125-HXV	60					NF125-UV	60
	22	42	–	42							NF125-CV	75			NF125-SV	75	NF125-SXV	75	NF125-HV NF125-LXV	75	NF125-HXV	75					NF125-UV	75
	30	55	–	54							NF125-CV	100			NF125-SV	100	NF125-SXV	100	NF125-HV NF125-LXV	100	NF125-HXV	100					NF125-UV	100
	37	65	–	67							NF125-CV	100			NF125-SV	100	NF125-SXV	100	NF125-HV NF125-LXV	100	NF125-HXV	100					NF125-UV	100
	45	82	–	82									NF250-CV	150			NF250-SV NF250-SXV	150	NF250-LXV	150	NF250-HXV	150	NF250-HV	150			NF250-UV	150
Direct-to-line starting	55	96	N125-N220	105									NF250-CV	175			NF250-SV NF250-SXV	175	NF250-LXV	175	NF250-HXV	175	NF250-HV	175	NF400-REW	250	NF250-UV	175
	75	134	N150-N220	125									NF250-CV	225			NF250-SV NF250-SXV	225	NF250-LXV	225	NF250-HXV	225	NF250-HV	225	NF400-REW	300	NF250-UV	225
	90	160	N180-N400	150													NF250-SEV	225			NF250-HEV	225	NF400-REW	225	NF400-REW	400	NF400-UEW	225
	110	192	N180-N400	180															NF400-SW	350	NF400-HEW	300	NF400-REW	300	NF630-REW	500	NF400-UEW	300
	132	233	N220-N400	250															NF400-SW	400	NF400-HEW	400	NF400-REW	400	NF630-REW	600	NF400-UEW	400
	160	290	N300 • N400 • (N600)	250															NF630-SW	500	NF630-HEW	500	NF630-REW	500	NF1000-SEW	700	NF800-UEW	500
	200	360	N300 • N400 • (N600 • N800)	330															NF630-SW	600	NF630-HEW	600	NF630-REW	600	NF1250-SEW	800	NF800-UEW	600
	220	389	N300 • N400 • (N600 • N800)	–															NF630-SW	600	NF630-HEW	600	NF630-REW	600	NF1600-SEW	1000	NF800-UEW	600
	250	430	(N600 • N800)	500															NF630-SEW	700	NF630-HEW	600	NF630-REW	600			NF800-UEW	700
	300	500	(N600 • N800)	500															NF800-SEW	700	NF800-HEW	700	NF800-REW	700			NF800-UEW	700

Notes *1 The breaking capacity of NF400-SW is 45kA. *2 The breaking capacity of NF400- to 800-REW is 125kA.

Remarks:
1. Circuit breakers are selected under the starting conditions shown in the right table.
2. Protection coordination is examined under the condition of cold start at 40°C.
3. The ratings in parentheses apply to cases where thermal relays with saturating reactor are used.
4. Although the inrush current upon switching to Δ connection fluctuates depending on the residual magnetic flux at star starting, Δ connection closing phase or power supply transformer capacity, in most cases, the inrush current is less than the values shown in the right table.
5. The maximum starting current is the effective value of current (value after transient phenomena disappear) at the time when the rotator starts to rotate.
6. It was assumed that the Y-Δ starting would be performed by the open transition method which is a general method but is known to carry large transient inrush current.

Starting conditions for selection

Motor capacity	Direct-to-line starting time (600%)	Startup inrush current (x full-load current)	
		Direct-to-line starting	Y-Δ starting
0.2 to 7.5kW	10s	12 times	16 times
11 to 55	10	12	17
75 to 300	10	14	18

■ELCB (NV)

Table 4-15 200/220VAC for 3-phase induction motor

	For 4-pole motor		Electromagnetic contactor		Breaking capacity (kA) 230 V AC (Icu sym)																	
					2.5		7.5		15(*1)		25		30(*2)		50		85		100		150	
	Output (kW)	Full-load current (A)	Model	Heater nominal (A)	Model	Rating	Model	Rating	Model	Rating	Model	Rating	Model	Rating	Model	Rating	Model	Rating	Model	Rating	Model	Rating
Direct-to-line starting	0.1	0.7	N10-N21	0.7	NV30-CS	(5)	NV63-CV	(5)	NV32-SV	(15)	NV63-HV	(15)			NV125-SV	(15)			NV125-HV	(15)		
	0.2	1.2		1.3																		
	0.4	2.1	N10-N21	2.1	NV30-CS	5	NV63-CV	5	NV32-SV	(15)	NV63-HV	(15)			NV125-SV	(15)			NV125-HV	(15)		
	0.75	3.7	N10-N21	3.6	NV30-CS	10	NV63-CV	10	NV32-SV	(15)	NV63-HV	(15)			NV125-SV	(15)			NV125-HV	(15)		
	1.5	6.4	N10-N25	6.6	NV30-CS	15	NV63-CV	15	NV32-SV	15	NV63-HV	15			NV125-SV	15			NV125-HV	(15)		
	2.2	9.1	N10-N35	9	NV30-CS	20	NV63-CV	20	NV32-SV	20	NV63-HV	20			NV125-SV	20			NV125-HV	20		
	3.7	15	N18-N35	15	NV30-CS	30	NV63-CV	30	NV32-SV	30	NV63-HV	30			NV125-SV	30			NV125-HV	30		
	5.5	22	N25 • N35 • N50 • N65	22			NV63-CV	50	NV63-SV	50	NV63-HV	50			NV125-SV	50			NV125-HV	50		
	7.5	29	N35 • N50-N80	29			NV63-CV	60	NV63-SV	60	NV63-HV	60			NV125-SV	60			NV125-HV	60		
	11	44	N50-N95	42									NV125-CV	75	NV125-SV	75			NV125-HV	75		
	15	55	N65-N125	54									NV125-CV	100	NV125-SV	100			NV125-HV	100		
Y-Δ starting	5.5	22	–	22			NV63-CV	50	NV63-SV	50	NV63-HV	50			NV125-SV	50			NV125-HV	50		
	7.5	29	–	29			NV63-CV	60	NV63-SV	60	NV63-HV	60	NV125-CV	60	NV125-SV	60			NV125-HV	60		
	11	44	–	42									NV125-CV	75	NV125-SV	75			NV125-HV	75		
	15	55	–	54									NV125-CV	100	NV125-SV	100			NV125-HV	100		
Direct-to-line starting	18.5	67	N80-N125	67									NV125-CV	100	NV125-SV	100			NV125-HV	100		
	22	85	N95-N150	82									NV250-CV	150			NV250-SV	150	NV250-HV	150		
	30	110	N125-N220	105									NV250-CV	175			NV250-SV	175	NV250-HV	175		
	37	130	N150-N220	125									NV250-CV	225			NV250-SV	225	NV250-HV	225		
	45	164	N180-N400	150											NV400-CW	400	NV400-SW	300	NV400-HEW	250	NV400-REW	250
	55	195	N220-N400	180											NV630-CW	500	NV400-SW	300	NV400-HEW	300	NV400-REW	300
	75	267	N300 • N400 • (N600)	250											NV630-CW	600	NV400-SEW	400	NV400-HEW	400	NV400-REW	400
	90	320	N300 • N400 • (N600 • N800)	330													NV630-SEW	500	NV630-HEW	500		
	110	385	N300 • N400 • (N600 • N800)	330													NV630-SEW	600	NV630-HEW	600		

Notes *1 The breaking capacity of NV32-SV is 10kA. *2 The breaking capacity of NV250-CV is 36kA.

Table 4-16 400/440VAC for 3-phase induction motor

	For 4-pole motor		Electromagnetic contactor		Breaking capacity (kA) 415 V AC (Icu sym)																	
					2.5		5		7.5		10		25		30(*1)		50(*2)		70		125	
	Output (kW)	Full-load current (A)	Model	Heater nominal (A)	Model	Rating	Model	Rating	Model	Rating	Model	Rating	Model	Rating	Model	Rating	Model	Rating	Model	Rating	Model	Rating
Direct-to-line starting	0.2	0.6	N10-N21	0.7	NV63-CV	(5)	NV32-SV	(5)	NV63-SV	(5)	NV63-HV	(15)			NV125-SV	(15)	NV125-HV	(15)				
	0.4	1.1	N10-N21	1.3	NV63-CV	(5)	NV32-SV	(5)	NV63-SV	(5)	NV63-HV	(15)			NV125-SV	(15)	NV125-HV	(15)				
	0.75	1.9	N10-N21	1.7	NV63-CV	5	NV32-SV	5	NV63-SV	5	NV63-HV	(15)			NV125-SV	(15)	NV125-HV	(15)				
	1.5	3.2	N10-N21	3.6	NV63-CV	10	NV32-SV	10	NV63-SV	10	NV63-HV	(15)			NV125-SV	(15)	NV125-HV	(15)				
	2.2	4.6	N10-N21	5	NV63-CV	10	NV32-SV	10	NV63-SV	10	NV63-HV	(15)			NV125-SV	(15)	NV125-HV	(15)				
	3.7	7.5	N11-N35	6.6	NV63-CV	20	NV32-SV	20	NV63-SV	20	NV63-HV	20			NV125-SV	20	NV125-HV	20				
	5.5	11	N18-N35	11	NV63-CV	30	NV32-SV	30	NV63-SV	30	NV63-HV	30			NV125-SV	30	NV125-HV	30				
	7.5	15	N20-N35 • N50	15	NV63-CV	30	NV32-SV	30	NV63-SV	30	NV63-HV	30			NV125-SV	30	NV125-HV	30				
	11	22	N25 • N35 • N50 • N65	22	NV63-CV	50			NV63-SV	50	NV63-HV	50			NV125-SV	50	NV125-HV	50				
	15	28	N35 • N50-N80	28	NV63-CV	60			NV63-SV	60	NV63-HV	60			NV125-SV	60	NV125-HV	60				
	18.5	34	N50-N95	35							NV125-CV	60			NV125-SV	60	NV125-HV	60				
	22	42	N50-N95	42							NV125-CV	75			NV125-SV	75	NV125-HV	75				
	30	55	N65-N125	54							NV125-CV	100			NV125-SV	100	NV125-HV	100				
	37	65	N80-N150	67							NV125-CV	100			NV125-SV	100	NV125-HV	100				
	45	82	N95-N150	82									NV250-CV	125	NV250-SV	125			NV250-HV	125		
Y-Δ starting	5.5	11	–	11	NV63-CV	30	NV32-SV	30	NV63-SV	30	NV63-HV	30			NV125-SV	30	NV125-HV	30				
	7.5	15	–	15	NV63-CV	40			NV63-SV	40	NV63-HV	40			NV125-SV	40	NV125-HV	40				
	11	22	–	22	NV63-CV	50			NV63-SV	50	NV63-HV	50			NV125-SV	50	NV125-HV	50				
	15	28	–	28	NV63-CV	60			NV63-SV	60	NV125-CV	60			NV125-SV	60	NV125-HV	60				
	18.5	34	–	35							NV125-CV	60			NV125-SV	60	NV125-HV	60				
	22	42	–	42							NV125-CV	75			NV125-SV	75	NV125-HV	75				
	30	55	–	54							NV125-CV	100			NV125-SV	100	NV125-HV	100				
	37	65	–	67							NV125-CV	100			NV125-SV	100	NV125-HV	100				
	45	82	–	82									NV250-CV	150	NV250-SV	150			NV250-HV	150		
Direct-to-line starting	55	96	N125-N220	105									NV250-CV	175	NV250-SV	175			NV250-HV	175		
	75	134	N150-N220	125									NV250-CV	225	NV250-SV	225			NV250-HV	225		
	90	160	N180-N400	150											NV250-SEW	225		225	NV250-HEW	225	NV400-REW	225
	110	192	N180-N400	180													NV400-SW	350	NV400-HEW	300	NV400-REW	300
	132	233	N220-N400	250													NV400-SW	400	NV400-HEW	400	NV400-REW	400
	160	290	N300 • N400 • (N600)	250													NV630-SEW	500	NV630-HEW	500		
	200	360	N300 • N400 • (N600 • N800)	330													NV630-SEW	600	NV630-HEW	600		

Notes *1 The breaking capacity of NV250-SV and NV250-SEV is 36kA. *2 The breaking capacity of NV400-SW is 45kA.

Remark: 1. For the selecting conditions, please refer to the remarks on page 73.

Example of Y-Δ starting current waveform (crest value envelope)

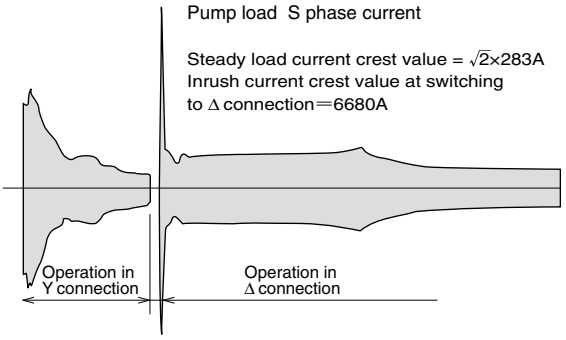

7. Selection of Motor Protection Breaker

■Motor Protection Breakers

In principle, the operating characteristic curve of a selected motor breaker must be lower than the heat characteristic of the motor. The following table shows the rated capacities of standard squired-cage 3-phase motors (4-pole) made by Mitsubishi Electric. The starting conditions are shown in the table.

Table 4-17 for 3-phase induction motor

Model	Motor Protection Breaker	NF32-SV	NF63-CV	NF63-SV	NF125-SV	NF250-SV	
Rated breaking capacity (kA)	230V	7.5	7.5	15	50	85	
	415V	2.5	2.5	7.5	30	36	
600% starting time limit (s)		2	32 A or less: 2 40 A or more: 7	32 A or less: 2 40 A or more: 7	32 A or less: 2 40 A or more: 7	5	
Startup inrush current limit (%)		1200	1200	1200	1200	1100	
Example of rated capacity of motor (kW)		Rated current	Rated current	Rated current	Rated current	Rated current	Model for combination with electromagnetic contactor
200/220V	400/440V						
	0.4						
0.2							
	0.75						
0.4							N10-N21
0.75	1.5	4	4	4			
	2.2	5	5	5			
1.5		7.1	7.1	7.1			
	3.7	8	8	8			
							N11-N35
2.2		10	10	10			
	5.5	12	12	12	(12.5)		N18-N35
							N20-N35
3.7	7.5	16	16	16	(16)		N50
							N25 • N35
							N50 • N65
5.5	11	25	25	25	(25)		
							N35
7.5	15	32	32	32	32		N50-N80
	18.5		40	40	(40)		N50-N95
11	22		45	45	45		
							N65-N125
15	30				63		
18.5	37				71		N80-N125
22	45				90		N90-N125
	55				100		
	55						N125-N220
30						125	
37	75					150	N150-N400
45	90					175	N180-N400
						200	N220-N400
55	110					225	

Remarks: 1. Fot the rated curent in parentheses, breakers will be manufactured to order.
2. The approximate values of inrush current at direct-to-line starting are shown below. Up to 7.5 kW: 1000% 11 kW or more: 1200% 75 kW or more: 1400%
When the starting current is large and the starting power factor is low, a combination with an electromagnetic switch selected in accordance with "Table of selection of circuit breaker for motor branch circuit" shown on page 73 is suitable.

Cautions

(1) Note that any circuit breaker operates when the startup inrush current, starting current and starting time exceed the conditions shown in the above table.
Particularly, high-efficiency motors generally have higher starting current and lower starting torque compared to general-purpose motors, and motor breakers cannot be used for such motors.
(2) Note that a circuit breaker may operate when an electromagnetic contactor is opened or closed while a motor is running.
(3) Select a motor breaker having rated current approx. 1.0 to 1.1 times higher than the full load current of motor.

8. Selection of Circuit Breaker for Inverter Circuit

Install MCCB or ELCB on the primary side (power supply side) of the inverter. If it is installed on the secondary side, it may cause electronic circuit trouble or overheating.

■Selection of Circuit Breaker for Inverter Circuit

Since current containing harmonic components will flow, the rated current of circuit breaker must be approx. 1.4 times the inverter input current.

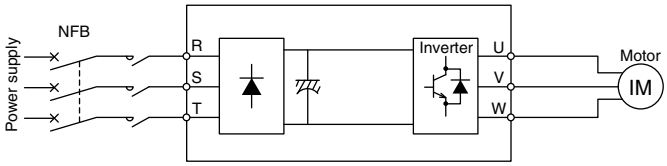

Note The life cycle of the circuit breaker for the circuit on the inverter primary side will be reduced under the influence of transient inrush current. Install a switch.

Table 4-18 3-phase 200 V class

Inverter input capacity kVA	Rated current of circuit breaker A	Inverter input capacity kVA	Rated current of circuit breaker A
5.5	30	41	175
9	40	52	225
12	50	66	300
17	75	80	350
20	100	100	500
28	125	110	500
34	150	132	600

■Selection of rated sensitivity current of Earth Leakage Circuit Breaker for Inverter Circuit

Select the rated sensitivity current as stated below.
Circuit breakers for harmonics and surge: Rated sensitivity current IΔn ≧ 10 × {Ig1 + Ign + Ig2 + Igm}
General circuit breakers: Rated sensitivity current IΔn ≧ 10 × {Ig1 + Ign + 3 × (Ig2 + Igm)}

Example 1

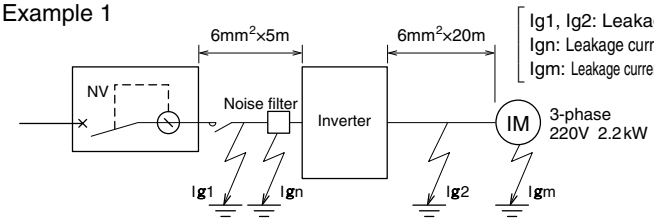

Ig1, Ig2: Leakage current from line
Ign: Leakage current from noise filter on inverter input side
Igm: Leakage current from motor operating on commercial power supply

Example 2

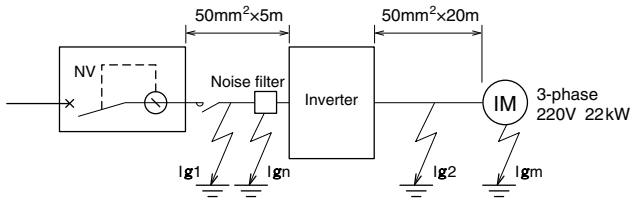

Table 4-19-1
Examples of leakage current from line when IV cable is wired in close contact with ground (wiring in metallic conduit) (3-phase 220V 60Hz)

Wire size mm²	Leakage current/km mA
6	135
10	140
16	169
25	176
35	203
50	205
70	241
95	247

Table 4-19-2
Example of leakage current from 3-phase induction motor (220V 60Hz)

Motor output (kW)	Leakage current (mA)
2.2	0.2
3.7	0.29
5.5	0.32
7.5	0.42
11	0.55
15	0.63
18.5	0.72
22	0.8
30	0.96
37	1.1

Example of selection 1

	Breaker for harmonics and surge	General breaker
Leakage current Ig1	$135 \times \frac{5}{1000} = 0.675$	$135 \times \frac{5}{1000} = 0.675$
Leakage current Ign	0 (without noise filter)	
Leakage current Ig2	$135 \times \frac{20}{1000} = 2.7$	$135 \times \frac{20}{1000} \times 3 = 8.1$
Leakage current Igm	0.18	0.18 × 3 = 0.54
Total leakage current Ig	3.555	11.465
Rated sensitivity current (> Ig × 10)	100	200

Example of selection 2

	Breaker for harmonics and surge	General breaker
Leakage current Ig1	$205 \times \frac{5}{1000} = 1.025$	$205 \times \frac{5}{1000} = 1.025$
Leakage current Ign	0 (without noise filter)	
Leakage current Ig2	$205 \times \frac{20}{1000} = 4.1$	$205 \times \frac{20}{1000} = 12.3$
Leakage current Igm	0.72	0.72 × 3 = 2.16
Total leakage current Ig	5.845	15.485
Rated sensitivity current (> Ig × 10)	100	500

Remarks:
1. Circuit breakers for harmonics and surge can detect earth fault on the secondary side of inverter only when the operating frequency is 120 Hz or less. In the case of star connection by neutral point grounding method, the sensitivity current for earth fault on the inverter secondary side is degraded. In this case, for protective ground for load device, apply Class C grounding (10 Ω or less).
2. For general circuit breakers, the leakage current from the line between inverter and motor shall be calculated as three times the leakage current at the commercial frequency in consideration of harmonic content.
3. For the model names of circuit breakers for harmonics and surge, refer to the specification list in Section 2 of this document. Models not for harmonics and surge are general breakers.

9. Selection of Circuit Breaker for Transformer Primary Side

Notes 1. The life cycle of the circuit breaker for the circuit on the transformer primary side will be significantly reduced under the influence of excited inrush current. Install a switch to open and close the circuit.

2. Select a circuit breaker based on the example of excited inrush current of each transformer. When using a circuit breaker for a transformer, check the magnitude of excited inrush current with the transformer manufacturer.

■Single-phase 210-V

Table 4-20-1 MCCB

Transformer capacity kVA	Rated primary current A	Example of transformer excited inrush current ①			Example of transformer excited inrush current ②			Example of transformer excited inrush current ③		
		Crest value of first wave (multiple)	Model	Rating A	Crest value of first wave (multiple)	Model	Rating A	Crest value of first wave (multiple)	Model	Rating A
5	23.8	45	NF125-CV(*1) NF125-CV, NF125-SV, NF125-HV NF125-SXV, NF125-HXV NF125-SEV, NF125-HEV	60 100 100 $63_{In=125}$	37	NF63-CV(*1) NF125-CV(*1) NF125-CV, NF125-SV NF125-SXV NF125-LXV, NF125-HXV NF125-SGV, NF125-HGV	50 60 75 75 80 $90_{In=125}$	24	NF63-CV(*1) NF63-CV, NF63-SV NF125-CV(*2) NF125-SV NF125-SXV NF125-LXV, NF125-HXV NF125-SGV, NF125-HGV	30 50 (50) 50 50 63 $56_{In=80}$
7.5	35.7	45	NF250-CV, NF250-SV, NF250-HV NF250-SXV, NF250-HXV NF250-SGV, NF250-HGV NF250-SEV, NF250-HEV	150 150 $175_{In=250}$ $80_{In=160}$	37	NF125-SEV NF125-CV(*1) NF250-CV, NF250-SV NF250-SXV, NF250-HXV NF250-SGV, NF250-HGV	$63_{In=125}$ 75 125 125 $140_{In=200}$	24	NF63-CV(*1) NF125-CV(*1)(*2) NF125-CV, NF125-SV NF125-SXV NF125-LXV, NF125-HXV NF125-SGV, NF125-HGV	50 60(50) 75 75 80 $90_{In=125}$
10	47.6	43	NF250-CV, NF250-SV, NF250-HV NF250-SXV, NF250-HXV NF250-SEV, NF250-HEV	200 200 $125_{In=250}$	37	NF125-CV(*1) NF250-CV, NF250-SV NF250-SXV, NF250-HXV NF250-SGV, NF250-HGV NF250-SEV	100 150 175 $175_{In=250}$ $80_{In=160}$	24	NF125-CV(*1) NF125-CV, NF125-SV NF125-SXV NF125-LXV, NF125-HXV	60 100 100 125
15	71.4	43	NF400-CW NF400-SW NF400-SEW, NF400-HEW	400 300 200	35	NF250-CV, NF250-SV NF250-SXV, NF250-HXV NF250-SEV	225 225 $125_{In=250}$	23	NF125-CV(*1) NF250-CV, NF250-SV NF250-SXV, NF250-HXV NF250-SGV, NF250-HGV	100 150 150 $175_{In=250}$
20	95.2	43	NF400-SW NF400-SEW, NF400-HEW	400 200	35	NF400-SW NF400-SEW	350 200	23	NF250-CV, NF250-SV NF250-SXV, NF250-HXV NF250-SEV	200 200 $125_{In=250}$
30	143	37	NF400-SEW, NF400-HEW NF630-SW	200 500	34	NF400-SEW	200	23	NF400-SW NF400-SEW	300 200
50	238	35	NF630-SEW(*1) NF1000-SEW	300 500	34	NF630-SEW	300	23	NF400-SEW(*1) NF630-SEW	300 300
75	357	30	NF800-SEW(*1) NF1250-SEW	400 600	29	NF800-SEW(*1)	400	22	NF630-SEW	400
100	476	27	NF1000-SEW, NF1600-SEW	800	28	NF1600-SEW	800	20	NF800-SEW(*1)	600
150	714	24	–	–	24	–	–	19	NF1600-SEW	800
200	952	21	–	–	22	–	–	19	–	–
300	1429	17	–	–	18	–	–	16	–	–
500	2381	–	–	–	17	–	–	–	–	–

Table 4-20-2 ELCB

Transformer capacity kVA	Rated primary current A	Example of transformer excited inrush current ①			Example of transformer excited inrush current ②			Example of transformer excited inrush current ③		
		Crest value of first wave (multiple)	Model	Rating A	Crest value of first wave (multiple)	Model	Rating A	Crest value of first wave (multiple)	Model	Rating A
5	23.8	45	NV125-CV, NV125-SV, NV125-HV NV125-SEV, NV125-HEV	100 50	37	NV125-CV, NV125-SV NV125-SEV	75 50	24	NV63-CV, NV63-SV NV125-CV NV125-SV NV125-SEV	50 60 50 50
7.5	35.7	45	NV250-CV, NV250-SV, NV250-HV NV250-SEV, NV250-HEV	150 125	37	NV125-SEV NV250-CV, NV250-SV	50 125	24	NV125-CV, NV125-SV NV125-SEV	75 50
10	47.6	43	NV250-CV, NV250-SV, NV250-HV NV250-SEV, NV250-HEV	200 125	37	NV250-CV, NV250-SV NV250-SEV	150 125	24	NV125-CV, NV125-SV NV250-CV, NV250-SV	100 125
15	71.4	43	NV400-CW NV400-SW NV400-SEW, NV400-HEW	400 300 200	35	NV250-CV, NV250-SV NV250-SEV	225 125	23	NV250-CV, NV250-SV NV250-SEV	150 125
20	95.2	43	NV400-SW NV400-SEW, NV400-HEW	400 200	35	NV400-SW NV400-SEW	350 200	23	NV250-CV, NV250-SV NV250-SEV	200 125
30	143	37	NV400-SEW, NV400-HEW NV630-SEW	200 300	34	NV400-SEW	200	23	NV400-SW NV400-SEW	300 200
50	238	35	–	–	34	NV630-SEW	300	23	NV630-SEW NV800-SEW	300 400
75	357	30	–	–	29	–	–	22	NV630-SEW	400
100	476	27	–	–	28	–	–	20	–	–
150	714	24	–	–	24	–	–	19	–	–
200	952	21	–	–	22	–	–	19	–	–
300	1429	17	–	–	18	–	–	16	–	–
500	2381	–	–	–	17	–	–	–	–	–

Notes *1 Examples of selection of high-instantaneous circuit breakers (special models) for primary side of transformer.
*2 The circuit breakers with rating in parentheses are special models.

Remarks: 1. For the circuit breakers whose rated current is adjustable, the rated current values are shown.
2. The crest value of the first wave of excited inrush current shall be calculated based on the multiple for the crest value of the first wave in the table, and the calculated value shall not exceed the lower limit crest value of instantaneous tripping current of circuit breaker. The circuit breakers are selected on condition that the transformer rated current value does not exceed 0.9 times the circuit breaker rated current. If the multiple for the crest value of the first wave is different from that shown in the table, a circuit breaker must be separately selected.

Single-phase 420-V

Table 4-21-1 MCCB

Transformer capacity kVA	Rated primary current A	Example of transformer excited inrush current ①			Example of transformer excited inrush current ②			Example of transformer excited inrush current ③		
		Crest value of first wave (multiple)	Model	Rating A	Crest value of first wave (multiple)	Model	Rating A	Crest value of first wave (multiple)	Model	Rating A
5	11.9	45	NF63-CV (*1) NF63-CV, NF63-SV, NF63-HV NF125-CV, NF125-SV, NF125-HV NF125-SXV, NF125-HXV NF125-SGV, NF125-HGV	30 50 50 50 $56_{In=80}$	37	NF32-SV NF63-CV, NF63-SV NF125-SV NF125-SXV, NF125-HXV NF125-SGV, NF125-HGV	15 15 15 15 16	24	NF32-SV, NF63-CV, NF63-SV NF125-SV NF125-SXV, NF125-HXV NF125-SGV, NF125-HGV	15 40 15 15 16
7.5	17.9	45	NF63-CV(*1) NF125-CV, NF125-SV, NF125-HV NF125-SXV, NF125-HXV NF125-SGV, NF125-HGV	50 75 75 $90_{In=125}$	37	NF63-CV(*1) NF63-CV, NF63-SV NF125-CV, NF125-SV NF125-SXV, NF125-HXV NF125-SGV, NF125-HGV	40 60 60 60 $56_{In=80}$	24	NF32-SV, NF63-CV, NF63-SV NF125-SV NF125-CV(*2) NF125-SXV, NF125-HXV NF125-SGV, NF125-HGV	30 30 (50) 30 25
10	23.8	43	NF125-CV(*1) NF125-CV, NF125-SV, NF125-HV NF125-SXV, NF125-HXV	60 100 100	37	NF63-CV(*1) NF125-CV, NF125-SV NF125-SXV NF125-LXV, NF125-HXV NF125-SGV, NF125-HGV	50 75 75 80 $90_{In=125}$	24	NF63-CV(*1) NF63-CV, NF63-SV NF125-CV(*2) NF125-SV NF125-SXV NF125-LXV, NF125-HXV NF125-SGV, NF125-HGV	30 50 (50) 50 50 60 $56_{In=80}$
15	35.7	43	NF125-CV(*1) NF250-CV, NF250-SV, NF250-HV NF250-SXV, NF250-HXV NF250-SGV, NF250-HGV NF250-SEV, NF250-HEV	100 150 150 $140_{In=200}$ $80_{In=160}$	35	NF125-CV(*1) NF125-CV, NF125-SV NF125-LXV, NF125-HXV	75 100 125	23	NF63-CV(*1) NF125-CV(*1)(*2) NF125-CV, NF125-SV NF125-SXV, NF125-HXV NF125-SGV, NF125-HGV	50 60(50) 75 75 $90_{In=125}$
20	47.6	43	NF250-CV, NF250-SV, NF250-HV NF250-SXV, NF250-HXV NF250-SEV, NF250-HEV	200 200 $125_{In=250}$	35	NF125-CV(*1) NF250-CV, NF250-SV NF250-SXV, NF250-HXV NF250-SGV, NF250-HGV NF250-SEV	100 150 150 $175_{In=250}$ $80_{In=160}$	23	NF125-CV(*1) NF125-CV, NF125-SV NF125-SXV, NF125-HXV	60 100 100
30	71.4	37	NF250-SEV, NF250-HEV NF400-CW NF400-SW	$125_{In=250}$ 350 250	34	NF250-CV, NF250-SV NF250-SXV, NF250-HXV NF250-SEV	225 225 $125_{In=250}$	23	NF125-CV(*1) NF250-CV, NF250-SV NF250-SXV, NF250-HXV	100 150 150
50	119	35	NF400-SW NF400-SEW, NF400-HEW	400 200	34	NF400-SW NF400-SEW	400 200	23	NF250-SEV	$150_{In=250}$
75	179	30	NF400-SEW, NF400-HEW NF630-SW NF630-SEW, NF630-HEW	200 500 300	29	NF400-SEW	200	22	NF400-SW NF400-SEW	400 200
100	238	27	NF400-SEW(*1) NF630-SW NF630-SEW, NF630-HEW	300 600 300	28	NF400-SEW(*1) NF630-SEW	300 300	20	NF400-SEW	350
150	357	24	NF630-SEW(*1)	400	24	–	–	19	NF400-SEW(*1) NF630-SEW	400 400
200	476	21	NF800-SEW(*1)	600	22	NF800-SEW(*1)	600	19	NF800-SEW(*1)	600
300	714	17	NF1250-SEW	800	18	NF1600-SEW	800	16	NF1250-SEW	800
500	1190	–	–	–	17	–	–	–	–	–

Table 4-21-2 ELCB

Transformer capacity kVA	Rated primary current A	Example of transformer excited inrush current ①			Example of transformer excited inrush current ②			Example of transformer excited inrush current ③		
		Peak value of first wave (multiple)	Model	Rating A	Peak value of first wave (multiple)	Model	Rating A	Peak value of first wave (multiple)	Model	Rating A
5	11.9	45	NV63-CV, NV63-SV, NV63-HV NV125-CV NV125-SV, NV125-HV	50 60 50	37	NV32-SV NV63-CV, NV63-SV NV125-SV	15 15 15	24	NV32-SV NV63-CV, NV63-SV NV125-SV	15 15 15
7.5	17.9	45	NV125-CV, NV125-SV, NV125-HV	75	37	NV63-CV, NV63-SV NV125-CV, NV125-SV	60 60	24	NV32-SV NV63-CV, NV63-SV NV125-SV	30 30 30
10	23.8	43	NV125-CV, NV125-SV, NV125-HV NV125-SEV, NV125-HEV	100 50	37	NV125-CV, NV125-SV NV125-SEV	75 50	24	NV63-CV, NV63-SV NV125-CV NV125-SV	50 60 50
15	35.7	43	NV250-CV, NV250-SV, NV250-HV NV250-SEV, NV250-HEV	150 125	35	NV125-CV, NV125-SV NV125-SEV	100 50	23	NV125-CV, NF125-SV NV125-SEV	75 50
20	47.6	43	NV250-CV, NV250-SV, NV250-HV NV250-SEV, NV250-HEV	200 125	35	NV250-CV, NV250-SV NV250-SEV	150 125	23	NV125-CV, NF125-SV NV125-SEV	100 60
30	71.4	37	NV250-SEV, NV250-HEV NV400-CW NV400-SW	125 350 250	34	NV250-CV, NV250-SV NV250-SEV	225 125	23	NV250-SV, NV250-SV NV250-SEV	150 125
50	119	35	NV400-SW NV400-SEW, NV400-HEW	400 200	34	NV400-SW NV400-SEW	400 200	23	NV250-SEV	150
75	179	30	NV400-SEW, NV400-HEW NV630-SEW, NV630-HEW	200 300	29	NV400-SEW	200	22	NV400-SW NV400-SEW	400 200
100	238	27	NV630-SEW, NV630-HEW NV800-SEW, NV800-HEW	300 400	28	NV630-SEW NV800-SEW	300 400	20	NV400-SEW	350
150	357	24	–	–	24	–	–	19	NV630-SEW NV800-SEW	400 400
200	476	21	–	–	22	–	–	19	–	–
300	714	17	–	–	18	–	–	16	–	–
500	1190	–	–	–	–	–	–	–	–	–

Notes *1 Examples of selection of high-instantaneous circuit breakers (special models) for primary side of transformer.
*2 The circuit breakers with rating in parentheses are special models.

Remarks: 1. For the circuit breakers whose rated current is adjustable, the rated current values are shown.
2. The peak value of the first wave of excited inrush current shall be calculated based on the multiple for the peak value of the first wave in the table, and the calculated value shall not exceed the lower limit peak value of instantaneous tripping current of circuit breaker. The circuit breakers are selected on condition that the transformer rated current value does not exceed 0.9 times the circuit breaker rated current. If the multiple for the peak value of the first wave is different from that shown in the table, a circuit breaker must be separately selected.

■3-phase 210-V

Table 4-21-3 MCCB

Transformer capacity kVA	Rated primary current A	Example of transformer excited inrush current ①			Example of transformer excited inrush current ②			Example of transformer excited inrush current ③		
		Crest value of first wave (multiple)	Model	Rating A	Crest value of first wave (multiple)	Model	Rating A	Crest value of first wave (multiple)	Model	Rating A
5	13.7	25	NF32-SV NF63-CV, NF63-SV, NF63-HV NF125-SV, NF125-HV NF125-SXV, NF125-HXV NF125-SGV, NF125-HGV	20 20 20 20 20	26	NF32-SV, NF63-CV, NF63-SV NF125-SV NF125-SXV, NF125-HXV NF125-SGV, NF125-HGV	20 20 20 20	18	NF32-SV, NF63-CV, NF63-SV NF125-SV NF125-SXV, NF125-HXV NF125-SGV, NF125-HGV	20 20 20 20
7.5	20.6	25	NF63-CV(*1) NF63-CV, NF63-SV, NF63-HV NF125-CV(*2) NF125-SV, NF125-HV NF125-SXV, NF125-HXV NF125-SGV, NF125-HGV	30 50 (50) 50 50 $56_{In=80}$	26	NF63-CV(*1) NF63-CV, NF63-SV NF125-CV, NF125-SV NF125-SXV, NF125-HXV NF125-SGV, NF125-HGV	30 50 50 50 $56_{In=80}$	18	NF32-SV, NF63-CV, NF63-SV NF125-CV(*2) NF125-SV NF125-SXV, NF125-HXV NF125-SGV, NF125-HGV	30 (50) 30 30 25
10	27.5	24	NF63-CV(*1) NF63-CV, NF63-SV, NF63-HV NF125-CV(*1) NF125-CV, NF125-SV, NF125-HV NF125-SXV, NF125-HXV NF125-SGV, NF125-HGV	40 60 50 60 60 $70_{In=100}$	26	NF63-CV(*1) NF63-CV, NF63-SV NF125-CV, NF125-SV NF125-SXV NF125-LXV, NF125-HXV NF125-SGV, NF125-HGV	40 60 60 60 75 $70_{In=100}$	18	NF63-CV, NF63-SV NF125-CV(*2) NF125-SV NF125-SXV, NF125-HXV NF125-SGV, NF125-HGV	50 (50) 50 50 $45_{In=63}$
15	41.2	24	NF63-CV(*1) NF125-CV, NF125-SV, NF125-HV NF125-SXV, NF125-HXV NF125-SGV, NF125-HGV	50 100 100 $90_{In=125}$	26	NF125-CV(*1) NF125-CV, NF125-SV NF125-SXV, NF125-HXV	60 100 100	18	NF63-CV(*1) NF63-CV, NF63-SV NF125-CV, NF125-SV NF125-SXV NF125-LXV, NF125-HXV NF125-SGV, NF125-HGV	50 63 63 63 75 $70_{In=100}$
20	55.0	20	NF125-CV(*1) NF125-CV, NF125-SV, NF125-HV NF125-SXV, NF125-HXV	75 100 100	26	NF125-CV(*1) NF125-SEV NF250-CV, NF250-SV NF250-CV NF250-SXV, NF250-HXV NF250-SGV, NF250-HGV	75 75 125 150 150 $140_{In=200}$	18	NF125-CV(*1) NF125-CV, NF125-SV NF125-SXV, NF125-HXV NF125-SGV, NF125-HGV	75 100 100 $90_{In=125}$
30	82.5	20	NF125-CV(*1) NF250-CV, NF250-SV, NF250-HV NF250-SXV, NF250-HXV NF250-SGV, NF250-HGV NF250-SEV, NF250-HEV	100 150 150 $175_{In=250}$ $100_{In=160}$	26	NF250-CV, NF250-SV NF250-SXV, NF250-HXV NF250-SEV	200 200 $125_{In=250}$	18	NF125-CV(*1) NF250-CV, NF250-SV NF250-SXV, NF250-HXV NF250-SGV, NF250-HGV	100 150 150 $140_{In=200}$
50	137	20	NF250-SEV, NF250-HEV NF400-CW NF400-SW	$175_{In=250}$ 350 250	23	NF400-CW NF400-SW NF400-SEW	400 300 200	16	NF250-CV, NF250-SV NF250-SXV, NF250-HXV NF250-SEV	200 200 $175_{In=200}$
75	206	21	NF400-SW NF400-SEW, NF400-HEW	400 250	18	NF400-SW NF400-SEW	350 250	14	NF400-SW NF400-SEW	300 250
100	275	21	NF400-SEW(*1) NF630-SW NF630-SEW, NF630-HEW	350 600 350	17	NF400-SEW	350	13	NF400-SW NF400-SEW	350 300
150	412	17	NF630-SEW, NF630-HEW	500	14	NF630-SEW	500	13	NF630-SW NF630-SEW	500 500
200	550	16	NF800-SEW(*1)	700	13	NF800-SEW	700	12	NF800-SEW	700
300	825	16	NF1600-SEW	1000	13	NF1250-SEW	1000	12	NF1000-SEW	1000
500	1375	–	–	–	11	NF1600-SEW	1600	11	NF1600-SEW	1600

Table 4-21-4 ELCB

Transformer capacity kVA	Rated primary current A	Example of transformer excited inrush current ①			Example of transformer excited inrush current ②			Example of transformer excited inrush current ③		
		Peak value of first wave (multiple)	Model	Rating A	Peak value of first wave (multiple)	Model	Rating A	Peak value of first wave (multiple)	Model	Rating A
5	13.7	25	NV32-SV NV63-CV, NV63-SV, NV63-HV NV125-SV, NV125-HV	20 20 20	26	NV32-SV NV63-CV, NV63-SV NV125-SV	20 20 20	18	NV32-SV NV63-CV, NV63-SV NV125-SV	20 20 20
7.5	20.6	25	NV63-CV, NV63-SV, NV63-HV NV125-CV NV125-SV, NV125-HV	50 60 50	26	NV63-CV, NV63-SV NV125-CV NV125-SV	50 60 50	18	NV32-SV NV63-CV, NV63-SV NV125-SV	30 30 30
10	27.5	24	NV63-CV, NV63-SV, NV63-HV NV125-CV, NV125-SV, NV125-HV	60 60	26	NV63-CV, NV63-SV NV125-CV, NV125-SV	60 60	18	NV63-CV, NV63-SV NV125-CV NV125-SV	50 60 50
15	41.2	24	NV125-CV, NV125-SV, NV125-HV NV125-SEV, NV125-HEV	100 50	26	NV125-CV, NV125-SV NV125-SEV	100 50	18	NV63-CV, NV63-SV NV125-CV, NV125-SV	60 60
20	55.0	20	NV125-CV, NV125-SV, NV125-HV NV125-SEV, NV125-HEV	100 75	26	NV125-SEV NV250-CV, NV250-SV	75 125	18	NV125-CV, NV125-SV NV125-SEV	100 75
30	82.5	20	NV250-CV, NV250-SV, NV250-HV NV250-SEV, NV250-HEV	150 125	26	NV250-CV, NV250-SV NV250-SEV	200 125	18	NV250-CV, NV250-SV NV125-SEV	150 125
50	137	20	NV250-SEV, NV250-HEV NV400-CW NV400-SW	175 350 250	23	NV400-CW NV400-SW NV400-SEW	400 300 200	16	NV250-CV, NV250-SV NV250-SEV	200 175
75	206	21	NV400-SW NV400-SEW, NV400-HEW	400 250	18	NV400-SEW NV400-SW	250 350	14	NV400-SW NV400-SEW	300 250
100	275	21	NV630-SEW, NV630-HEW NV800-SEW, NV800-HEW	350 400	17	NV400-SEW	350	13	NV400-SW NV400-SEW	350 300
150	412	17	NV630-SEW, NV630-HEW	500	14	NV630-SEW NV800-SEW	500 500	13	NV630-SEW NV800-SEW	500 500
200	550	16	–	–	13	–	–	12	NV800-SEW	700
300	825	16	–	–	13	–	–	12	–	–
500	1375	–	–	–	11	–	–	11	–	–

Notes *1 Examples of selection of high-instantaneous circuit breakers (special models) for primary side of transformer.
*2 The circuit breakers with rating in parentheses are special models.

Remarks: 1. For the circuit breakers whose rated current is adjustable, the rated current values are shown.
2. The peak value of the first wave of excited inrush current shall be calculated based on the multiple for the peak value of the first wave in the table, and the calculated value shall not exceed the lower limit peak value of instantaneous tripping current of circuit breaker. The circuit breakers are selected on condition that the transformer rated current value does not exceed 0.9 times the circuit breaker rated current. If the multiple for the peak value of the first wave is different from that shown in the table, a circuit breaker must be separately selected.

■3-phase 420-V

Table 4-21-5 MCCB

Transformer capacity kVA	Rated primary current A	Example of transformer excited inrush current ①			Example of transformer excited inrush current ②			Example of transformer excited inrush current ③		
		Crest value of first wave (multiple)	Model	Rating A	Crest value of first wave (multiple)	Model	Rating A	Crest value of first wave (multiple)	Model	Rating A
5	6.9	32	NF32-SV NF63-CV, NF63-SV, NF63-HV NF125-SV, NF125-HV NF125-SXV, NF125-HXV NF125-SGV, NF125-HGV	10 10 15 15 16	26	NF30-CS NF32-SV, NF63-CV, NF63-SV	30 10	18	NF32-SV, NF63-CV, NF63-SV NF125-SV NF125-SXV, NF125-HXV NF125-SGV, NF125-HGV	10 15 15 16
7.5	10.3	32	NF32-SV NF63-CV, NF63-SV, NF63-HV NF125-SV, NF125-HV NF125-SXV, NF125-HXV NF125-SGV, NF125-HGV	15 15 15 15 16	26	NF32-SV, NF63-CV, NF63-SV NF125-SV NF125-SXV, NF125-HXV NF125-SGV, NF125-HGV	15 15 15 16	18	NF32-SV, NF63-CV, NF63-SV NF125-SV NF125-SXV, NF125-HXV NF125-SGV, NF125-HGV	15 15 15 16
10	13.7	31	NF32-SV NF63-CV, NF63-SV, NF63-HV NF125-CV(*2) NF125-SV, NF125-HV NF125-SXV, NF125-HXV NF125-SGV, NF125-HGV	20 20 (50) 20 20 20	26	NF32-SV NF63-CV, NF63-SV NF125-SV NF125-SXV, NF125-HXV NF125-SGV, NF125-HGV	20 20 20 20 20	18	NF32-SV NF63-CV, NF63-SV NF125-SV NF125-SXV, NF125-HXV NF125-SGV, NF125-HGV	20 20 20 20 20
15	20.6	31	NF63-CV(*1) NF63-CV, NF63-SV, NF63-HV NF125-CV, NF125-SV, NF125-HV NF125-SXV, NF125-HXV NF125-SGV, NF125-HGV NF125-SEV, NF125-HEV	40 60 60 60 $56_{In=80}$ $32_{In=63}$	26	NF63-CV(*1) NF63-CV, NF63-SV NF125-CV, NF125-SV NF125-SXV, NF125-HXV NF125-SGV, NF125-HGV	30 50 50 50 $56_{In=80}$	18	NF32-SV, NF63-CV, NF63-SV NF125-CV(*2) NF125-SV NF125-SXV, NF125-HXV NF125-SGV, NF125-HGV	30 (50) 30 30 25
20	27.5	26	NF63-CV(*1) NF63-CV, NF63-SV, NF63-HV NF125-CV(*1) NF125-CV, NF125-SV, NF125-HV NF125-SXV NF125-LXV, NF125-HXV NF125-SGV, NF125-HGV	40 60 50 60 60 75 $70_{In=100}$	26	NF63-CV(*1) NF63-CV, NF63-SV NF125-CV, NF125-SV NF125-SXV, NF125-LXV, NF125-HXV NF125-SGV, NF125-HGV	40 60 60 60 75 $70_{In=100}$	18	NF63-CV(*1) NF63-CV, NF63-SV NF125-CV, NF125-SV NF125-SXV, NF125-HXV NF125-SGV, NF125-HGV	40 50 50 50 $45_{In=63}$
30	41.2	24	NF63-CV(*1) NF125-CV(*1) NF125-CV, NF125-SV, NF125-HV NF125-SXV, NF125-HXV NF125-SGV, NF125-HGV	50 50 100 100 $90_{In=125}$	26	NF125-CV(*1) NF125-CV, NF125-SV NF125-SXV, NF125-HXV	60 100 100	18	NF63-CV(*1) NF125-CV, NF125-SV NF125-SXV NF125-LXV, NF125-HXV NF125-SGV, NF125-HGV	50 75 63 75 $70_{In=100}$
50	68.7	22	NF125-CV(*1) NF250-CV, NF250-SV, NF250-HV NF250-SXV, NF250-HXV NF250-SGV, NF250-HGV NF250-SEV, NF250-HEV	100 150 150 $140_{In=200}$ $80_{In=160}$	23	NF125-CV(*1) NF250-CV, NF250-SV NF250-SXV, NF250-HXV NF250-SGV, NF250-HGV	100 150 150 $140_{In=200}$	16	NF125-CV, NF125-SV NF125-SXV, NF125-HXV	100 100
75	103	15	NF250-CV, NF250-SV, NF250-HV NF250-SXV, NF250-HXV NF250-SGV, NF250-HGV NF250-SEV, NF250-HEV	150 150 $140_{In=200}$ $125_{In=160}$	18	NF250-CV, NF250-SV NF250-SXV, NF250-HXV NF250-SGV, NF250-HGV NF250-SEV	175 175 $175_{In=250}$ $125_{In=160}$	14	NF250-CV, NF250-SV NF250-SXV, NF250-HXV NF250-SGV, NF250-HGV	150 150 $140_{In=200}$
100	137	15	NF250-CV, NF250-SV, NF250-HV NF250-SXV, NF250-HXV NF250-SEV, NF250-HEV	200 200 $175_{In=250}$	17	NF250-CV, NF250-SV NF250-SXV, NF250-HXV NF250-SEV	225 225 $175_{In=250}$	13	NF250-CV, NF250-SV NF250-SXV, NF250-HXV NF250-SGV, NF250-HGV	175 175 $175_{In=250}$
150	206	15	NF400-CW NF400-SW NF400-SEW, NF400-HEW	400 300 250	14	NF400-SW NF400-SEW	300 250	13	NF400-CW NF400-SW NF400-SEW	400 250 250
200	275	14	NF400-SW NF400-SEW, NF400-HEW	350 350	13	NF400-SW/SEW	350/350	12	NF400-SW NF400-SEW	350 350
300	412	10	NF630-CW NF630-SW NF630-SEW, NF630-HEW	600 500 500	13	NF630-SEW	500	12	NF630-SW NF630-SEW	500 500
500	687	15	NF800-SEW(*1) NF1250-SEW	800 800	11	NF800-SEW	800	11	NF800-SEW	800

Table 4-21-6 ELCB

Transformer capacity kVA	Rated primary current A	Example of transformer excited inrush current ①			Example of transformer excited inrush current ②			Example of transformer excited inrush current ③		
		Peak value of first wave (multiple)	Model	Rating A	Peak value of first wave (multiple)	Model	Rating A	Peak value of first wave (multiple)	Model	Rating A
5	6.9	32	NV32-SV(*1) NV63-CV, NV63-SV(*1) NV63-HV NV125-SV, NV125-HV	15(10) 15(10) 15 15	26	NV32-SV(*1) NV63-CV, NV63-SV(*1) NV125-SV	15(10) 15(10) 15	18	NV32-SV(*1) NV63-CV, NV63-SV(*1) NV125-SV	15(10) 15(10) 15
7.5	10.3	32	NV32-SV NV63-CV, NV63-SV, NV63-HV NV125-SV, NV125-HV	15 15 15	26	NV32-SV NV63-CV, NV63-SV NV125-SV	15 15 15	18	NV32-SV NV63-CV, NV63-SV NV125-SV	15 15 15
10	13.7	31	NV32-SV NV63-CV, NV63-SV, NV63-HV NV125-CV NV125-SV, NV125-HV	20 20 50 20	26	NV32-SV NV63-CV, NV63-SV NV125-SV	20 20 20	18	NV32-SV NV63-CV, NV63-SV NV125-SV	20 20 20
15	20.6	31	NV63-CV, NV63-SV, NV63-HV NV125-CV, NV125-SV, NV125-HV NV125-SEV, NV125-HEV	60 60 50	26	NV63-CV, NV63-SV NV125-CV NV125-SV	50 60 50	18	NV32-SV NV63-CV, NV63-SV NV125-SV	30 30 30
20	27.5	26	NV63-CV, NV63-SV, NV63-HV NV125-CV, NV125-SV, NV125-HV	60 60	26	NV63-CV, NV63-SV NV125-CV, NV125-SV	60 60	18	NV63-CV, NV63-SV NV125-CV NV125-SV	50 60 50
30	41.2	24	NV125-CV, NV125-SV, NV125-HV NV125-SEV, NV125-HEV	100 50	26	NV125-CV, NV125-SV NV125-SEV	100 50	18	NV125-CV, NV125-SV	75
50	68.7	22	NV250-CV, NV250-SV, NV250-HV NV250-SEV, NV250-HEV	150 125	23	NV250-CV, NV250-SV NV250-SEV	150 125	16	NV125-CV, NV125-SV	100
75	103	15	NV250-CV, NV250-SV, NV250-HV NV250-SEV, NV250-HEV	150 125	18	NV250-CV, NV250-SV NV250-SEV	175 125	14	NV250-CV, NV250-SV	150
100	137	15	NV250-CV, NV250-SV, NV250-HV NV250-SEV, NV250-HEV	200 175	17	NV250-CV, NV250-SV NV250-SEV	200 175	13	NV250-CV, NV250-SV	175
150	206	15	NV400-CW NV400-SW NV400-SEW, NV400-HEW	400 300 250	14	NV400-SW NV400-SEW	300 250	13	NV400-CW NV400-SW NV400-SEW	400 250 250
200	275	14	NV400-SW NV400-SEW, NV400-HEW	350 350	13	NV400-SW NV400-SEW	350 350	12	NV400-SW NV400-SEW	350 350
300	412	10	NV630-CW, NV630-SW NV630-SEW, NV630-HEW	600 500	13	NV630-SEW NV800-SEW	500 500	12	NV630-SEW	500
500	687	15	–	–	11	–	–	11	–	–

Notes *1 Examples of selection of high-instantaneous circuit breakers (special models) for primary side of transformer.
*2 The circuit breakers with rating in parentheses are special models.

Remarks: 1. For the circuit breakers whose rated current is adjustable, the rated current values are shown.
2. The peak value of the first wave of excited inrush current shall be calculated based on the multiple for the peak value of the first wave in the table, and the calculated value shall not exceed the lower limit peak value of instantaneous tripping current of circuit breaker. The circuit breakers are selected on condition that the transformer rated current value does not exceed 0.9 times the circuit breaker rated current. If the multiple for the peak value of the first wave is different from that shown in the table, a circuit breaker must be separately selected.

10. Combination for Selective Breaking

Combinations of main circuit breaker for coordination and branch circuit breakers capable of selective breaking and the breaking capacity (sym kA) for selective breaking at the installation point of the branch circuit breaker are shown below.

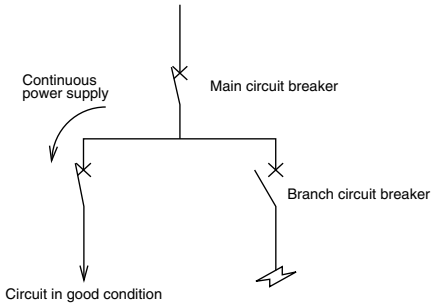

Table 4-22-1 Combination for selective breaking

440VAC (IEC 60947-2)

sym.kA

		Circuit breaker																												
		NF125-SEV	NF125-HEV	NFC250-SMXA	NF250-SV	NF250-SEV	NF250-SXV	NF250-SGV	NF250-LXV	NF250-LGV	NF250-HV	NF250-HEV	NF250-HXV	NF250-HGV	NF400-SW	NF400-SEW	NF400-HEW	NF400-REW	NF630-CW	NF630-SW	NF630-SEW	NF630-HEW	NF630-REW	NF800-CEW	NF800-SEW	NF800-HEW	NF800-REW	NF1000-SEW	NF1250-SEW	NF1600-SEW
Breaking capacity Icu(kA)		36	65	25	36	36	36	36	50	50	65	65	65	65	42	42	65	125	36	42	42	65	125	36	42	65	65	85	85	85
BHW-T10 TYPE B 6-63A	10	–	–	2	2	2.5	2	1.5	2	1.5	2	2.5	2	1.5	4.5	7.5	7.5	7.5	7.5	7.5	10	10	10	10	10	10	10	10	10	10
BHW-T10 TYPE C 0.5-63A	10	–	–	2	2	2.5	2	1.5	2	1.5	2	2.5	2	1.5	4.5	7.5	7.5	7.5	7.5	7.5	10	10	10	10	10	10	10	10	10	10
BHW-T10 TYPE D 0.5-63A	10	–	–	2	2	2.5	2	1.5	2	1.5	2	2.5	2	1.5	4.5	7.5	7.5	7.5	7.5	7.5	10	10	10	10	10	10	10	10	10	10
BHW-T10 TYPE B 80-125A	10	–	–	2	2	2.5	2	1.5	2	1.5	2	2.5	2	1.5	4.5	6	6	6	6	7.5	7.5	7.5	10	10	10	10	10	10	10	10
BHW-T10 TYPE C 80-125A	10	–	–	2	2	2.5	2	1.5	2	1.5	2	2.5	2	1.5	4.5	6	6	6	6	7.5	7.5	7.5	10	10	10	10	10	10	10	10
NFC60-HMXA	10	1.5	1.5	2	2	2.5	2	1.5	2	1.5	2	2.5	2	1.5	5	5	5	5	5	7.5	10	10	10	10	10	10	10	10	10	10
NFC100-SMXA	25	–	–	–	–	2.5	–	–	–	–	–	2.5	–	–	5	5	5	5	5	7.5	10	10	10	10	10	10	10	13	13	20
NFC160-SMXA	25	–	–	–	–	–	–	–	–	–	–	–	–	–	–	–	–	–	5	7.5	7.5	7.5	7.5	7.5	7.5	7.5	7.5	10	13	20
NFC250-SMXA	25	–	–	–	–	–	–	–	–	–	–	–	–	–	–	–	–	–	5	7.5	7.5	7.5	7.5	7.5	7.5	7.5	7.5	10	13	20
NF32-SV	2.5	1.5	1.5	2	2	2.5	2	1.5	2	1.5	2	2.5	2	1.5	2.5	2.5	2.5	2.5	2.5	2.5	2.5	2.5	2.5	2.5	2.5	2.5	2.5	2.5	2.5	2.5
NF63-CV	2.5	1.5	1.5	2	2	2.5	2	1.5	2	1.5	2	2.5	2	1.5	2.5	2.5	2.5	2.5	2.5	2.5	2.5	2.5	2.5	2.5	2.5	2.5	2.5	7.5	7.5	2.5
NF63-SV	7.5	1.5	1.5	2	2	2.5	2	1.5	2	1.5	2	2.5	2	1.5	5	7.5	7.5	7.5	6	7.5	7.5	7.5	7.5	7.5	7.5	7.5	7.5	7.5	7.5	7.5
NF63-HV	10	1.5	1.5	2	2	2.5	2	1.5	2	1.5	2	2.5	2	1.5	5	7.5	7.5	7.5	6	7.5	10	10	10	10	10	10	10	10	10	10
NF125-CV	10	–	–	–	–	2.5	–	–	–	–	–	2.5	–	–	4.5	5	5	5	5	7	10	10	10	10	10	10	10	15	15	10
NF125-SV	25	–	–	–	–	2.5	–	–	–	–	–	2.5	–	–	4.5	5	5	5	5	7	10	10	10	10	10	10	10	10	10	22
NF125-SEV	36	–	–	–	2	2.5	2	1.5	1.5	1.5	1.5	2.5	1.5	1.5	4.5	5	5	5	5	7	10	10	10	10	10	10	10	10	10	22
NF125-SXV	36	–	–	–	–	2.5	–	–	–	–	–	2.5	–	–	4.5	5	5	5	5	7	10	10	10	10	10	10	10	10	10	22
NF125-SGV	36	–	–	–	–	2.5	–	–	–	–	–	2.5	–	–	4.5	7.5	7.5	7.5	5	7	15	15	15	15	15	15	15	15	15	36
NF125-LXV	50	–	–	–	–	2.5	–	–	–	–	–	2.5	–	–	4.5	5	5	5	5	7	10	10	10	15	15	15	15	15	15	22
NF125-LGV	50	–	–	–	–	2.5	–	–	–	–	–	2.5	–	–	4.5	7.5	7.5	7.5	5	7	15	15	15	15	15	15	15	15	15	42
NF125-HV	50	–	–	–	–	2.5	–	–	–	–	–	2.5	–	–	4.5	7.5	7.5	7.5	5	7	18	18	18	18	18	18	18	18	18	50
NF125-HEV	65	–	–	–	2	2.5	2	1.5	1.5	1.5	1.5	2.5	1.5	1.5	4.5	7.5	7.5	7.5	5	7	18	18	18	18	18	18	18	18	18	50
NF125-HXV	65	–	–	–	–	2.5	–	–	–	–	–	2.5	–	–	4.5	5	5	5	5	7	10	10	10	15	15	15	15	15	15	22
NF125-HGV	65	–	–	–	–	2.5	–	–	–	–	–	2.5	–	–	4.5	7.5	7.5	7.5	5	7	15	15	15	15	15	15	15	15	15	42
NF125-RGV	125	–	–	–	–	2.5	–	–	–	–	–	2.5	–	–	6	15	15	15	7.5	12	30	30	30	30	42	50	50	50	50	85
NF125-UV	200	–	–	–	–	2.5	–	–	–	–	–	2.5	–	–	7.5	15	15	15	7.5	15	30	30	30	30	42	50	50	50	50	85
NF160-SGV	36	–	–	–	–	–	–	–	–	–	–	–	–	–	4.5	6.4	6.4	6.4	4.5	7	10	10	10	10	10	10	10	10	10	25
NF160-LGV	50	–	–	–	–	–	–	–	–	–	–	–	–	–	4.5	6.4	6.4	6.4	4.5	7	10	10	10	15	15	15	15	15	15	25
NF160-HGV	65	–	–	–	–	–	–	–	–	–	–	–	–	–	4.5	6.4	6.4	6.4	4.5	7	10	10	10	15	15	15	15	15	15	25
NF250-CV	25	–	–	–	–	–	–	–	–	–	–	–	–	–	–	–	–	–	4.5	6	7.5	7.5	7.5	7.5	7.5	7.5	7.5	7.5	7.5	15
NF250-SV	36	–	–	–	–	–	–	–	–	–	–	–	–	–	–	–	–	–	4.5	7	10	10	10	10	10	10	10	10	10	22
NF250-SEV	36	–	–	–	–	–	–	–	–	–	–	–	–	–	–	–	–	–	4.5	7	10	10	10	10	10	10	10	10	10	22
NF250-SXV	36	–	–	–	–	–	–	–	–	–	–	–	–	–	–	–	–	–	4.5	7	10	10	10	10	10	10	10	10	10	22
NF250-SGV	36	–	–	–	–	–	–	–	–	–	–	–	–	–	–	–	–	–	4.5	7	10	10	10	10	10	10	10	10	10	25
NF250-LXV	50	–	–	–	–	–	–	–	–	–	–	–	–	–	–	–	–	–	4.5	7	10	10	10	15	15	15	15	15	15	22
NF250-LGV	50	–	–	–	–	–	–	–	–	–	–	–	–	–	–	–	–	–	4.5	7	10	10	10	15	15	15	15	15	15	25
NF250-HV	65	–	–	–	–	–	–	–	–	–	–	–	–	–	–	–	–	–	4.5	7	10	10	10	10	10	10	10	10	10	22
NF250-HEV	65	–	–	–	–	–	–	–	–	–	–	–	–	–	–	–	–	–	4.5	7	10	10	10	10	10	10	10	10	10	22
NF250-HXV	65	–	–	–	–	–	–	–	–	–	–	–	–	–	–	–	–	–	4.5	7	10	10	10	15	15	15	15	15	15	22
NF250-HGV	65	–	–	–	–	–	–	–	–	–	–	–	–	–	–	–	–	–	4.5	7	10	10	10	15	15	15	15	15	15	25
NF250-RGV	125	–	–	–	–	–	–	–	–	–	–	–	–	–	–	–	–	–	5	8	15	15	15	15	25	25	25	25	25	85
NF250-UV	200	–	–	–	–	–	–	–	–	–	–	–	–	–	–	–	–	–	5	8	15	15	15	15	25	25	25	25	25	85
NF400-CW	36	–	–	–	–	–	–	–	–	–	–	–	–	–	–	–	–	–	–	–	–	–	–	10	10	10	10	13	13	20
NF400-SW	42	–	–	–	–	–	–	–	–	–	–	–	–	–	–	–	–	–	–	–	–	–	–	13	13	13	13	13	13	20
NF400-SEW	42	–	–	–	–	–	–	–	–	–	–	–	–	–	–	–	–	–	–	–	9.5	9.5	9.5	13	13	13	13	13	13	20
NF400-HEW	65	–	–	–	–	–	–	–	–	–	–	–	–	–	–	–	–	–	–	–	9.5	9.5	9.5	10	10	10	10	13	13	20
NF400-REW	125	–	–	–	–	–	–	–	–	–	–	–	–	–	–	–	–	–	–	–	9.5	9.5	9.5	10	10	10	10	13	13	20
NF400-UEW	200	–	–	–	–	–	–	–	–	–	–	–	–	–	–	–	–	–	–	–	9.5	9.5	9.5	15	15	15	15	15	15	25
NF630-CW	36	–	–	–	–	–	–	–	–	–	–	–	–	–	–	–	–	–	–	–	–	–	–	–	–	–	–	–	–	20
NF630-SW	42	–	–	–	–	–	–	–	–	–	–	–	–	–	–	–	–	–	–	–	–	–	–	–	–	–	–	–	–	20
NF630-SEW	42	–	–	–	–	–	–	–	–	–	–	–	–	–	–	–	–	–	–	–	–	–	–	–	–	–	–	–	–	20
NF630-HEW	65	–	–	–	–	–	–	–	–	–	–	–	–	–	–	–	–	–	–	–	–	–	–	–	–	–	–	–	–	20
NF630-REW	125	–	–	–	–	–	–	–	–	–	–	–	–	–	–	–	–	–	–	–	–	–	–	–	–	–	–	–	–	20
NF800-UEW	200	–	–	–	–	–	–	–	–	–	–	–	–	–	–	–	–	–	–	–	–	–	–	–	–	–	–	–	–	–

Note *1 Rated currents of branch breakers are 50A or less.
Remarks: 1. It is considered that the instantaneous tripping characteristic values of main circuit breakers have been set to the maximum values.
2. For the selectivity in the overcurrent range, separately check the coordination on the operating characteristic curve.

Table 4-22-2 Combination for selective breaking

230VAC (IEC 60947-2)

sym.kA

		Circuit breaker																													
Breaking capacity		NF125-SEV	NF125-HEV	NFC250-SMXA	NF250-SV	NF250-SEV	NF250-SXV	NF250-SGV	NF250-LXV	NF250-LGV	NF250-HV	NF250-HEV	NF250-HXV	NF250-HGV	NF400-SW	NF400-SEW	NF400-HEW	NF400-REW	NF630-CW	NF630-SW	NF630-SEW	NF630-HEW	NF630-REW	NF800-CEW	NF800-SEW	NF800-HEW	NF800-REW	NF1000-SEW	NF1250-SEW	NF1600-SEW
Icu(kA)		85	100	50	85	85	85	85	90	90	100	100	100	100	85	85	100	150	50	85	85	100	150	50	85	100	150	125	125	125
BHW-T10 TYPE B 6-63A	10	–	–	2	2	2.5	2	1.5	2	1.5	2	2.5	2	1.5	6	10	10	10	7.5	7.5	10	10	10	10	10	10	10	10	10	10
BHW-T10 TYPE C 0.5-63A	10	–	–	2	2	2.5	2	1.5	2	1.5	2	2.5	2	1.5	6	10	10	10	7.5	7.5	10	10	10	10	10	10	10	10	10	10
BHW-T10 TYPE D 0.5-63A	10	–	–	2	2	2.5	2	1.5	2	1.5	2	2.5	2	1.5	6	10	10	10	7.5	7.5	10	10	10	10	10	10	10	10	10	10
BHW-T10 TYPE B 80-125A	10	–	–	2	2	2.5	2	1.5	2	1.5	2	2.5	2	1.5	4.5	6	6	6	6	7.5	7.5	7.5	10	10	10	10	10	10	10	10
BHW-T10 TYPE C 80-125A	10	–	–	2	2	2.5	2	1.5	2	1.5	2	2.5	2	1.5	4.5	6	6	6	6	7.5	7.5	7.5	10	10	10	10	10	10	10	10
NFC60-HMXA	25	1.5	1.5	2	2	2.5	2	1.5	2	1.5	2	2.5	2	1.5	5	5	5	5	5	7.5	10	10	10	10	10	10	10	13	13	20
NFC100-SMXA	50	–	–	–	–	2.5	–	–	–	–	–	2.5	–	–	5	5	5	5	5	7.5	10	10	10	10	10	10	10	13	13	20
NFC160-SMXA	50	–	–	–	–	–	–	–	–	–	–	–	–	–	–	–	–	–	5	7.5	7.5	7.5	7.5	7.5	7.5	7.5	7.5	10	13	20
NFC250-SMXA	50	–	–	–	–	–	–	–	–	–	–	–	–	–	–	–	–	–	5	7.5	7.5	7.5	7.5	7.5	7.5	7.5	7.5	10	13	20
NF32-SV	7.5	1.5	1.5	2	2	2.5	2	1.5	2	1.5	2	2.5	2	1.5	5	5	5	5	5	7.5	7.5	7.5	7.5	7.5	7.5	7.5	7.5	7.5	7.5	7.5
NF63-CV	7.5	1.5	1.5	2	2	2.5	2	1.5	2	1.5	2	2.5	2	1.5	5	7.5	7.5	7.5	5	7.5	7.5	7.5	7.5	7.5	7.5	7.5	7.5	7.5	7.5	7.5
NF63-SV	15	1.5	1.5	2	2	2.5	2	1.5	2	1.5	2	2.5	2	1.5	6	10	10	10	7	10	10	10	10	10	10	10	10	10	10	10
NF63-HV	25	1.5	1.5	2	2	2.5	2	1.5	2	1.5	2	2.5	2	1.5	6	10	10	10	7	12	20	20	20	25	25	25	25	25	25	25
NF125-CV	30	–	–	–	–	2.5	–	–	–	–	–	2.5	–	–	5	7.5	7.5	7.5	6	9	10	15	15	15	15	15	15	15	15	25
NF125-SV	50	–	–	–	–	2.5	–	–	–	–	–	2.5	–	–	7.5	7.5	7.5	7.5	8	15	15	15	15	18	18	18	18	18	18	50
NF125-SEV	85	–	–	–	2	2.5	2	1.5	2	1.5	2	2.5	2	1.5	7.5	7.5	7.5	7.5	8	15	15	15	15	18	18	18	18	18	18	50
NF125-SXV	75	–	–	–	–	2.5	–	–	–	–	–	2.5	–	–	7.5	7.5	7.5	7.5	8	15	15	15	15	18	18	18	18	18	18	50
NF125-SGV	85	–	–	–	–	2.5	–	–	–	–	–	2.5	–	–	7.5	7.5	7.5	7.5	8	15	15	15	15	18	18	18	18	18	18	85
NF125-LXV	90	–	–	–	–	2.5	–	–	–	–	–	2.5	–	–	7.5	7.5	7.5	7.5	8	15	15	15	15	18	18	18	18	18	18	50
NF125-LGV	90	–	–	–	–	2.5	–	–	–	–	–	2.5	–	–	7.5	7.5	7.5	7.5	8	15	15	15	15	18	18	18	18	18	18	85
NF125-HV	100	–	–	–	–	2.5	–	–	–	–	–	2.5	–	–	7.5	10	10	10	8	15	25	25	25	35	35	35	35	35	35	100
NF125-HEV	100	–	–	–	2	2.5	2	1.5	2	1.5	2	2.5	2	1.5	7.5	10	10	10	8	15	25	25	25	35	35	35	35	35	35	100
NF125-HXV	100	–	–	–	–	2.5	–	–	–	–	–	2.5	–	–	7.5	7.5	7.5	7.5	8	15	15	15	15	18	18	18	18	18	18	50
NF125-HGV	100	–	–	–	–	2.5	–	–	–	–	–	2.5	–	–	7.5	7.5	7.5	7.5	8	15	15	15	15	18	18	18	18	18	18	85
NF125-RGV	150	–	–	–	–	2.5	–	–	–	–	–	2.5	–	–	7.5	22	22	22	8	15	65	65	65	50	85	85	85	85	85	125
NF125-UV	200	–	–	–	–	2.5	–	–	–	–	–	2.5	–	–	7.5	22	22	22	8	15	65	65	65	50	85	85	85	85	85	125
NF160-SGV	85	–	–	–	–	–	–	–	–	–	–	–	–	–	5	6.4	6.4	6.4	5	8	10	10	10	10	10	10	10	10	10	50
NF160-LGV	90	–	–	–	–	–	–	–	–	–	–	–	–	–	5	6.4	6.4	6.4	5	8	10	10	10	10	10	10	10	10	10	50
NF160-HGV	100	–	–	–	–	–	–	–	–	–	–	–	–	–	5	6.4	6.4	6.4	5	8	10	10	10	10	10	10	10	10	10	50
NF250-CV	36	–	–	–	–	–	–	–	–	–	–	–	–	–	–	–	–	–	5	7.5	7.5	7.5	7.5	7.5	7.5	7.5	7.5	7.5	7.5	25
NF250-SV	85	–	–	–	–	–	–	–	–	–	–	–	–	–	–	–	–	–	5	8	10	10	10	10	10	10	10	10	10	50
NF250-SEV	85	–	–	–	–	–	–	–	–	–	–	–	–	–	–	–	–	–	5	8	10	10	10	10	10	10	10	10	10	50
NF250-SXV	85	–	–	–	–	–	–	–	–	–	–	–	–	–	–	–	–	–	5	8	10	10	10	10	10	10	10	10	10	50
NF250-SGV	85	–	–	–	–	–	–	–	–	–	–	–	–	–	–	–	–	–	5	8	10	10	10	10	10	10	10	10	10	50
NF250-LXV	90	–	–	–	–	–	–	–	–	–	–	–	–	–	–	–	–	–	5	8	10	10	10	10	10	10	10	10	10	50
NF250-LGV	90	–	–	–	–	–	–	–	–	–	–	–	–	–	–	–	–	–	5	8	10	10	10	10	10	10	10	10	10	50
NF250-HV	100	–	–	–	–	–	–	–	–	–	–	–	–	–	–	–	–	–	5	8	10	10	10	10	10	10	10	10	10	50
NF250-HEV	100	–	–	–	–	–	–	–	–	–	–	–	–	–	–	–	–	–	5	8	10	10	10	10	10	10	10	10	10	50
NF250-HXV	100	–	–	–	–	–	–	–	–	–	–	–	–	–	–	–	–	–	5	8	10	10	10	10	10	10	10	10	10	50
NF250-HGV	100	–	–	–	–	–	–	–	–	–	–	–	–	–	–	–	–	–	5	8	10	10	10	10	10	10	10	10	10	50
NF250-RGV	150	–	–	–	–	–	–	–	–	–	–	–	–	–	–	–	–	–	–	–	–	–	–	18	50	50	50	50	50	125
NF250-UV	200	–	–	–	–	–	–	–	–	–	–	–	–	–	–	–	–	–	–	–	–	–	–	18	50	50	50	50	50	125
NF400-CW	50	–	–	–	–	–	–	–	–	–	–	–	–	–	–	–	–	–	–	–	–	–	–	13	13	13	13	13	13	20
NF400-SW	85	–	–	–	–	–	–	–	–	–	–	–	–	–	–	–	–	–	–	–	–	–	–	13	13	13	13	13	13	20
NF400-SEW	85	–	–	–	–	–	–	–	–	–	–	–	–	–	–	–	–	–	–	–	–	–	–	13	13	13	13	13	13	20
NF400-HEW	100	–	–	–	–	–	–	–	–	–	–	–	–	–	–	–	–	–	–	–	–	–	–	13	13	13	13	13	13	20
NF400-REW	150	–	–	–	–	–	–	–	–	–	–	–	–	–	–	–	–	–	–	–	9.5	9.5	9.5	13	13	13	13	13	13	20
NF400-UEW	200	–	–	–	–	–	–	–	–	–	–	–	–	–	–	–	–	–	–	–	–	–	–	15	15	15	15	15	15	25
NF630-CW	50	–	–	–	–	–	–	–	–	–	–	–	–	–	–	–	–	–	–	–	–	–	–	–	–	–	–	–	–	20
NF630-SW	85	–	–	–	–	–	–	–	–	–	–	–	–	–	–	–	–	–	–	–	–	–	–	–	–	–	–	–	–	20
NF630-SEW	85	–	–	–	–	–	–	–	–	–	–	–	–	–	–	–	–	–	–	–	–	–	–	–	–	–	–	–	–	20
NF630-HEW	100	–	–	–	–	–	–	–	–	–	–	–	–	–	–	–	–	–	–	–	–	–	–	–	–	–	–	–	–	20
NF630-REW	150	–	–	–	–	–	–	–	–	–	–	–	–	–	–	–	–	–	–	–	–	–	–	–	–	–	–	–	–	20
NF800-UEW	200	–	–	–	–	–	–	–	–	–	–	–	–	–	–	–	–	–	–	–	–	–	–	–	–	–	–	–	–	–

Note *1 Rated currents of branch breakers are 50A or less.
Remarks: 1. It is considered that the instantaneous tripping characteristic values of main circuit breakers have been set to the maximum values.
2. For the selectivity in the overcurrent range, separately check the coordination on the operating characteristic curve.

Table 4-22-3 Combination for selective breaking with AE-SW Series

440VAC (IEC 60947-2)

sym.kA

Branch breaker	Rated ultimate short-circuit breaking capacity of each breaker / Main breaker	Icu(kA)	Low-voltage air circuit breaker AE-SW								
			AE630-SW	AE1000-SW	AE1250-SW	AE1600-SW	AE2000-SWA	AE2000-SW	AE2500-SW	AE3200-SW	AE4000-SWA
			65	65	65	65	65	85	85	85	85
NF-S・L・H・NV-S・H	NF32-SV	2.5	2.5	2.5	2.5	2.5	2.5	2.5	2.5	2.5	2.5
	NV32-SV	5	5	5	5	5	5	5	5	5	5
	NF63-SV NV63-SV	7.5	7.5	7.5	7.5	7.5	7.5	7.5	7.5	7.5	7.5
	NF63-HV NV63-HV	10	9(10)	10	10	10	10	10	10	10	10
	NF125-SV NV125-SV	25	7(25)	20(25)	25	25	25	25	25	25	25
	NF125-SEV NV125-SEV	36	7(36)	20(36)	25(36)	30(36)	36	36	36	36	36
	NF125-SXV	36	7(36)	20(36)	25(36)	36	36	36	36	36	36
	NF125-SGV	36	9(36)	20(36)	36	36	36	36	36	36	36
	NF125-LXV	50	7(50)	20(50)	25(50)	42(50)	50	50	50	50	50
	NF125-LGV	50	9(50)	20(50)	36(50)	50	50	50	50	50	50
	NF125-HXV	65	7(65)	20(65)	25(65)	42(65)	65	65	65	65	65
	NF125-HGV	65	9(65)	20(65)	36(65)	65	65	65	65	65	65
	NF125-HV NV125-HV	50	9(50)	30(50)	50	50	50	50	50	50	50
	NF160-SGV	36	9(36)	15(36)	25(36)	36	36	36	36	36	36
	NF160-LGV	50	9(50)	15(50)	25(50)	42(50)	42(50)	50	50	50	50
	NF160-HGV	65	9(65)	15(65)	25(65)	42(65)	42(65)	65	65	65	65
	NF250-SV NF250-SEV NV250-SV NV250-SEV	36	7(36)	14(36)	19(36)	25(36)	25(36)	36	36	36	36
	NF250-SXV	36	7(36)	14(36)	19(36)	25(36)	25(36)	36	36	36	36
	NF250-SGV	36	7(36)	15(36)	25(36)	36	36	36	36	36	36
	NF250-LXV	50	7(50)	15(50)	25(50)	42(50)	42(50)	50	50	50	50
	NF250-LGV	50	7(50)	15(50)	25(50)	42(50)	42(50)	50	50	50	50
	NF250-HXV	65	7(65)	15(65)	25(65)	42(65)	42(65)	65	65	65	65
	NF250-HGV	65	7(65)	15(65)	25(65)	42(65)	42(65)	65	65	65	65
	NF250-HV NF250-HEV NV250-HV NV250-HEV	65	7(65)	15(65)	25(65)	42(65)	42(65)	65	65	65	65
	NF400-SW NV400-SW	42	–	–	18(42)	24(42)	24(42)	33(42)	42	42	42
	NF400-SEW NV400-SEW	42	9(42)	15(42)	18(42)	24(42)	24(42)	30(42)	39(42)	42	42
	NF400-HEW NV400-HEW	65	9(65)	15(65)	18(65)	24(65)	24(65)	30(65)	39(65)	65	65
	NF400-REW NV400-REW	125	9(65)	15(65)	18(65)	24(65)	24(65)	30(75)	39(75)	80	80
	NF630-SW NF630-SEW NV630-SW NV630-SEW	42	–	–	–	24(42)	24(42)	30(42)	37(42)	42	42
	NF630-HEW NV630-HEW	65	–	15(65)	18(65)	24(65)	24(65)	30(65)	37(65)	48(65)	48(65)
	NF800-SEW NV800-SEW	42	–	–	18(42)	24(42)	24(42)	30(42)	37(42)	42	42
	NF800-HEW NV800-HEW	65	–	–	18(65)	24(65)	24(65)	30(65)	37(65)	48(65)	48(65)
NF-C・NV-C	NF63-CV NV63-CV	2.5	2.5	2.5	2.5	2.5	2.5	2.5	2.5	2.5	2.5
	NF125-CV NV125-CV	10	9(10)	10	10	10	10	10	10	10	10
	NF250-CV NV250-CV	15	9(15)	15	15	15	15	15	15	15	15
	NF400-CW NV400-CW	25	–	15(25)	18(25)	25	25	25	25	25	25
	NF630-CW NV630-CW	36	–	–	–	24(36)	24(36)	30(42)	36	36	36
	NF800-CEW	36	–	–	18(36)	24(36)	24(36)	30(42)	36	36	36
NF-R・U	NF125-RGV	125	35(65)	65	65	65	65	85	85	85	85
	NF125-UV	200	50(65)	65	65	65	65	85	85	85	85
	NF250-RGV	125	9(65)	50(65)	65	65	65	85	85	85	85
	NF250-UV	200	9(65)	65	65	65	65	85	85	85	85
	NF400-UEW	200	9(65)	15(65)	18(65)	29(65)	29(65)	48(75)	85	85	85
	NF800-UEW	200	–	–	18(65)	24(65)	24(65)	30(75)	37(75)	68(75)	68(75)

Notes *1 The values in the table represent the max. rated current for both Series AE-SW air circuit breakers and branch breakers, and the selective co-ordination applies when the air circuit breakers instantaneous pick up is set to maximum.
*2 The numerals shown in parentheses are for AE-SW with MCR. (When set MCR.)

230VAC (IEC 60947-2)

sym.kA

Branch breaker	Rated ultimate short-circuit breaking capacity of each breaker / Main breaker	Icu(kA)	Low-voltage air circuit breaker AE-SW								
			AE630-SW	AE1000-SW	AE1250-SW	AE1600-SW	AE2000-SWA	AE2000-SW	AE2500-SW	AE3200-SW	AE4000-SWA
			65	65	65	65	65	85	85	85	85
NF-S・L・H・NV-S・H	NF32-SV	7.5	7.5	7.5	7.5	7.5	7.5	7.5	7.5	7.5	7.5
	NV32-SV	10	9(10)	10	10	10	10	10	10	10	10
	NF63-SV NV63-SV	15	9(10)	15	15	15	15	15	15	15	15
	NF63-HV NV63-HV	25	9(25)	25	25	25	25	25	25	25	25
	NF125-SV NV125-SV	50	9(50)	45(50)	50	50	50	50	50	50	50
	NF125-SEV NV125-SEV	85	9(65)	45(65)	50(65)	50(65)	50(65)	85	85	85	85
	NF125-SXV	75	9(65)	45(65)	65	65	65	75	75	75	75
	NF125-SGV	75	16(65)	45(65)	65	65	65	85	85	85	85
	NF125-LXV	90	9(65)	45(65)	50(65)	50(65)	50(65)	85	85	85	85
	NF125-LGV	90	16(65)	45(65)	65	65	65	85	85	85	85
	NF125-HXV	100	9(65)	45(65)	50(65)	50(65)	50(65)	85	85	85	85
	NF125-HGV	100	16(65)	45(65)	65	65	65	85	85	85	85
	NF125-HV NV125-HV	100	9(65)	50(65)	65	65	65	85	85	85	85
	NF160-SGV	85	9.4(65)	25(65)	40(65)	65	65	85	85	85	85
	NF160-LGV	90	9.4(65)	25(65)	40(65)	65	65	85	85	85	85
	NF160-HGV	100	9.4(65)	25(65)	40(65)	65	65	85	85	85	85
	NF250-SV NF250-SEV NV250-SV NV250-SEV	85	9(65)	20(65)	22(65)	42(65)	42(65)	50(85)	85	85	85
	NF250-SXV	85	9(65)	20(65)	22(65)	42(65)	42(65)	50(85)	85	85	85
	NF250-SGV	85	9.4(65)	25(65)	40(65)	65	65	85	85	85	85
	NF250-LXV	90	9(65)	25(65)	40(65)	65	65	85	85	85	85
	NF250-LGV	90	9.4(65)	25(65)	40(65)	65	65	85	85	85	85
	NF250-HXV	100	9(65)	25(65)	40(65)	65	65	85	85	85	85
	NF250-HGV	100	9.4(65)	25(65)	40(65)	65	65	85	85	85	85
	NF250-HV NF250-HEV NV250-HV NV250-HEV	100	9(65)	25(65)	40(65)	65	65	85	85	85	85
	NF400-SW NV400-SW	85	–	–	20(65)	30(65)	30(65)	48(75)	70(75)	85	85
	NF400-SEW NV400-SEW	85	9(65)	15(65)	20(65)	30(65)	30(65)	48(75)	70(75)	85	85
	NF400-HEW NV400-HEW	100	9(65)	15(65)	20(65)	30(65)	30(65)	48(75)	70(75)	85	85
	NF400-REW NV400-REW	150	9(65)	15(65)	20(65)	30(65)	30(65)	48(75)	70(75)	85	85
	NF630-SW NF630-SEW NV630-SW NV630-SEW	85	–	–	–	24(65)	24(65)	30(75)	40(75)	60(75)	60(75)
	NF630-HEW NV630-HEW	100	–	15(65)	18(65)	24(65)	24(65)	30(75)	40(75)	60(75)	60(75)
	NF800-SEW NV800-SEW	85	–	–	18(65)	24(65)	24(65)	30(75)	40(75)	60(75)	60(75)
	NF800-HEW NV800-HEW	100	–	–	18(65)	24(65)	24(65)	30(75)	40(75)	60(75)	60(75)
NF-C・NV-C	NF63-CV NV63-CV	7.5	7.5	7.5	7.5	7.5	7.5	7.5	7.5	7.5	7.5
	NF125-CV NV125-CV	30	9(30)	15(30)	18(30)	24(30)	24(30)	30	30	30	30
	NF250-CV NV250-CV	36	9(36)	15(36)	18(36)	24(36)	24(36)	36	36	36	36
	NF400-CW NV400-CW	50	–	15(50)	20(50)	27(50)	27(50)	42(50)	50	50	50
	NF630-CW NV630-CW	50	–	–	–	24(50)	24(50)	30(50)	40(50)	50	50
	NF800-CEW	50	–	–	18(50)	24(50)	24(50)	30(50)	40(50)	50	50
NF-R・U	NF125-RGV	150	65	65	65	65	65	85	85	85	85
	NF125-UV	200	65	65	65	65	65	85	85	85	85
	NF250-RGV	150	9(65)	65	65	65	65	85	85	85	85
	NF250-UV	200	9(65)	65	65	65	65	85	85	85	85
	NF400-UEW	200	9(65)	15(65)	18(65)	29(65)	29(65)	48(75)	85	85	85
	NF800-UEW	200	–	–	18(65)	24(65)	24(65)	30(75)	37(75)	68(75)	68(75)

11. Combinations for Cascade Breaking

The following tables show the combinations of circuit breakers capable of cascade breaking and the cascade breaking capacities (symmetrical values, sym kA). The criteria conform to IEC 60947-2.

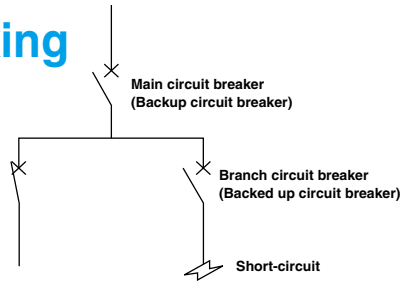

Table 4-23-1 440VAC (IEC 60947-2)

sym.kA

Branch breaker \ Main breaker (Rated ultimate short-circuit breaking capacity of each breaker)		NF-S • NV-S • NF-H • NV-H																							NF-C • NV-C				NF-R • NF-U					
		NF125-SV, NV125-SV	NF125-SGV	NF125-LGV	NF125-HV, NV125-HV	NF125-HGV	NF160-SGV	NF160-LGV	NF160-HGV	NF250-SV, NV250-SV	NF250-SGV	NF250-LGV	NF250-HV, NV250-HV	NF250-HGV	NF400-SW, NV400-SW	NF400-HEW, NV400-HEW	NF400-REW, NV400-REW	NF630-SW, NV630-SW	NF630-HEW, NV630-HEW	NF630-REW	NF800-SEW, NV800-SEW	NF800-HEW, NV800-HEW	NF800-REW	NF1000-SEW, NF1250-SEW, NF1600-SEW	NF250-CV, NV250-CV	NF400-CW, NV400-CW	NF630-CW, NV630-CW	NF800-CEW	NF125-RGV, NV125-RGV	NF125-UV	NF250-RGV	NF250-UV	NF400-UEW	NF800-UEW
	Icu(kA)	25	36	50	50	65	36	50	65	36	36	50	65	65	42	65	125	42	65	125	42	65	125	85	15	25	36	36	125	200	125	200	200	200
NF-S • NV-S • NF-L • NF-H • NV-H	NF32-SV	2.5	10	14	14	14	14	5	5	5	5	5	5	5	5	–	–	–	–	–	–	–	–	–	–	5	–	–	–	35	125	35	50	–	–
	NV32-SV	5	14	14	14	14	14	10	10	10	10	10	10	10	10	7.5	7.5	7.5	7.5	7.5	7.5	–	–	–	–	–	–	–	–	50	125	35	50	–	–
	NF63-SV	7.5	14	14	14	20	20	15	15	15	15	15	15	10	15	15	15	15	10	10	10	10	10	10	–	–	10	10	–	50	125	50	50	10	10
	NV63-SV	7.5	14	14	14	20	20	10	10	10	10	10	10	10	10	–	–	–	–	–	–	–	–	–	–	–	10	10	–	50	125	50	50	–	–
	NF63-HV NV63-HV	10	20	30	30	30	30	18	18	18	18	18	18	18	18	15	15	15	14	14	14	–	–	–	–	–	–	–	–	125	125	50	50	–	–
	NF125-SV NV125-SV	25	–	36	36	50	50	36	36	50	–	36	50	42	50	35	35	35	35	35	35	30	35	35	30	–	–	–	–	125	200	125	200	50	35
	NF125-SXV	36	–	–	50	50	50	–	50	50	–	–	50	42	50	–	–	–	–	–	–	–	–	–	–	–	–	–	–	125	200	125	200	50	–
	NF125-SGV	36	–	–	50	–	50	–	50	50	–	–	50	–	50	–	50	50	–	50	50	–	50	50	–	–	–	–	–	125	200	125	200	50	–
	NF125-LXV NF125-LGV	50	–	–	–	–	–	–	–	–	–	–	–	–	–	–	–	–	–	–	–	–	–	–	–	–	–	–	–	125	200	125	200	50	–
	NF125-HV NV125-HV	50	–	–	–	–	65	–	–	65	–	–	–	–	65	–	65	65	–	65	65	–	65	65	–	–	–	–	–	125	200	125	200	200	85
	NF125-HXV NF125-HGV	65	–	–	–	–	–	–	–	–	–	–	–	–	–	–	–	–	–	–	–	–	–	–	–	–	–	–	–	125	200	125	200	200	85
	NF160-SGV	36	–	–	–	–	–	–	–	–	–	–	–	–	–	–	50	50	–	50	50	–	50	50	50	–	–	–	–	–	–	125	200	85	85
	NF160-LGV	50	–	–	–	–	–	–	–	65	–	–	–	–	65	–	65	65	–	65	65	–	65	65	65	–	–	–	–	–	–	125	200	85	85
	NF160-HGV	65	–	–	–	–	–	–	–	–	–	–	–	–	–	–	–	–	–	–	–	–	–	–	–	–	–	–	–	–	–	125	200	200	200
	NF250-SV NV250-SV	36	–	–	–	–	–	–	–	–	–	–	–	–	–	–	50	50	–	50	50	–	50	50	–	–	–	–	–	–	–	125	200	85	85
	NF250-SXV NF250-SGV	36	–	–	–	–	–	–	–	–	–	–	–	–	–	–	50	50	–	50	50	–	50	50	50	–	–	–	–	–	–	125	200	85	85
	NF250-LXV NF250-LGV	50	–	–	–	–	–	–	–	–	–	–	–	–	65	–	65	65	–	65	65	–	65	65	–	–	–	–	–	–	–	125	200	200	200
	NF250-HV NV250-HV	65	–	–	–	–	–	–	–	–	–	–	–	–	–	–	–	–	–	–	–	–	–	–	–	–	–	–	–	–	–	125	200	200	200
	NF250-HXV NF250-HGV	65	–	–	–	–	–	–	–	–	–	–	–	–	–	–	–	–	–	–	–	–	–	–	–	–	–	–	–	–	–	125	200	200	200
	NF400-SW NF400-SEW NV400-SW NV400-SEW	42	–	–	–	–	–	–	–	–	–	–	–	–	–	–	65	65	–	65	65	–	65	65	–	–	–	–	–	–	–	–	–	200	200
	NF630-SW NF630-SEW NV630-SW NV630-SEW	42	–	–	–	–	–	–	–	–	–	–	–	–	–	–	–	–	–	65	65	–	65	65	–	–	–	–	–	–	–	–	–	–	200
NF-C • NV-C	NF63-CV NV63-CV	2.5	10	14	14	14	14	5	5	5	5	5	5	5	5	–	–	–	–	–	–	–	–	–	–	5	–	–	–	35	125	35	50	5	–
	NF125-CV NV125-CV	10	20	30	30	30	30	14	14	14	14	14	14	14	14	14	14	14	14	14	14	14	14	–	–	14	14	14	125	200	50	125	14	14
	NF250-CV NV250-CV	15	–	–	–	–	–	–	–	–	–	–	–	–	–	30	30	30	–	–	–	–	–	–	–	–	–	–	–	–	–	125	200	50	–
	NF400-CW NV400-CW	25	–	–	–	–	–	–	–	–	–	–	–	–	–	35	35	35	35	35	35	35	35	35	30	–	–	–	–	–	–	–	–	50	50
	NF630-CW NV630-CW	36	–	–	–	–	–	–	–	–	–	–	–	–	–	–	–	–	42	50	50	42	50	50	42	–	–	–	–	–	–	–	–	–	200

Note Rated currents of main breakers are maximum values.

Table 4-23-2 230VAC (IEC 60947-2)

sym.kA

Main breaker / Rated ultimate short-circuit breaking capacity of each breaker			NF-S • NV-S • NF-H • NV-H																						NF-C • NV-C				NF-R • NF-U					
Branch breaker		Icu(kA)	NF125-SV, NV125-SV	NF125-SGV	NF125-LGV	NF125-HV, NV125-HV	NF125-HGV	NF160-SGV	NF160-LGV	NF160-HGV	NF250-SV, NV250-SV	NF250-SGV	NF250-LGV	NF250-HV, NV250-HV	NF250-HGV	NF400-SW, NV400-SW	NF400-HEW, NV400-HEW	NF400-REW, NV400-REW	NF630-SW, NV630-SW	NF630-HEW, NV630-HEW	NF630-REW	NF800-SEW, NV800-SEW	NF800-HEW, NV800-HEW	NF800-REW	NF1000-SEW, NF1250-SEW, NF1600-SEW	NF250-CV, NV250-CV	NF400-CW, NV400-CW	NF630-CW, NV630-CW	NF800-CEW	NF125-RGV, NV125-RGV	NF125-UV	NF250-RGV	NF250-UV	NF400-UEW	NF800-UEW
		50	85	90	100	100	85	90	100	85	85	90	100	100	85	100	150	85	100	150	85	100	150	125	36	50	50	50	150	200	150	200	200	200
NF-S • NV-S • NF-L • NF-H • NV-H	NF32-SV	7.5	42	50	50	50	50	10	10	10	10	10	10	10	10	–	–	–	–	–	–	–	–	–	–	–	–	–	–	125	200	35	50	–	–
	NV32-SV	10	42	50	50	50	50	35	35	35	35	35	35	35	35	14	14	14	14	14	14	–	–	–	–	25	14	14	–	125	200	35	50	–	–
	NF63-SV	15	42	85	85	85	85	35	35	35	35	35	35	35	35	30	30	30	30	30	30	–	–	–	–	25	–	–	–	125	200	85	125	–	–
	NV63-SV	15	42	85	85	85	85	35	35	35	35	35	35	35	35	–	–	–	–	–	–	–	–	–	–	25	–	–	–	125	200	85	125	–	–
	NF63-HV NV63-HV	25	50	85	90	100	100	50	50	50	50	50	50	50	50	50	50	50	50	50	50	–	–	–	–	–	30	30	–	125	200	85	125	–	–
	NF125-SV NV125-SV	50	–	85	90	100	100	85	85	85	–	85	85	85	85	85	85	85	85	85	85	–	–	–	–	–	–	–	–	125	200	125	200	200	125
	NF125-SXV	75	–	–	90	100	100	85	85	85	–	85	85	85	85	85	85	85	85	85	85	–	–	–	–	–	–	–	–	125	200	125	200	200	125
	NF125-SGV	85	–	–	–	100	–	–	–	–	–	–	–	–	–	–	–	–	–	–	–	–	–	–	–	–	–	–	–	125	200	125	200	200	125
	NF125-LXV NF125-LGV	90	–	–	–	–	–	–	–	–	–	–	–	–	–	–	–	–	–	–	–	–	–	–	–	–	–	–	–	125	200	125	200	200	200
	NF125-HV NV125-HV	100	–	–	–	–	–	–	–	–	–	–	–	–	–	–	–	–	–	–	–	–	–	–	–	–	–	–	–	125	200	125	200	200	125
	NF125-HXV NF125-HGV	100	–	–	–	–	–	–	–	–	–	–	–	–	–	–	–	–	–	–	–	–	–	–	–	–	–	–	–	125	200	125	200	200	200
	NF160-SGV	85	–	–	–	–	–	–	–	–	–	–	–	–	–	–	–	–	–	–	–	–	–	–	–	–	–	–	–	–	–	125	200	200	125
	NF160-LGV	90	–	–	–	–	–	–	–	–	–	–	–	–	–	–	–	–	–	–	–	–	–	–	–	–	–	–	–	–	–	125	200	200	200
	NF160-HGV	100	–	–	–	–	–	–	–	–	–	–	–	–	–	–	–	–	–	–	–	–	–	–	–	–	–	–	–	–	–	125	200	200	200
	NF250-SV NV250-SV	85	–	–	–	–	–	–	–	–	–	–	–	–	–	–	–	–	–	–	–	–	–	–	–	–	–	–	–	–	–	125	200	200	125
	NF250-SXV NF250-SGV	85	–	–	–	–	–	–	–	–	–	–	–	–	–	–	–	–	–	–	–	–	–	–	–	–	–	–	–	–	–	125	200	200	125
	NF250-LXV NF250-LGV	90	–	–	–	–	–	–	–	–	–	–	–	–	–	–	–	–	–	–	–	–	–	–	–	–	–	–	–	–	–	125	200	200	200
	NF250-HV NV250-HV	100	–	–	–	–	–	–	–	–	–	–	–	–	–	–	–	–	–	–	–	–	–	–	–	–	–	–	–	–	–	125	200	200	200
	NF250-HXV NF250-HGV	100	–	–	–	–	–	–	–	–	–	–	–	–	–	–	–	–	–	–	–	–	–	–	–	–	–	–	–	–	–	125	200	200	200
	NF400-SW NF400-SEW NV400-SW NV400-SEW	85	–	–	–	–	–	–	–	–	–	–	–	–	–	–	–	–	–	–	–	–	–	–	100	–	–	–	–	–	–	–	–	200	200
	NF630-SW NF630-SEW NV630-SW NV630-SEW	85	–	–	–	–	–	–	–	–	–	–	–	–	–	–	–	–	–	–	–	–	–	–	100	–	–	–	–	–	–	–	–	–	200
NF-C • NV-C	NF63-CV NV63-CV	7.5	35	50	50	50	50	10	10	10	10	10	10	10	10	–	–	–	–	–	–	–	–	–	–	–	–	–	–	125	200	35	50	–	–
	NF125-CV NV125-CV	30	35	85	85	85	85	50	50	50	50	50	50	50	50	50	50	50	50	50	50	50	–	–	–	–	–	–	–	125	200	85	125	50	–
	NF250-CV NV250-CV	36	–	–	–	–	–	–	–	–	50	50	50	50	50	50	50	50	50	50	50	50	–	–	–	–	–	–	–	–	–	125	200	200	50
	NF400-CW NV400-CW	50	–	–	–	–	–	–	–	–	–	–	–	–	–	85	85	85	85	85	85	85	85	85	85	–	–	–	–	–	–	–	–	200	200
	NF630-CW NV630-CW	50	–	–	–	–	–	–	–	–	–	–	–	–	–	–	–	–	85	85	85	85	85	85	85	–	–	–	–	–	–	–	–	–	200
BH	BH BH-P	2.5	30	42	42	42	42	7.5	7.5	7.5	5	7.5	7.5	7.5	–	–	–	–	–	–	–	–	–	–	–	5	–	–	–	125	200	–	–	–	–

Note Rated currents of main breakers are maximum values.

12. International Standard Comformance List

12.1 UL and CSA Approval Product

●UL (Underwriter's Laboratories) Standards: UL 489, UL 1077

UL is an organization in the US which establishes safety standards, i.e. UL Standards, conducts safety verification test based on the UL Standards, issues the certificates to approved products and allows the manufacturers to attach the certification mark to the products. The UL certification mark has been spread widely in the US. Some states and cities oblige manufacturers to receive the UL certification. When devices, control panels and machines are exported to the US, these products must be UL certified. UL certified products have received UL Recognition or UL Listing in conformity to UL Standards (UL 489, UL1077) and allowed to be used in control panels and machines to be exported to the US.

: UL Recognition
Refers to component certification for products designed to be built in other products and devices. UL recognized products can be used in control panels, machine tools and control units.

: UL Listing
Refers to product certification for products which can be sold directly to end-users and used by end-users. These products can be used also as built-in components in control panels, machine tools and control units. Some models vary in external dimensions and terminal structure from standard models. Please refer to the page of UL listed products for details.

●CSA (Canadian Standard Association) Standards: CSA C22.2 No.5-02

The CSA Standards are product safety standards established by CSA. In Canada, the safety of electric products is regulated by the state laws, and some state laws prescribe that circuit breakers shall be certified by the CSA Standards. Therefore, when devices, control panels and machines are exported to Canada, these products must be CSA certified. UL certified products have received CSA certification from the testing body UL and allowed to be used in control panels and machines to be exported to Canada. UL has been authorized as a testing, certification and quality certification body by SCC, and CSA certified products tested by UL have been approved by the safety regulations in all states of Canada. It is allowed to attach the following certification marks to products certified by both UL and CSA. (It is also allowed to attach the separate marks for the US and Canada as before.)

: Recognition for US and Canada
UL and CSA recognition of components by testing body UL

: Listing for US and Canada
UL and CSA recognition of components by testing body UL

12.2 CCC (China Compulsory Certification) Approval Product

Low-voltage circuit breakers are designated as products to be compulsorily certified in China. To export such products to China and sell them in China, it is necessary to obtain the CCC certification.

12.3 Corresponding to EC (European Community) Directive

●Corresponding to LVD (Low Voltage Directive)

(1) When using a low voltage circuit breaker as a component and indicating conformity with the EC Directives
The CE Marking is required when a low voltage circuit breaker is distributed as a single device in EU. However, when the CE Mark is indicated on a machine tool or a control unit, it is unnecessary to affix the CE Mark to the low-voltage circuit breaker used as a built-in component. When the CE Mark is indicated on a machine tool or a control unit, it is recommended to use a product certified by a third party shown in Item (3) (TÜV certified product) as a low voltage circuit breaker.

(2) Measures for export of low voltage circuit breaker as single unit
When exporting a low-voltage circuit breaker as a single unit in EU, the circuit breaker is covered by the Low Voltage Directive. The certification of conformity with the Low Voltage Directive is self-declared as a rule. The applicable product standards are shown below.
EN 60947-2 Low-voltage switchgear and controlgear-Part 2: Circuit-breakers
EN 60934 Circuit-breakers for equipment (CBE)

(3) Models certified by third party (TÜV certified products)
When the CE Mark is indicated on a machine tool or a control unit, it is recommended to use a low voltage circuit breaker certified by a third party (TÜV certified product) as a built-in component.

●Corresponding to EMC (Electromagnetic Compatibility) Directive

The Directive prescribes that products shall not emit high-intensity radio waves to the outside and shall not be affected by external electromagnetic waves. Molded case circuit breakers (electronic type) and earth leakage circuit breakers are covered by the EMC Directive.

●Corresponding to Machinery Directive

Low voltage circuit breakers are components used in equipment, such as machine tools and control units, and are not covered by any machinery directive. When the CE Mark is indicated on a machine tool or a control unit, it is recommended to use a low voltage circuit breaker certified by a third party (TÜV certified product) as a built-in component.

●Molded Case Circuit Breakers and Motor Protection Breakers

Specifications	Class	Applicable Models and Assignments	North American Safety Mark					Compulsory Mark		Third Party Mark	Classification Society (*1)
			UL Stgandards			CSA Standards		CCC	CE	TÜV Rheinland	NK
			USA			Canada		China	Europe	Germany	Japan
General	C	NF30-CS	–	–	–	–	–	●	●	●	●
		NF63-CV, NF125-CV	–	–	–	–	–	●	●(Self Declaration)	–	●
		NF250-CV	–	–	–	–	–	●	●	●	●
		NF400-CW, NF630-CW, NF800-CEW	–	–	–	–	–	●	●(Self Declaration)	–	●
	S	NF32-SV, NF63-SV, NF125-SV	–	–	–	–	–	●	●(Self Declaration)	–	●
		NF125-SXV, NF250-SXV	–	–	–	–	–	●	●(Self Declaration)	–	–
		NF125-SEV	–	–	–	–	–	●	●(Self Declaration)	–	–
		NF250-SV	–	–	–	–	–	●	●	●(Except for 4P)	●
		NF125-SGV, NF160-SGV, NF250-SGV, NF250-SEV	–	–	–	–	–	●	●(Self Declaration)	–	–
		NF400-SW, NF630-SW NF400-SEW, NF630-SEW NF800-SEW, NF800-SDW	–	–	–	–	–	●	●(Self Declaration)	–	●
		NF1000-SEW, NF1250-SEW	–	–	–	–	–	●	●(Self Declaration)	–	●
		NF1600-SEW	–	–	–	–	–	●	●(Self Declaration)	–	–
		NF1250-SDW, NF1600-SDW	–	–	–	–	–	–	●(Self Declaration)	–	–
	L/H/R	NF63-HV	–	–	–	–	–	●	●(Self Declaration)	–	●
		NF125-HV	–	–	–	–	–	●	●(Self Declaration)	–	●
		NF125-LXV, NF125-HXV	–	–	–	–	–	●	●(Self Declaration)	–	–
		NF125-HEV	–	–	–	–	–	●	●(Self Declaration)	–	–
		NF250-HV	–	–	–	–	–	●	●(Self Declaration)	–	●
		NF250-LXV, NF250-HXV	–	–	–	–	–	●	●(Self Declaration)	–	–
		NF125-LGV, NF125-HGV, NF160-LGV, NF250-LGV, NF250-HGV, NF250-HEV, NF125-RGV, NF250-RGV	–	–	–	–	–	●	●(Self Declaration)	–	–
		NF400-HEW, NF400-REW NF630-HEW, NF630-REW NF800-HEW, NF800-REW	–	–	–	–	–	●	●(Self Declaration)	–	●
	U	NF125-UV	–	–	–	–	–	–	●(Self Declaration)	–	●
		NF250-UV, NF400-UEW	–	–	–	–	–	–	●(Self Declaration)	–	●
		NF800-UEW	–	–	–	–	–	–	●(Self Declaration)	–	–
	Motor Protection	NF32-SV MB, NF63-CV MB, NF63-SV MB, NF125-SV MB	–	–	–	–	–	●	●(Self Declaration)	–	●
		NF250-SV MB	–	–	–	–	–	●	●	●	●
UL	UL 489 Listed	NF50-SVFU, NF100-CVFU	–	–	–	●	–	●	●	●	–
		NF125-SVU, NF125-HVU	–	–	–	●	–	●	●	●	–
		NF225-CWU	–	–	–	●	–	●(Except for 250A)	●	●(Except for 250A)	–
		NF250-SVU, NF250-HVU	–	–	–	●	–	●	●	●	–
		NF400-SWU, NF400-HWU NF630-SWU, NF630-HWU	–	–	–	●	–	–	●	●	–

Note *1 Except for 4 poles breaker.
Remark: 1. KC (Korea Certification) Mark and GOST-R (Russian Standards) approval products are prepared. Please inquire details.

●Earth Leakage Circuit Breakers

Specifications	Class	Applicable Models and Assignments	North American Safety Mark					Compulsory Mark		Third Party Mark	Classification Society
			UL Stgandards			CSA Standards		CCC	CE	TÜV Rheinland	NK
			USA			Canada		China	Europe	Germany	Japan
CE and CCC	C	NV63-CV, NV125-CV	–	–	–	–	–	●(Except for 2P)	●(Self Declaration)	–	–
		NV250-CV	–	–	–	–	–	●	●	●	–
		NV400-CW, NV630-CW	–	–	–	–	–	●	●(Self Declaration)	–	–
	S	NV32-SV, NV63-SV	–	–	–	–	–	●	●(Self Declaration)	–	–
		NV125-SV	–	–	–	–	–	●	●(Self Declaration)	–	–
		NV250-SV	–	–	–	–	–	●	●	●	–
		NV125-SEV, NV250-SEV, NV400-SW, NV400-SEW, NV630-SW, NV630-SEW, NV800-SEW	–	–	–	–	–	●	●(Self Declaration)	–	–
	H/R	NV63-HV	–	–	–	–	–	●	●(Self Declaration)	–	–
		NV125-HV	–	–	–	–	–	●	●(Self Declaration)	–	–
		NV125-HEV, NV250-HV, NV250-HEV	–	–	–	–	–	●	●(Self Declaration)	–	–
		NV400-HEW, NV400-REW, NV630-HEW, NV800-HEW	–	–	–	–	–	–	–	–	–
UL	UL 489 Listed	NV50-SVFU, NV100-CVFU	–	–	–	●	–	●	●	●	–
		NV125-SVU, NV125-HVU	–	–	–	●	–	●	●	●	–
		NV250-SVU, NV250-HVU	–	–	–	●	–	●	●	●	–

Remark: 1. KC (Korea Certification) Mark and GOST-R (Russian Standards) approval products are prepared. Please inquire details.

●Miniature Circuit Breakers

Specifications	Class	Applicable Models	Compulsory Mark	
			CCC	CE
			China	Europe
IEC	BH	BH	–	–
		BH-P	–	–
General	DIN	BHW-T10	–	●(Self Declaration)
		BVW-T	–	●(Self Declaration)
		KBW-T	–	●(Self Declaration)

●Circuit Protectors

Specifications	Class	Applicable Models and Assignments	North American Safety Mark					Compulsory Mark		Third Party Mark	Classification Society
			UL Stgandards				CSA Standards	CCC	CE	TÜV Rheinland	NK
			USA				Canada	China	Europe	Germany	Japan
General	CP	CP30-BA	–	–	●	–	–	●	●(EN 60934) ●(EN 60947-2) (Self-Declaration)	●(EN 60934) –	–
		CP-S	–	–	–	–	–	–	–	–	–

Remark: 1. KC (Korea Certification) Mark and GOST-R (Russian Standards) approval products are prepared. Please inquire details.

●Air Circuit Breakers

Specifications	Class	Applicable Models	Assignments	North American Safety Mark					Compulsory Mark		Third Party Mark
				UL Stgandards				CSA Standards	CCC	CE	TÜV Rheinland
				USA				Canada	China	Europe	Germany
IEC	SW	AE630-SW, AE1000-SW AE1250-SW, AE1600-SW AE2000-SWA, AE2000-SW AE2500-SW, AE3200-SW AE4000-SWA, AE4000-SW AE5000-SW, AE6300-SW	IEC 60947-2 or JIS C 8201-2-1	–	–	–	–	–	–	●(Self Declaration)	–
	SH	AE630-SH, AE1000-SH AE1250-SH, AE1600-SH AE2000-SH, AE2500-SH AE3200-SH	IEC 60947-2	–	–	–	–	–	–	●(Self Declaration)	–
JEC	SW	AE630-SW, AE1000-SW AE1250-SW, AE1600-SW AE2000-SWA, AE2000-SW AE2500-SW, AE3200-SW AE4000-SWA, AE4000-SW AE5000-SW, AE6300-SW	JEC 160	–	–	–	–	–	–	–	–
	SH	AE630-SH, AE1000-SH AE1250-SH, AE1600-SH AE2000-SH, AE2500-SH AE3200-SH		–	–	–	–	–	–	–	–
CCC	SW	AE630-SW, AE1000-SW AE1250-SW, AE1600-SW AE2000-SWA, AE2000-SW AE2500-SW, AE3200-SW AE4000-SWA, AE4000-SW AE5000-SW, AE6300-SW	CCC	–	–	–	–	–	●	●(Self Declaration)	–

Note *1 Except for four poles breaker.
Remark: 1. GOST-R (Russian Standards) approval products are prepared. Please inquire details.

●Molded Case Circuit Breakers , Motor Protection Breakers, Air Circuit Breakers, Circuit Protectors and Miniature Circuit Breakers (Classification Society)

Specifications	Class	Applicable Models	Classification societies (Note)						
			NK	LR	ABS	GL	BV	CCS	DNV
			Japan	United Kingdom	USA	Germany	France	China	Norway
General	C	NF30-CS	●	●	●	–	–	–	–
		NF63-CV, NF125-CV	●	●	●	●	●	●	●
		NF250-CV	●	●	●	●	●	●	●
		NF400-CW, NF630-CW	●	●	●	●	●	–	–
		NF800-CEW	●	●	●	●	●	–	●
	S	NF32-SV, NF63-SV, NF125-SV	●	●	●	●	●	●	●
		NF125-SXV, NF125-SGV NF250-SXV, NF250-SGV	–	●	●	●	●	●	●
		NF250-SV	●	●	●	●	●	●	●
		NF400-SW, NF630-SW	●	●	●	●	●	●	–
		NF400-SEW, NF630-SEW NF800-SEW							●
		NF1000-SEW, NF1250-SEW	●	●	●	–	–	–	–
	L	NF125-LXV, NF125-LGV NF250-LXV, NF250-LGV	–	●	●	●	●	●	●
	H/R	NF63-HV, NF125-HV	●	●	●	●	●	●	●
		NF125-HXV, NF125-HGV NF250-HXV, NF250-HGV	–	●	●	●	●	●	●
		NF250-HV	●	●	●	●	●	●	●
		NF400-HEW, NF400-REW						●	–
		NF630-HEW, NF630-REW NF800-HEW, NF800-REW						(HEW) –	
	U	NF125-UV, NF250-UV	●	●	●	●	●	●	●
		NF400-UEW, NF800-UEW						–	–
	Motor Protection	NF32-SV MB, NF63-CV MB NF63-SV MB, NF125-SV MB NF250-SV MB	●	●	●	●	●	–	●
	AE	AE630-SW, AE1000-SW AE1250-SW, AE1600-SW AE2000-SWA, AE2000-SW AE2500-SW, AE3200-SW AE4000-SWA	●	●	●	●	●	●	●
		AE4000-SW, AE5000-SW, AE6300-SW	●	●	●	●	●	–	–
	CP	CP30-BA	●	–	–	–	–	–	–
	BH	BH-P	●	●	●	●	●	–	–

Remark: 1. Four poles breakers does not acquire Classification Society approval.

1. Electric Shock Protection

The safety standards for current passing through the human body are determined based on physiological phenomena as shown to the right.

- ●In places where secondary accidents may be caused by electric shock: Area below the curve b
- ●In places where secondary accidents will not be caused by electric shock: Area below the curve c1

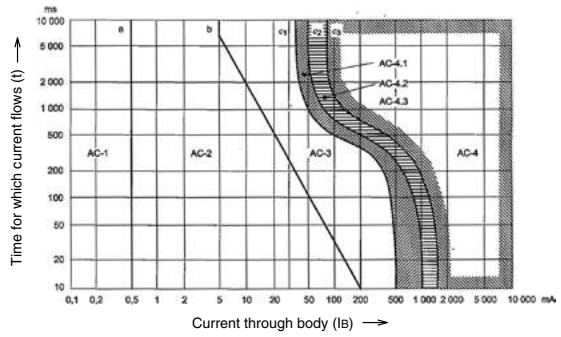

Fig. 4.17 Influence of AC (15 Hz to 100 Hz) on human body (IEC/TS60479-1)

2. ELCB Grounding Method

Select the rated sensitivity current based on the grounding method, purpose of protection and protection ground resistance value of load device. If the line is excessively long, the circuit breaker may operate unnecessarily owing to leakage current. Calculate the leakage current referring to Table 4-25. In this case, it is common to select sensitivity current approx. 10 times as high as the leakage current.

Table 4-24

Type of earthing system	TN system			TT system	IT system
	TN-C system	TN-S system	TN-C-S system		
Typical arrangement	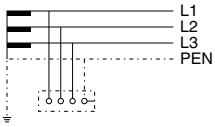	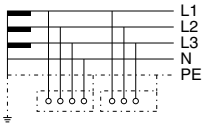	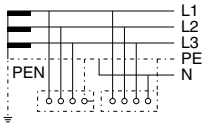	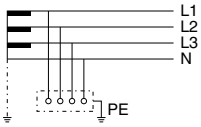	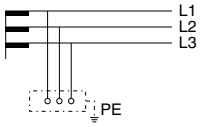
Protective condition	The touch voltage is limited to 50V.				
	$Zs \times Ia \leq 50$ V Zs: fault loop impedance (Ω) Ia: current causing the automatic operation of the disconnecting device within the time as below (A) U_0: nominal line to earth voltage (V)			$R_A \times I_{\Delta n} \leq 50$ V R_A: sum of the resistances of the earth electrode and the protective conductor (Ω) $I_{\Delta n}$: rated current sensitivity (A)	$Id \times R_A \leq 50$ V R_A: sum of the resistances of the earth electrode and the protective conductor (Ω) Id: first fault current (A)
	Maximum disconnection times (sec)				
Earth leakage protective device	- MCCBs Not ELCBs	- MCCBs - ELCBs	- MCCBs - ELCBs (except in TN-C zone)	- ELCBs	- Insulation monitoring devices + ELCBs

U_0 AC	Branch circuits rated 32 A and less				Others
	120 V	230 V	400 V	Over 400 V	
TN system	0.8	0.4	0.2	0.1	5
TT system	0.3	0.2	0.07	0.04	1

Table 4-25 Leakage current when 600-V vinyl insulated wire is laid on 1-km Δ-connected 3-phase 3-wire 200-V line

Distance from grounded part / Wiring work / Wire size	Ⓐ 4 m or more	Ⓑ 10 cm or more	Ⓒ 1.5 mm or more	Ⓓ In close contact
	• Wiring on first floor ceiling of wooden building • Wiring on second and higher floors of wooden building • Aerial wiring (Except Ⓒ and Ⓓ)	• Wiring in RC building • Wiring with vinyl tube and exposed wiring in steel frames (Except Ⓒ and Ⓓ)	• Vinyl tube burying • Vinyl tube laying in close contact with steel frames in steel building	• Wiring in metallic conduit • Wiring in metallic duct
8 mm² or less	0.60 mA/km	1.29 mA/km	19.9 mA/km	100 mA/km
14	0.66	1.44	22.1	110
22	0.72	1.55	23.9	120
38	0.81	1.75	26.9	135
60	0.99	2.14	32.9	165
100	1.14	2.46	37.9	189
150	1.25	2.72	41.8	209
250	1.46	3.16	48.6	243
325	1.52	3.29	50.7	253
500	1.71	3.69	56.8	284

Notes *1 The leakage current on rubber insulated wire (RB) is about 70% of the above values, and that on 3-core 600-V cross-linked polyethylene insulated wire (CV) is about 50%.
*2 At 50 Hz, the values are 84% of the above values.
*3 To obtain the leakage current on another line, multiply the values shown in Table 4-25 by the magnification shown in Table 4-26.
*4 To determine the line length, add the length of all wires after ELCB installation point.

Table 4-26 Leakage current conversion table

Type of line	Magnification
Single-phase 100-V line	0.3
Single-phase 3-wire 200-V line	0.3
3-phase 415-V line (λ connection)	0.7

3. Rated Voltage and Number of Poles

Select the rated voltage and number of poles according to the circuit voltage and type. The following table shows the standard circuit voltage values. However, even at special voltage, if the voltage including the circuit voltage fluctuation is within the voltage range shown right, the leakage protection device will operate.

Voltage fluctuation range in which leakage protection function is operable

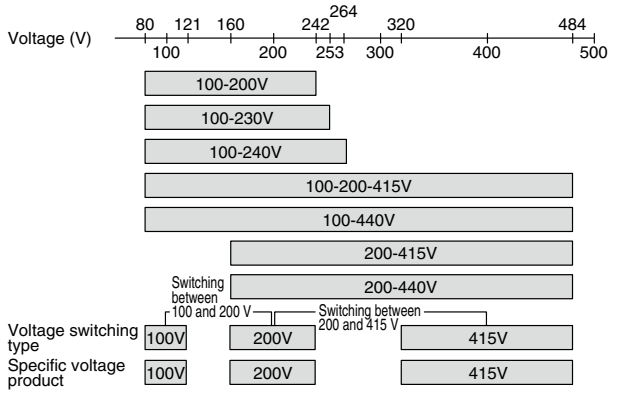

Table 4-27

Circuit type	Single-phase 2-wire 100- or 200-V circuit	Single-phase 3-wire 100- and 200-V circuit
Example of connection	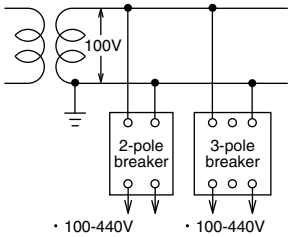 ・100-440V ・100-200-415V ・100-200V ・100-240V ・100-440V ・100-200-415V ・100-200V ・100-230V ・100V 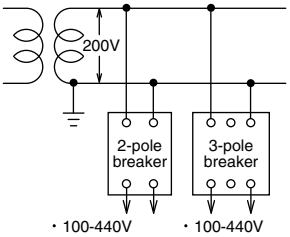 ・100-440V ・100-200-415V ・100-200V ・100-240V ・100-440V ・100-200-415V ・100-200V ・100-230V ・200-415V ・200-440V	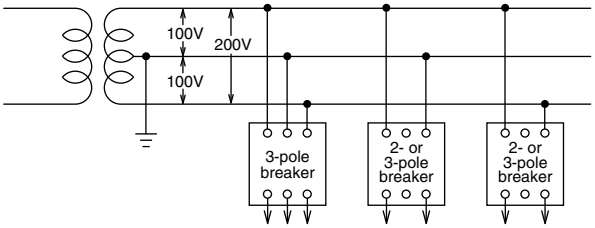 ・100-200-415V ・100-200V ・200-415V ・100-230V ・100-440V ・200-440V ・100-200-415V ・100-200V ・100V ・100-240V ・100-230V ・100-440V ・100-200-415V ・100-200V ・200-415V ・100-240V ・100-230V ・100-440V ・200-440V
Circuit type	3-phase 3-wire 200-V circuit	3-phase 3-wire 415-V circuit
Example of connection	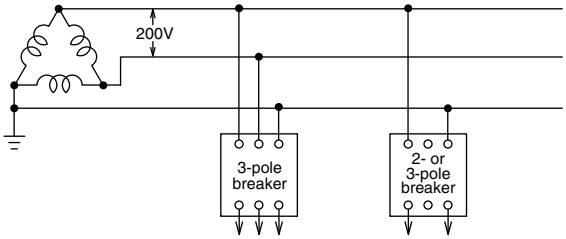 ・100-200-415V ・100-200V ・200-415V ・100-440V ・100-230V ・200-440V ・100-200-415V ・100-200V ・200-415V ・100-240V ・100-440V ・200-440V	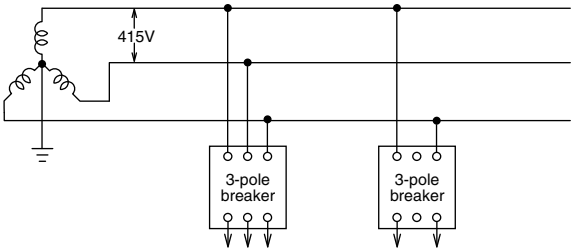 ・100-200-415V ・200-415V ・415V ・100-440V ・200-440V ・100-200-415V ・200-415V ・415V ・100-440V ・200-440V
Circuit type	3-phase 4-wire 415-V circuit	
Example of connection	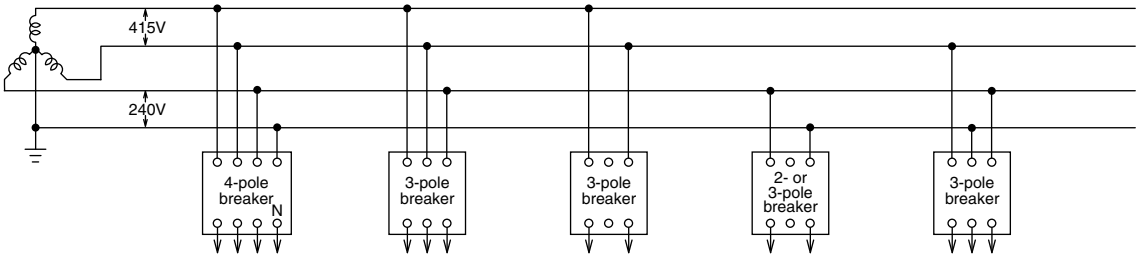 ・100-200-415V ・200-415V ・100-440V ・200-440V ・100-200-415V ・200-415V ・415V ・100-440V ・200-440V ・100-200-415V ・200-415V ・415V ・100-440V ・200-440V ・100-200-415V ・200-415V ・100-240V ・100-440V ・200-440V ・100-200-415V ・200-415V ・100-440V ・200-440V	

<Cautions when selecting and connecting>

(1) When a 3-pole circuit breaker is used as a 2-pole one, use the right and left poles.

(2) For the mains of a 3-phase 4-wire 415-V circuit, use a 4-pole circuit breaker having a rated voltage of 415 V or 440 V, and connect the neutral pole to the N pole on the right side.

4. Earth Fault Protection Coordination and Combination of Devices

Table 4-28

Protection type	Details	Installation point	Combination
With selectivity only for earth fault breaking	●On general lines, the protection grounding resistance is relatively large and the earth fault current is small. In this case, install a time-delay relay on the main circuit and a high-speed relay on a branch circuit.	Main circuit	• Time-delay ELCB • Combination of MCCB and time-delay earth leakage relay
		Branch circuit	High-speed ELCB
With selectivity for earth fault breaking and cascade type of short-circuit breaking	●The selectivity for earth fault breaking is as stated above. ●Significant short-circuit fault very rarely occurs because of its nature (in most cases, circuits are broken at the early stage of earth fault). This protection is applied when the continuity of power supply is expendable. (Refer to the combination for cascade breaking on page 82.)	Main circuit	• Class S time-delay ELCB • Combination of MCCB (class U) and time-delay earth leakage relay
		Branch circuit	• Class C time-delay ELCB • Combination of MCCB (class C) and high-speed earth leakage relay
With selectivity for earth fault breaking and short-circuit breaking	●This protection is applied when selectivity is necessary in the entire area of fault. (Refer to the combination for selective breaking on page 81.)	Main circuit	Combination of electronic MCCB and time-delay earth leakage relay
		Branch circuit	• High-speed ELCB • Combination of MCCB and high-sspeed earth leakage relay

Remark: 1. “Time-delay or high-speed earth leakage relay” refers to NV-ZBA, NV-ZSA, NV-ZHA or NV-ZLA.

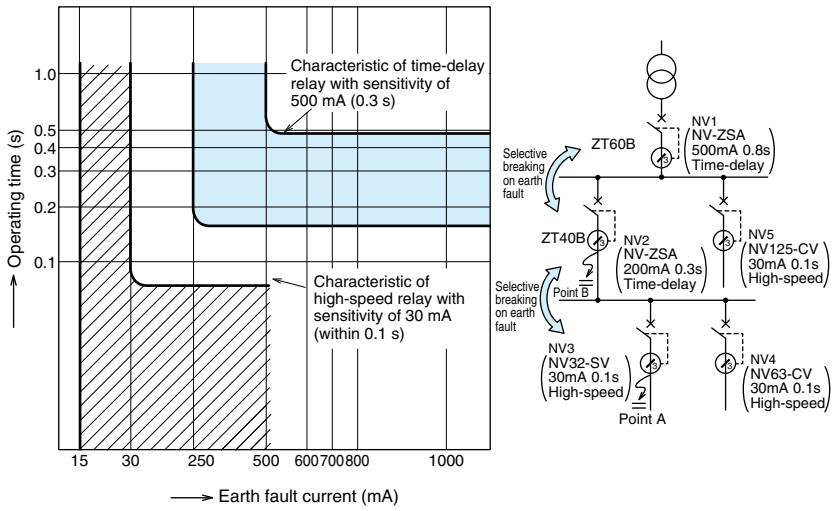

Fig. 4.18 Example of coordination of time-delay and high-speed relays for earth fault breaking

MEMO

5

Installation and Connection

1) Connection Types 92
2) Connecting Parts 94
3) Standard Tightening Torque 95
4) Crimp Terminal Type 96
5) Busbar 98
6) Insulation Distance on Power Source Side 99
7) Effect of Installation Orientation 100
8) Connection of Line and Load 100

1. Connection Types

Table 5-1 Connection

Connection type (Code address)			Front connection (F)			Rear (B)	
			Screw terminal (AMP-N)	Busbar terminal (BAR)	Solderless (BOX) terminal (SL)	Bar stud (B-ST)	Round stud (B-ST)
Image			Please refer to page 96.	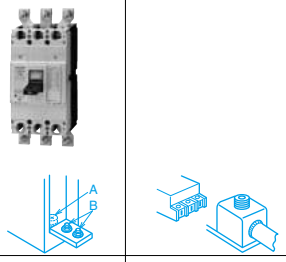		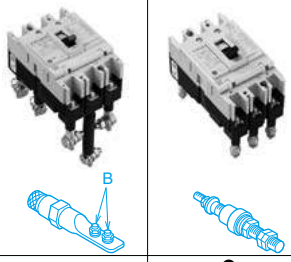	
MCCB	C•S•H•MB	NF30-CS	●	–	–	–	●
		NF32-SV • NF63-CV • NF63-SV • NF63-HV	●	●	–	–	●
		NF125-CV • NF125-SV • NF125-HV • NF125-SXV • NF125-LXV • NF125-HXV • NF125-SEV • NF125-SGV • NF125-LGV • NF125-HEV • NF125-HGV	●	●	●	●	–
		NF250-SXV • NF250-LXV • NF250-HXV • NF160-SGV • NF160-LGV • NF160-HGV • NF250-CV • NF250-SV • NF250-HV • NF250-SEV • NF250-HEV • NF250-SGV • NF250-LGV • NF250-HGV	●	●	●	●	–
		NF400-SW • NF400-SEW • NF400-HEW • NF400-REW • NF400-CW	–	●	–	●	–
		NF630-SW • NF630-SEW • NF630-HEW • NF630-REW • NF630-CW	–	●	–	●	–
		NF800-SEW • NF800-HEW • NF800-REW • NF800-SDW • NF800-CEW					
		NF1000-SEW • NF1250-SEW • NF1600-SEW				●	
	R•U	NF125-UV	●	●	●	●	–
		NF125-RGV • NF250-RGV • NF250-UV	●	●	●	●	–
		NF400-UEW	–	●	–	●	–
		NF800-UEW					
	UL	NF50-SVFU	●	●	–	–	–
		NF100-CVFU	●	●	●	–	–
		NF125-SVU NF125-HVU	●	●	●	–	–
		NF250-SVU NF250-HVU	●	●	●	–	–
		NF225-CWU	●	●	–	–	–
		NF-SKW • NF-SLW	–	●	●	–	–
BH		BH-P	●(Only load side)	–	–	–	–
ELCB	C•S•H	NV32-SV • NV63-CV • NV63-SV • NV63-HV	●	●	–	–	●
		NV125-CV • NV125-SV • NV125-HV • NV125-SEV • NV125-HEV	●	●	–	●	–
		NV250-CV/SV/HV • NV250-SEV/HEV	●	●	–	●	–
		NV400-SW • NV400-SEW • NV400-HEW • NV400-REW • NV400-CW	–	●	–	●	–
		NV630-SW • NV630-SEW • NV630-HEW • NV630-CW			–	●	
		NV800-SEW • NV800-HEW					

Remarks

Shape: Kind of terminal screw (A)
(Circuit breakers having frame size of 1000A and more are not provided with terminal screws (A).)

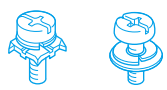

Shape	Pan-head screw with clamp			Pan-head screw		Bolt (Hex-socket)			Bolt
Screw size	M5			M8		M8	2×M8		M10
Type	NF32-SV 63-CV 63-SV 63-HV 50-SVFU(*1)	BH-P	NV32-SV 63-CV 63-SV 63-HV	NF 63-CV(60, 63A) 63-SV(60, 63A) 63-HV(60, 63A) 125-CV 125-SV 125-SXV 125-HV 125-SEV 125-HEV 100-CVFU 125-SVU 125-HVU 125-UV	NV 63-CV(60, 63A) 63-SV(60, 63A) 63-HV(60, 63A) 125-CV 125-SV 125-HV 125-SEV 125-HEV	NF 125-LXV 125-HXV 125-SEV 125-HEV 125-RGV 125-SGV 125-LGV 125-HGV 160-SXV 160-LXV 160-HXV 160-SGV 160-LGV 160-HGV 250-CV 250-SV 250-HV 250-SXV 250-LXV 250-HXV 250-SEV 250-HEV 250-SGV 250-LGV 250-HGV 250-RGV 250-UV 225-CWU 250-SVU 250-HVU NV 125-SEV 125-HEV 250-CV 250-SV 250-HV 250-SEV 250-HEV	NF 400-UEW (4P) 800-CEW 800-SEW 800-HEW 800-REW 800-UEW 800-SDW	NV 800-SEW 800-HEW	NF 400-CW 400-SW 400-SEW 400-HEW 400-REW 400-UEW(3P) 630-CW 630-SW 630-SEW 630-HEW 630-REW NV 400-CW 400-SW 400-SEW 400-HEW 400-REW 630-CW 630-SW 630-SEW 630-HEW

In case of clamp connection (*1)

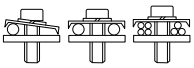

①When the wire size is 5.5 mm² or more, divide the wires, and connect them.
②When connecting wires differing in size, for example, ϕ1.6 wires and 5.5-mm² wires, connect the two kinds of wires together to a crimp terminal because the thinner wires easily come off.
③Do not tighten directly solid wires and cords consisting of thin copper wires used as strands, for example ϕ1.6 and 1.25-mm² wires, together.

●With insulating base (tube) for installation of metallic board
●The bar stud installation position can be turned 90° on all models (except NF800-UEW).
The current-carrying capacity of a vertically installed bus bar is larger than that of a horizontally installed bus bar even if the bus bars have the same dimensions.

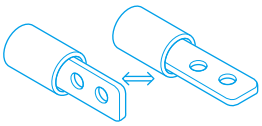

Note *1 It is impossible to directly connect the wires of 40- and 50-A, NF/NV 50-SVFU.

	Plug-in (PM)		Plug-in type for distribution board
	Bar stud (PM)	Screw terminal (PM)	For distribution board for electric lamps (BPA)
	–	–	–
	–	●	–
	–	●	–
	●	–	–
	●	–	–
	● (Except for NF1600-SEW)	–	–
	–	●(Except for 4P)	–
	●(Except for 4P)	–	–
	● (Except for NF800-UEW)	–	–
	–	–	–
	–	–	–
	–	–	–
	–	–	–
	–	–	–
	–	–	–
	–	–	●
	–	●	–
	–	●	–
	●	–	–
	●	–	–
	The circuit breaker can be connected only by pushing it onto the preliminarily wired terminal block. Install it tightening the supplied screws through the mounting holes.		Mounting base for distribution board for electric lamps. For the external dimensions, refer to page 136.

Table 5-2 List of terminal screws (B)

Model		Connection type	Front	Rear	Plug-in
MCCB	C • S • H	NF400-CW • NF400-SW • NF400-SEW • NF400-HEW • NF400-REW • NF630-CW • NF630-SW • NF630-SEW NF630-HEW • NF630-REW • NF800-CEW • NF800-SEW • NF800-HEW • NF800-REW • NF800-SDW • NF-SKW • NF-SLW	M12 bolt		
		NF1000-SEW • NF1250-SEW	M12 bolt		
		NF1600-SEW	M10 bolt		—
	U	NF400-UEW	M12 bolt		
		NF800-UEW	M12 bolt		—
ELCB	NV	NV400-SW • NV400-SEW • NV400-HEW • NV400-REW • NV400-CW • NV630-SW • NV630-SEW • NV630-HEW • NV630-CW • NV-SKW	M12 bolt		
		NV800-SEW • NV800-HEW	M12 bolt		

2. Connecting Parts

For the connection shown in the table on the previous page, the following parts are available as connecting parts.

Table 5-3 Studs on rear surface (B-ST)

Type name	Number of poles	Applicable models		Set of order	Stud shape and major included parts	Remarks
		MCCB	ELCB			
ST-05SV2	2	NF32-SV, NF63-CV, NF63-SV NF63-HV	NV32-SV, NV63-CV NV63-SV, NV63-HV	sets	★Round studs ●Round studs (with insulating tube) (2-pole: 4 pcs, 3-pole: 6 pcs, 4-pole: 8 pcs) ●Bolts and nuts	One set includes the parts for one unit. Please place an order for the number of circuit breakers.
ST-05SV3	3					
ST-05SV4	4	NF63-SV, NF63-HV	—			
ST-1SV2	2	NF125-CV, NF125-SV	—	sets	★Bar studs ●Bar studs (with insulating tube) (2-pole: 4 pcs, 3-pole: 6 pcs, 4-pole: 8 pcs) ●Bolts and nuts	
ST-1SV3	3	NF125-HV(3, 4P)	NV125-CV, NV125-SV			
ST-1SV4	4	NF125-SXV(3, 4P)	NV125-HV			
ST-1HV2	2	NF125-HV(2P), NF125-SXV(2P)	—			
ST-2SV2	2	NF125-LXV, NF125-HXV NF250-SXV, NF250-LXV, NF250-HXV NF125-SEV, NF125-HEV, NF125-RGV NF125-SGV, NF125-LGV, NF125-HGV NF160-SGV, NF160-LGV, NF160-HGV NF250-SGV, NF250-LGV, NF250-HGV NF250-CV, NF250-SV NF250-LGV/HGV, NF250-HV NF250-SEV, NF250-RGV NF250-HEV, NF125-SGV/HGV NF125-LGV, NF160-SGV NF160-LGV/HGV	—	sets	★Bar studs ●Bar studs (with insulating tube) (2-pole: 4 pcs, 3-pole: 6 pcs, 4-pole: 8 pcs) ●Bolts and nuts	
ST-2SV3	3		NV125-SEV, NV125HEV NV250-CV, NV250-SV NV250-HV, NV250-SEV NV250-HEV			
ST-2SV4	4					
ST-4SW2	2	NF400-CW, NF400-SW NF400-SEV, NF400-HEW NF400-REW	—		★Bar studs ●Insulating bases (2-pole: 4 pcs, 3-pole: 6 pcs, 4-pole: 8 pcs) ●Bar studs (2-pole: 4 pcs, 3-pole: 6 pcs, 4-pole: 8 pcs) ●Mounting screws, bolts and nuts	
ST-4SW3	3		NV400-CW, NV400-SW NV400-SEW NV400-HEW NV400-REW			
ST-4SW4	4			sets		
ST-6SW2	2	NF630-CW, NF630-SW NF630-SEW, NF630-HEW NF630-REW	—			
ST-6SW3	3		NV630-CW, NV630-SW NV630-SEW, NV630-HEW			
ST-6SW4	4					
ST-8SW2	2	NF800-SDW, NF800-CEW NF800-SEW, NF800-HEW NF800-REW	—	sets	★Bar studs ●Insulating base (2 pcs) ●Bar studs (2-pole: 4 pcs, 3-pole: 6 pcs, 4-pole: 8 pcs) ●Mounting screws, bolts and nuts	
ST-8SW3	3		NV800-SEW, NV800-HEW			
ST-8SW4	4					

Table 5-4 Plug-in type terminal blocks (PM)

Type name	Number of poles	Applicable models	Set of order	Major included parts
PMDN-05SV2L	2P	NF32-SV NF63-CV/SV/HV (3A-50A)	sets	Plug-in type terminal block (1 pc) Crip terminals (2-pole: 4pcs, 3-pole: 6 pcs, 4-pole: 8 pcs)
PMDN-05SV3L	3P	NF32-SV NF63-CV/SV/HV (3A-50A) NV32-SV NV63-CV/SV/HV (5A-50A)		
PMDN-05SV4L	4P			
PMDN-05SV2H	2P	NF63-CV/SV/HV (60A, 63A)		
PMDN-05SV3H	3P	NF63-CV/SV/HV (60A, 63A) NV63-CV/SV/HV (60A, 63A)		
PMDN-05SV4H	4P			
PMDN-1SV2	2P	NF125-CV/SV	sets	Plug-in type terminal block (1 pc) Crip terminals (2-pole: 4 pcs, 3-pole: 6 pcs, 4-pole: 8 pcs)
PMDN-1HV2	2P	NF125-HV/SXV		
PMDN-1SV3	3P	NF125-CV/SV/HV/SXV NV125-CV/SV/HV		
PMDN-1SV4	4P			
PMDN-1UV2	2P	NF125-UV	sets	Plug-in type terminal block (2 pc) Crip terminals (2-pole: 4pcs, 3-pole: 6 pcs)
PMDN-1UV3	3P			
—	4P			
PMDN-2SV2	2P	NF125-SEV/HEV/SGV/LGV/HGV/LXV/HXV NF160-SGV/LGV/HGV NF250-CV/SV/HV/SEV/HEV/SGV/LGV/HGV/SXV/LXV/HXV NV125-SEV/HEV NV250-CV/SV/HV/SEV/HEV	sets	Plug-in type terminal block (1 pc) Plug-in type barriers (2-pole: 2 pcs, 3-pole: 4 pcs, 4-pole: 6 pcs) Tulip terminals (2-pole: 4 pcs, 3-pole: 6 pcs, 4-pole: 8 pcs)
PMDN-2SV3	3P			
PMDN-2SV4	4P			
PMDN-2SV2	2P	NF125-RGV, NF250-RGV		
PMDN-2SV3	3P			
PMDN-2UV2	2P	NF250-UV	sets	Plug-in type terminal block (2 pc) Plug-in type barriers (2-pole: 2 pcs, 3-pole: 4 pcs) Tulip terminals (2-pole: 4pcs, 3-pole: 6 pcs)
PMDN-2UV3	3P			
—	4P			
PMDN-4SW2	2P	NF400-CW/SW	sets	Plug-in type terminal block (2 pcs) Plug-in type barriers (4 pcs) Tulip terminals (3-pole: 6 pcs)
PMDN-4SW3	3P	NF400-CW/SW/SEW NV400-CW/SW/SEW		
	3P	NF400-HEW/REW NV400-HEW/REW		
PMDN-4SW4	4P	NF400-SW/SEW NV400-SEW		
	4P	NF400-HEW		
PMDN-8SW2	2P	NF800-SDW	sets	Plug-in type terminal block (2 pcs) Tulip terminals (3-pole: 6 pcs)
PMDN-8SW3	3P	NF800-CEW/SEW NV800-SEW		
	3P	NF800-HEW/REW NV800-HEW		
PMDN-8SW4	4P	NF800-SEW		
	4P	NF800-HEW		

Note In addition to the circuit breakers shown above, 4-pole and 2-pole circuit breakers are available. We are ready to manufacture such circuit breakers to order. Please consult us.

3. Standard Tightening Torque

Rear
<Round stud>

Fig. 1

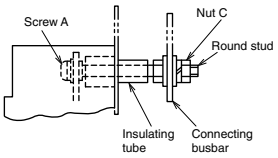

<Bar stud>

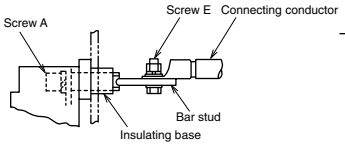

Fig. 2

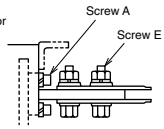

Fig. 3

Plug-in
<Screw terminal>

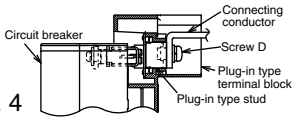

Fig. 4

<Bar stud>

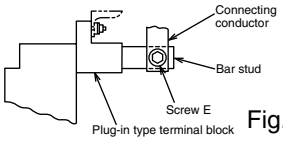

Fig. 5

Table 5-5 Standard tightening torque (*1)

Tightening torque N·m

Model / Connection type		Rear								Plug-in			
		Round stud				Bar stud				Screw terminal		Bar stud	
		Fig.1				Fig. 2, Fig.3				Fig.4		Fig.5	
MCCB	ELCB	Screw A		Nut C		Screw A		Screw E		Screw D		Screw E	
		Size	Tightening torque	Size	Tightening torque	Size	Tightening torque	Size	Tightening torque	Size	Tightening torque	Size	Tightening torque
NF30-CS	–	M4×0.7	1	M6	2	–	–	–	–	–	–	–	–
NF32-SV, NF63-CV NF63-SV, NF63-HV	NV32-SV, NV63-CV NV63-SV, NV63-HV	M4×0.7	1	M6	2	–	–	–	–	M6	3	–	–
NF125-CV, NF125-SV, NF125-SXV NF125-HV, NF125-UV	NV125-CV, NV125-SV NV125-HV	–	–	–	–	M6	4	M8	12	M8	6	–	–
NF125-LXV, NF125-HXV NF125-SEV, NF125-HEV, NF125-RGV NF250-SXV, NF250-LXV, NF250-HXV NF250-CV, NF250-SV, NF250-HV, NF250-SEV NF250-HEV, NF250-RGV, NF250-UV NF250-LGV/HGV, NF250-RGV, NF125-SGV/HGV NF125-LGV, NF160-SGV, NF160-LGV/HGV NF125-SGV, NF125-LGV, NF125-HGV NF160-SGV, NF160-LGV, NF160-HGV NF250-SGV, NF250-LGV, NF250-HGV	NV125-SEV, NV125-HEV NV250-CV, NV250-SV NV250-HV, NV250-SEV NV250-HEV	–	–	–	–	M6	10	M8	12	–	–	M8	12
NF400-CW, NF400-SW, NF400-SEW NF400-HEW, NF400-REW NF400-UEW (3P)	NV400-CW, NV400-SW NV400-SEW, NV400-HEW NV400-REW	–	–	–	–	M8	20	M12	45	–	–	M12	45
NF400-UEW (4P)	–	–	–	–	–	M10	30	M12	45	–	–	M12	45
NF630-CW, NF630-SW, NF630-SEW NF630-HEW, NF630-REW	NV630-CW, NV630-SW NV630-SEW NV630-HEW	–	–	–	–	M8	20	M12	45	–	–	M12	45
NF800-CEW, NF800-SDW NF800-SEW, NF800-HEW, NF800-REW NF800-UEW (*2)	NV800-SEW NV800-HEW	–	–	–	–	M10	30	2-M12	45	–	–	2-M12	45
NF1000-SEW NF1250-SEW	–	–	–	–	–	4-M8	12	2-M12	45	–	–	2-M12	45
NF1600-SEW	–	–	–	–	–	4-M8	12	4-M10	25	–	–	–	–

Notes *1 The appropriate range of tightening torque is ±20% of each value (standard tightening torque) shown in the above table. Please refer to the supplied assembly manual and instruction manual for more information.
*2 The plug-in type is not available.

4. Crimp Terminal Type

As the terminals in ▭, commercially available crimp terminals can be used. Please purchase the terminals at an electric material store.
For others, the crimp terminals for MCCB must be used. Place an order with us.
For the connection types shown in Fig. a and Fig. b, only crimp terminals will be delivered.

Table 5-6 List of applicable crimp terminals

Frame (A)	Nominal sectional area mm²		2	5.5	8	14	22
	Allowable current (600 V, IV wire at 30°C, not in conduit) (*4)		27A	49A	61A	88A	115A
	Size of mm²		1.04 to 2.63	2.63 to 6.64	6.64 to 10.52	10.52 to 16.78	16.78 to 26.66
	Model: MCCB	Model: ELCB					
30 50 100	BH-P	–	R-2-5	R-5.5-5	R-8-5	R-14-5	BH-22 (L330T459-23)
	BH-P100	–			R-8-8	R-14-8	R-22-8
30 32 50 60 63	NF30-CS, NF32-SV, NF63-CV*, NF63-SV* NF63-HV* *50A or below	NV32-SV, NV63-CV*, NV63-SV* NV63-HV* *50A or below	R-2-5 *(R-2-6)	R-5.5-5 *(R-5.5-6)	R-8-5	R-14-5	JST22-S5 BH-22 (L330T459-23)
	NF63-CV, NF63-SV, NF63-HV 60, 63A	NV63-CV, NV63-SV, NV63-HV 60, 63A	R-2-8	R-5.5-8	R-8-8	R-14-8	R-22-8
125	–	–	R-2-5 (R-2-6)	R-5.5-5 (R-5.5-6)	R-8-5	R-14-5	JST22-S5 (L330T459-23)
	NF125-CV, NF125-SV, NF125-HV, NF125-UV NF125-SXV 60A or more	NV125-CV, NV125-SV, NV125-HV 60A or more	R-2-8	R-5.5-8	R-8-8	R-14-8	R-22-8
125 225 250	NF125-LXV, NF125-HXV NF250-SXV, NF250-LXV, NF250-HXV NF125-SEV, NF125-HEV, NF125-RGV NF250-CV, NF250-SV, NF250-HV, NF250-UV NF250-SEV, NF250-HEV, NF250-RGV NF125-SGV, NF160-SGV, NF250-SGV NF125-LGV, NF160-LGV, NF250-LGV NF125-HGV, NF160-HGV, NF250-HGV	NV125-SEV, NV125-HEV NV250-CV, NV250-SV, NV250-HV NV250-SEV, NV250-HEV				R-14-8	R-22-8
400 600 630	NF400-CW, NF400-SW, NF400-SEW NF400-HEW, NF400-REW, NF400-UEW NF630-CW, NF630-SW, NF630-SEW NF630-HEW, NF630-REW	NV400-CW, NV400-SW NV400-SEW, NV400-HEW NV400-REW, NV630-CW NV630-SW, NV630-SEW NV630-HEW					
800 1000 1200 1250	NF800-CEW, NF800-SEW, NF800-HEW NF800-REW, NF800-UEW, NF800-SDW NF1000-SEW, NF1250-SEW	NV800-SEW, NV800-HEW					

● **Reference drawings of connection types**

Method of connecting directly to terminal(s) of body

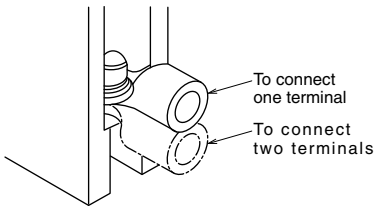

(Fig. a)

Method of connecting to front bar terminal

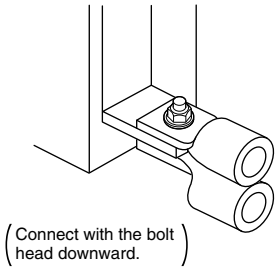

(Fig. b)

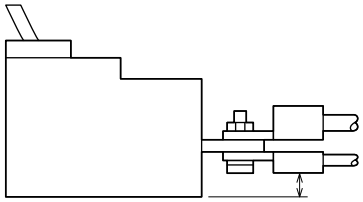

Carefully check the insulating distance between the connecting bus bar, crimp terminal and tightening bolt and the ground and the phase-to-phase insulating distance.

<Explanation of abbreviations>
R ····· Product specified by JIS
CB ····· Product specified by JEM 1399
AMP ····· Product made by Nippon AMP
JST ····· Product made by J.S.T. Mfg. Co., Ltd.
NTK ····· Product made by Nippon Tanshi Co., Ltd.
NTM ····· Product made by Nichifu Co., Ltd.
DST ····· Product made by Daido Solderless Terminal Mfg. Co., Ltd.

38	60	100	150	200	325	Crimp terminal tightening screw			Remarks	Reference drawing of connection type
162A	217A	298A	395A	469A	650A	Screw size	Tightening torque N • m	Shape		
26.66 to 42.42	42.42 to 60.57	96.3 to 117.2	117.2 to 152.05	192.6 to 242.27	242.27 to 325					
						M5	2 to 3	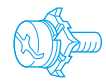 M5 • M6	When connecting two crimp terminals, set the terminals as shown below if the *-marked terminals are used. 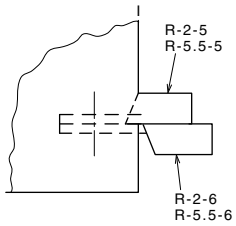	(Fig. a)
AMP #322870 JST 38-S8 NTK R38-8S	1AF-60 (L330T459-12) CB60-S8					M8	5 to 7			
						M5	2 to 3	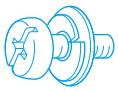 M8		
AMP #322870 JST 38-S8 NTK R38-8S	1AF-60 (L330T459-12) CB60-S8					M8	5 to 7			
						M5	2 to 3	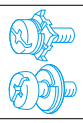 M5 M8		
AMP #322870 JST 38-S8 NTK R38-8S	1AF-60 (L330T459-12) CB60-S8					M8	5 to 7			
R-38-8	R-60-8	2AF (LN300T920-20) CB100-S8	2CR-150(*1) (LN300T920-21) (*1)CB150-S8			M8	8 to 13		When using 2AF, use a crimp tool having a nominal size of 100.	
R-38-12	R-60-12	R-100-12	R-150-12	R-200-12	JST325-12	M12	40 to 50		Fit to a front type bar terminal. Up to two pieces can be fitted to one terminal.	(Fig. b)
R-38-12	R-60-12	R-100-12	R-150-12 RD150-12 SD150-12	R-200-12 RD200-12 SD200-12	JST325-12 RD325-12 SD325-12					

Notes *1 When using 2CR-150 or CB150-S8, insulate it from TC-S with insulating tube or tape. When using CB150-S8 for a 2- or 3-pole circuit breaker, TCL-2SV3L is applicable.
*2 On the power supply side, pan-head screws M5 are used.
*3 When tightening a terminal screw without connecting a wire, crimp terminal or bar, tighten the screw to 20 to 30% of the torque shown in the above table (to prevent damage to the threads).
*4 The table shows not the allowable current values of circuit breakers, but those of wires applicable to crimp terminals.
Remark: 1. For the crimp terminals for UL listed circuit breakers, refer to the page of the characteristics and external dimensions of UL 489 Listed Circuit Breakers.

● Dimensions of crimp terminals <extracted from catalog of JST>

Part number	Shape	Applicable screw size	External dimensions						Applicable wire mm²
			ϕd2	B	L	F	E	Thickness	
R2-5	A	M5	5.3	9.5	16.8	7.3	4.8	0.8	1.04 to 2.63
R2-6		M6	6.4	12.0	21.8	11.0			
R2-8		M8	8.4						
R5.5-5	A	M5	5.3	9.5	19.8	8.3	6.8	1.0	2.63 to 6.64
R5.5-6		M6	6.4	12.0	25.8	13.0			
R5.5-8		M8	8.4	15.0	28.0	13.7			
R8-5	A	M5	5.3	12.0	23.8	9.3	8.5	1.2	6.64 to 10.52
8-5NS		M5	5.3	9.0	22.3				
R8-6		M6	6.4	12.0	23.8				
R8-8		M8	8.4	15.0	29.8	13.8			
8-5SC-9		M5	5.3	9	23.8	9.3	8.5	1.2	6.64 to 10.52
R14-5	A	M5	5.3	12.0	29.8	13.3	10.5	1.5	10.52 to 16.78
14-5NS		M5	5.3	9.0	28.3				
R14-6		M6	6.4	12.0	29.8				
R14-8		M8	8.4	16.0	32.8	14.5			
L330T459-23	A	M5	5.3	12.0	30.0	12.0	12.0	1.8	16.78 to 26.66
22-5NS		M5	5.3	9.5	28.7				
22-S6		M6	6.4	12.0	30.0				
R22-8		M8	8.4	16.5	33.7	13.5			
R22-12		M12	13.0	22.0	42.5	19.5			
38-S8	A	M8	8.4	15.5	38.0	16.0	14.0	1.8	26.66 to 42.42
R38-8		M8	8.4	22.0	42.7	17.7			
R38-12		M12	13.0						
L330T459-12	A	M8	8.4	16.0	46.7	20.7	18.0	2.0	42.42 to 60.57
R60-8		M8	8.4	22.0	49.7	20.7			
R60-12		M12	13.0						
LN300T920-20	B	M8	8.4	22.5	51.0	20.0	21.0	2.6	96.3 to 117.2
R100-12	A	M12	13.0	28.5	55.6	20.4			

Part number	Shape	Applicable screw size	External dimensions						Applicable wire mm²
			ϕd2	B	L	F	E	Thickness	
LN300T920-21	B	M8	8.4	22.5	70.0	33.0	27.0	3.2	117.2 to 152.05
L330T402-8		M8	8.4	25.3	61.5	23.0			
R150-12	A	M12	13.0	36.0	66.0	21.0			
R200-12	A	M12	13.0	44.0	78.0	24.5	31.5	4.0	192.6 to 242.27
325-12	A	M12	13.0	50.5	88.0	33.5	35.5	4.5	242.27 to 325
CB60-S8	B	M8	8.4	16.0	46.7	20.7	18.0	2.0	42.42 to 60.57
CB100-S8			8.4	22.0	52.5	20.5	21.0	2.6	96.3 to 117.2
CB150-S8			8.4	22.0	61.0	23.0	27.0	3.2	117.2 to 152.05

Part number	Shape	Applicable screw size	External dimensions							Applicable wire mm²
			ϕd2	B	L	F	E	N	Thickness	
RD60-12	C	M12	14.0	22.0	89.0	20.0	18.0	40	2.0	42.42 to 60.57
RD100-12			14.0	28.5	95.5	20.3	21.0		2.6	96.3 to 117.2
RD150-12			14.0	36.0	106.0	21.0	27.0		3.2	117.2 to 152.05
RD200-12			14.0	44.0	116.5	23.0	31.5		4.0	192.6 to 242.27
RD325-12			14.0	50.5	123.8	23.0	35.5		4.5	242.27 to 325
SD150-12	C	M12	14.0	36.0	107.0	29.0	28.0	32	3.2	117.2 to 152
SD200-12				44.0	108.0	36.0	32.0		4.0	192.6 to 242.2
SD325-12				50.5	125.0	38.0	37.0		4.5	242.2 to 325

Shape A
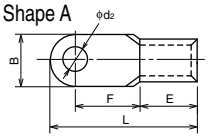

Shape B
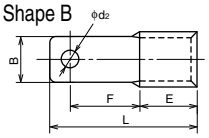

Shape C
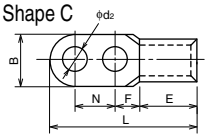

5. Busbar

The size of the conductor can be connected is shown on the outline drawing of each model. The following special busbars are available. Use them as needed. When using any busbar, isolate it from the bare busbar on the circuit breaker power supply side with an insulating barrier.

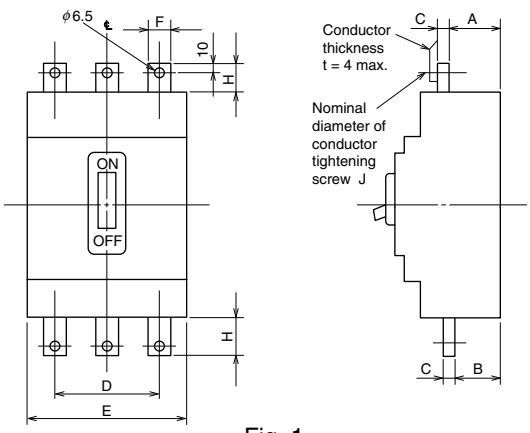

Fig. 1

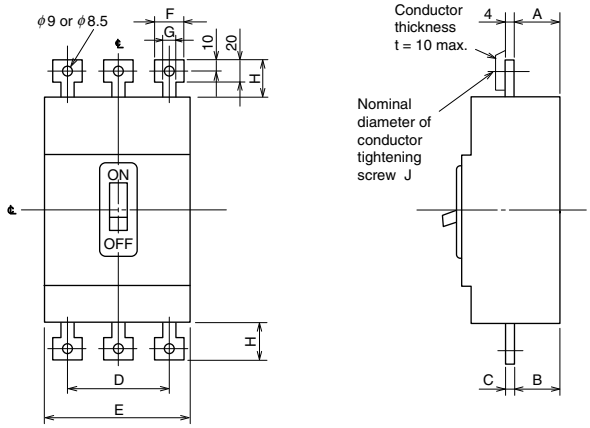

Fig. 2

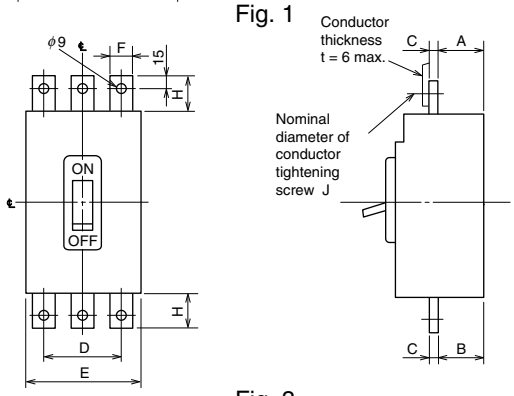

Fig. 3

Table 5-7 Table of variable dimensions

Type name	Applicable models		Outline and dimentions	Busbar									
	MCCB	ELCB		Fig.	A	B	C	D	E	F	G	H	J
FB-05SV	NF32-SV NF63-CV (50A or below) NF63-SV (50A or below) NF63-HV (50A or below)	NV32-SV NV63-CV (50A or below) NV63-SV (50A or below) NV63-HV (50A or below)	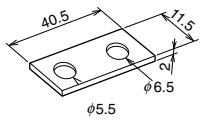	1	24	24	2	50	75	11.5	–	25	M5x0.8
FB-1SV	NF125-CV, NF125-SV NF125-HV, NF125-UV NF125-SXV	NV125-CV NV125-SV NV125-HV	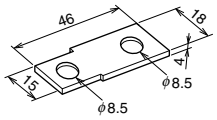	2	24	24	4	60	90	18	15	29	M8
FB-2SV	NF125-LXV, NF125-HXV NF250-SXV, NF250-LXV, NF250-HXV NF125-SEV NF125-HEV, NF125-RGV NF250-CV, NF250-SV, NF250-HV NF250-UV, NF250-SEV NF250-HEV, NF250-RGV NF125-SGV/LGV/HGV NF160-SGV/LGV/HGV NF250-SGV/LGV/HGV	NV125-SEV NV125-HEV NV250-CV, NV250-SV NV250-HV, NV250-SEV NV250-HEV	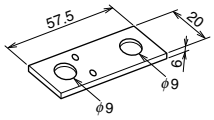	3	24	24	6	70	105	20	–	37	M8

6. Insulation Distance on Power Source Side

●Basic concept

Insulation distance (distance indicated in standards)

Be sure to at least secure the insulation distances (spatial distance and creeping distance) specified by the codes and standards of the relevant equipment and facilities where the circuit breakers are installed.
It is recommended that insulation barriers and insulation tape be used to enhance the electrical insulation between bare-live parts and between bare-live parts and ground to avoid accidents otherwise caused by a loose metal piece, conductive dust, abnormal surge voltage in the circuit or a similar event so as to improve the reliability of panels.

Arc Space (insulation space)

At the exhaust outlet side of breaker, arc space is necessary. When the actual load circuit is opened, especially when a large current such as overload or short-circuit is interrupted, ionized gas is emitted from the exhaust outlet. This gas can cause a short circuit between bare, live parts such as busbars, and also can cause grounding faults between conductive installation metal panels.
Therefore, it is important to secure enough arc space at the exhaust outlet side of the breaker and to strengthen insulation of parts exposed to the gas. In addition, securing enough space at the front of the exhaust outlet is necessary, because when the gas emission is blocked, failures such as deterioration of breaking performance can be caused.

●Insulation required part

With regard to insulation of bear, live parts of the line side of the breaker, please make sure to insulate at least C part C indicated in the diagram above with insulation tape, a tube or a terminal cover.

①A : Distance from the circuit breaker to the ceiling plate
②B1 : Distance from the circuit breaker to the uncovered conducting part of the upper circuit breaker terminal (front connection)
③B2 : Distance from the lower circuit breaker to the end face of the upper circuit breaker (rear connection)
④D1 : Distance from the side of the breaker to the side plate
⑤C : Insulated length of the power source terminal of the circuit breaker (front connection)
Please secure insulation using insulating tape, insulating tubing, insulation barrier, or a terminal cover, between bare charge parts within this size range. Please refer to a table a necessary size must.
◇When using insulation tape and insulation tubing together with insulation barriers and terminal covers, make them overlap with the other by at least 10 mm.
◇For the models with insulation barriers supplied as standard, please make sure to use the barriers.
a : clearance specified in standard
⑥D2 : Side-to-side spacing of breakers
While the circuit breakers can basically be installed together without a clearance in between, be sure to observe the following instructions.
◇It is desirable to install an insulation barrier between the adjacent circuit breakers or insulate the bare-live parts considering the effect of cutoff gas.
◇Be sure to secure the insulation distance (dimension a) as the minimum, indispensable requirement.
◇With a leakage circuit breaker and a leakage alarm circuit breaker installed in close contact with the other, a current of 2,500A or higher flowing through one of the circuit breakers could cause the other to operate falsely.
Be sure to secure a distance of at least 50 mm in between.
◇A circuit breaker of 400-ampere frame or larger with an SHT or a UVT could operate falsely if a current of 50 kA or higher flows through the adjacent circuit breaker.
Be sure to secure a distance of at least 50 mm in between.

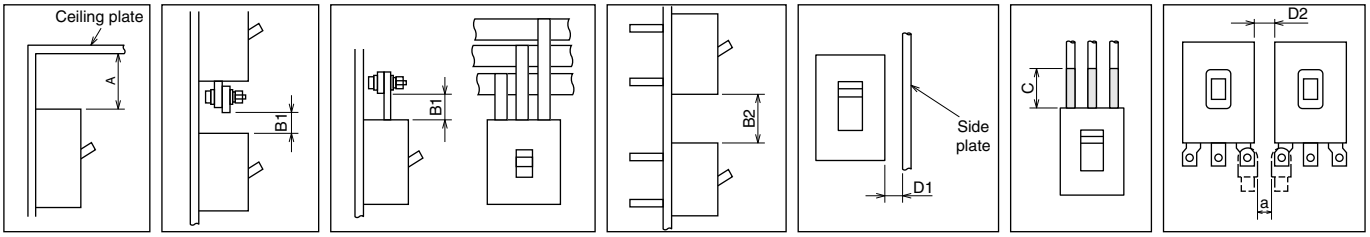

Table 5-8 Insulation distance (mm) (440VAC or below) *Figures in parentheses are for 230VAC or below.

Class • Series	Model		Ceiling plate			Vertical spacing		C	Horizontal spacing
			A			B1, B2			
	MCCB	ELCB	Uncovered metal Plate: Without terminal cover	Uncovered metal Plate: With terminal cover	Insulated plate, coated plate	Without terminal cover	With terminal cover		D1
C • S • H • R • MB	NF30-CS	–	10	10	10	20	20	(*1)	20
	NF32-SV, NF63-CV	NV63-CV	5	5	5	20	20	(*1)	20
	NF63-SV, NF63-HV	NV32-SV, NV63-SV, NV63-HV	10	10	10	30	30	30	25
	NF125-CV	NV125-CV	50(30)	40(30)	10	50	50	(*1)	25
	NF125-SV	NV125-SV	50(10)	30(10)	10	50	50	50	25
	NF125-HV, NF125-SXV	NV125-HV	50	40	40	80	80	80	40
	NF250-CV	NV250-CV	40	40	40	50	50	50	50
	NF250-SXV NF125-SEV, NF250-SV, NF250-SEV NF125-SGV, NF160-SGV, NF250-SGV	NV125-SEV, NV250-SV, NV250-SEV	70(40)	40	40	70(50)	50	70(50)	50
	NF125-LXV, NF125-HXV NF250-LXV, NF250-HXV NF125-HEV, NF250-HV, NF250-HEV NF125-LGV, NF160-LGV, NF250-LGV NF125-HGV, NF160-HGV, NF250-HGV	NV125-HEV, NV250-HV, NV250-HEV	80	60	60	80	80	80	60
	NF400-CW	NV400-CW	60	60	60	60	60	60	40
	NF400-SW, NF400-SEW	NV400-SW, NV400-SEW	70	70	70	70	70	70	70
	NF400-HEW, NF400-REW	NV400-HEW, NV400-REW	200	200	200	200	200	200	150
	NF630-SW, NF630-SEW, NF630-CW	NV630-CW, NV630-SW, NV630-SEW	70	70	70	70	70	70	70
	NF630-HEW, NF630-REW	NV630-HEW	200	200	200	200	200	200	150
	NF800-SEW, NF800-CEW	NV800-SEW	80	80	80	80	80	80	80
	NF800-HEW, NF800-REW	NV800-HEW	200	200	200	200	200	200	150
	NF1000-SEW, NF1250-SEW NF1600-SEW	–	100	100	100	100	100	100	100
R • U	NF125-RGV, NF250-RGV	–	30 (*6)	30 (*6)	30 (*6)	50 (*9)	50 (*9)	50	5
	NF125-UV, NF250-UV	–	(*1)	(*1)	(*1)	(*1)	(*1)	(*1)	25
	NF400-UEW	–	70	70	70	70	70	70	70
	NF800-UEW	–	80	80	80	80	80	80	80
BH	BH-K, BH-K100	–	(*1)		(*1)	(*1)		(*1)	20
UL	NF225-CWU	–	(40)	–	(40)	(50)	–	(50)	(50)
	NF50-SVFU	–	10 (*6)	10 (*6)	10 (*6)	20 (*7)	20 (*7)	30	10
	NF100-CVFU	–	50(25)	40(25)	10	50	50	50	25(15)
	NF125-SVU(*4)	–	40(10)	30(10)	10	50	50	50	25(20)
	NF125-HVU(*5)	–	40	40	40	80	80	80	25(20)
	NF250-SVU(*4)	–	40	40	40	70(50)	50	70(50)	50(20)
	NF250-HVU(*5)	–	40	40	40	80	80	80	50(20)
	NF400-SWU, NF400-HWU(*5)	–	70	70	70	70	70	70	70
	NF630-SWU, NF630-HWU(*5)	–	70	70	70	70	70	70	70

Remark: 1. The table shows the dimensions in the case of the use of a large terminal cover (TC-L).
Notes *1 It is not necessary to provide an insulation distance (an arc space) on the power supply side. However, if a grounding metal piece or the like comes in close contact with the terminal, be sure to completely insulate the terminals or the bare-live parts of the cable conductors.
*2 At more than 440 V AC, the distance shall be 10 mm.
*3 For 480Y/277V AC.
*4 For 480V AC.
*5 For 600Y/347V AC.
*6 An exhaust port is provided also on the circuit breaker load side. Secure the dimension A both on the power supply side and on the load side.
*7 When any of the circuit breakers NF125-RGB to NF250-RGV is used on the upstream side, an exhaust port is provided also on the circuit breaker load side. Secure the larger distance of the dimension B1 of NF125-RGV, NF250-RGV or NF50-SVFU and the dimension B1 of the downstream circuit breaker.

7. Effect of Installation Orientation

Installation orientation does not affect the operating characteristics of circuit breakers of electronic or thermo-magnetic operation types. However, the installation orientation affects the operating current of fully magnetic type circuit breakers as the iron core in the oil dash pot is under gravitational force.
It is generally suggested they be installed vertically.

●Hydraulic-magnetic (The same applies to other models of hydraulic-magnetic type.)

MCCB	
Class	Model
C	NF30-CS

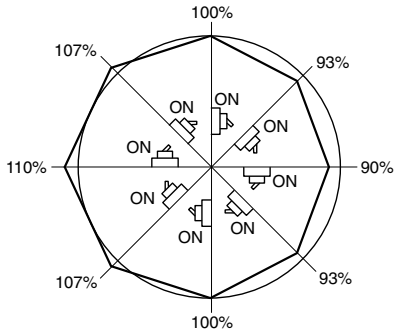

Rate of change of rated current by mounting angle

8. Connection of Line and Load

The standard wiring of line and load on the circuit breaker is as shown in (a) normal connection on the right.
Avoid the wiring shown in (b) reverse connection. This may lead to a decrease in breaking performance.
However, the reverse connection is allowed for the following models (excluding MDU breakers).

(a) Normal connection (b) Reserve connection

Connection methods

NF-C, NF-S, NF-H, NF-R and NF-U class BH-P, CP30-BA, NV-C, S, H and R class of 400 to 800AF, NF100-CVFU, NF125-SVU, NF125-HVU, NF250-SVU, NF250-HVU	Reverse connection is allowed for the standard models.

6

Accessories

1 Internal Accessories 102

1) Internal Accessories 102
2) Kinds of Internal Accessories 103
3) Operations and Ratings of Switches 103
4) Maximum Number of Internal Accessories 104
5) Cassette Type Accessories 109
6) Shunt Trip (SHT) 111
7) Undervoltage Trip (UVT) 112
8) Lead Wire Drawing 114
9) Lead Wire Terminal Block 114
10) Test Button Module (TBM) 115
11) Pre-Alarm Module (PAL) 116

2 External Accessories 117

1) F-type Operating Handle (Breaker Mount Type) 117
2) V-type Operating Handle (Door Mount Type) 119
3) Terminal Covers 121
4) Insulating Barriers 124
5) Handle Lock Devices, Lock Covers, Auxiliary Handles, Card Holders 127
6) Mechanical Interlocks (MI) 129
7) Boxes for Circuit Breakers and Boxed Circuit Breakers 130
8) Electrical Operated Circuit Breakers and Electrical Operation Devices 133
9) Distribution Board Mounting Parts, Lock Covers and Handle Caps 136
10) IEC 35-mm Rail Mounting Adapters 137

1. Internal Accessories

The accessories to be installed in circuit breakers include the followings. For the numbers of the accessories which can be installed, refer to the tables on pages 104 to 108. The standard internal accessories have lead wires (450 mm long) drawn out. (However, some of Models UVT and TBM have vertical lead wire terminal blocks as standard.)
When circuit breakers are installed side by side, keep a space of 8 mm or more for lead wires between the circuit breakers. (Models with lead wires drawn out toward load and models with lead wire grooves in the side faces can be installed in close contact.)

SHT (Shunt trip)

Device to electrically trip a circuit breaker from a distance. The allowable operating voltage range is 70 to 110% of the rated voltage. (JIS C 8201-2-1 Ann.1, Ann.2)

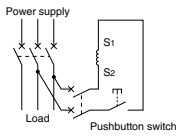

Connection diagram

AL (Alarm switch)

Switch to electrically display the tripping status of circuit breaker

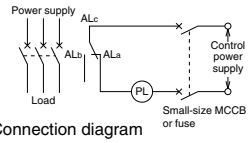

Connection diagram

AX (Auxiliary switch)

Switch to electrically display the ON-OFF status of circuit breaker

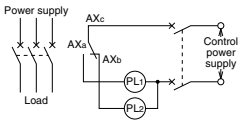

Connection diagram

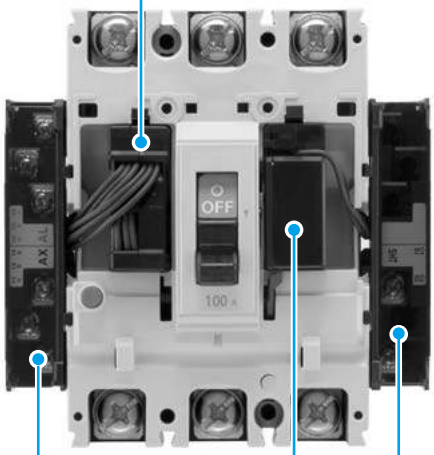

UVT (Undervoltage trip)

Device to automatically trip a circuit breaker when the voltage drops. The operating voltage is 70 to 35% of the UVT rated voltage. (JIS C 8201-2-1 Ann.1)
When the voltage recovers at least to 85% or more, the circuit breaker can be turned on after the device is manually reset.

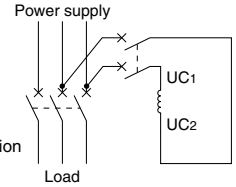

Connection diagram

SLT (Lead wire terminal block)

Terminals for connecting with internal accessories. The terminal block will be manufactured to order. For the detailed dimensions, refer to pages 114 and 115. (The dimensions of SLT slightly vary depending on the number of installed accessories and the model.)
However, circuit breakers with a frame size of 400A and above having an electrical operation device are normally provided with SLT.

TBM (Test button module)

Unit to perform test under voltage from a distance. TBMs can be connected in parallel. (The standard TBMs are provided with SLT. In the case of the flush plate type, the external dimensions are partially different from those of the standard type.)

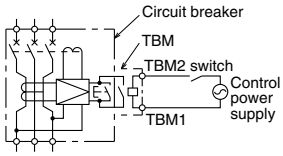

TBM circuit diagram

2. Kinds of Internal Accessories

Table 6-1

Accessory name		Nameplate (sample)	Accessory name		Nameplate (sample)
AL	**Alarm switch**		**EAL**	**Earth leakage trip alarm switch**	
AX	**Auxiliary switch**				
SHT	**Shunt tripping device**		**TBM**	**Test button module**	
UVT	**Undervoltage tripping device**				

3. Operations and Ratings of Switches

Table 6-2 Operations of AL switch

Status of circuit breaker	Contact status of AL switch
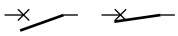 Off or On	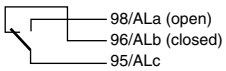 98/ALa (open) 96/ALb (closed) 95/ALc
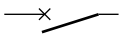 Trip	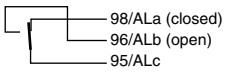 98/ALa (closed) 96/ALb (open) 95/ALc

* The terminal numbers 98/ALa, 96/ALb and 95/ALc may vary depending on the number of installed switches and the installation poles.

Table 6-3 Operations of AX switch

Status of circuit breaker	Contact status of AX switch
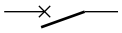 Off or Trip	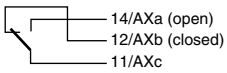 14/AXa (open) 12/AXb (closed) 11/AXc
On	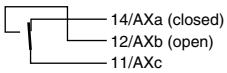 14/AXa (closed) 12/AXb (open) 11/AXc

* The terminal numbers 14/AXa, 12/AXb and 11/AXc may vary depending on the number of installed switches and the installation poles.

Table 6-4 Ratings of AL and AX switches

Applied switch	AC			DC		
	Voltage V	Current A		Voltage V	Current A	
		Resistive load	Inductive load		Resistive load	Inductive load
A	(250)	(1)	(0.5)	(50)	(1)	(0.5)
	125	3	(1)	30	(2)	(1)
S	460	—	—	250	0.2	0.2
	250	3	2	125	0.4	0.4
	125	5	3	30	4	3
V	460	5	2	250	0.3	0.3
	250	10	10	125	0.6	0.6
	125	10	10	30	10	6

Remarks: 1. The ratings in parentheses do not conform to UL.
2. For the applied switches, refer to Tables 6-9-1 to 6-14-1.

4. Maximum Number of Internal Accessories

■MCCB and Motor Protection Breakers

Table 6-5 Table of maximum number of internal accessories

Handle of circuit breaker
Left pole → ← Right pole

●AL ○AX SHT or UVT
■PAL
→ Outgoing direction of lead wires

▭ are cassette type accessories. (Some of UVT are not provided with cassettes. Refer to page XXX for details.)

Model								
	C	NF30-CS	NF63-CV NF125-CV	NF63-CV NF125-CV NF250-CV		NF400-CW NF630-CW	NF800-CEW	
	S		NF32-SV NF63-SV NF125-SV	NF32-SV NF63-SV NF125-SV NF125-SXV NF125-SGV NF160-SGV NF250-SV NF250-SXV NF250-SGV	NF125-SEV NF250-SEV	NF400-SW NF400-SEW NF630-SW NF630-SEW	NF800-SEW NF800-SDW	NF1000-SEW NF1250-SEW NF1600-SEW
	L • H • R		NF63-HV	NF63-HV NF125-HV NF125-LXV NF125-HXV NF125-LGV NF125-HGV NF125-RGV NF160-LGV NF160-HGV NF250-HV NF250-LXV NF250-HXV NF250-LGV NF250-HGV NF250-RGV	NF125-HEV NF250-HEV	NF400-HEW NF400-REW NF630-HEW NF630-REW	NF800-HEW NF800-REW	
	U			NF125-UV NF250-UV		NF400-UEW(3P)	NF400-UEW(4P) NF800-UEW	
Number of poles		2 or 3 poles	2 poles	2, 3 or 4 poles	3, 4 poles	2, 3 or 4 poles	2, 3 or 4 poles	2, 3 or 4 poles
AL and AX (standard) switches		S						V
Accessory								
AL		(*3)		❶ ❷	❶ ❷		(*7)	
AX		(*3)	① ②	① ② ③	① ② ③	① ② ③ ④	①⑤ ②⑥ ③ ④ (*7)	① ② ⑤ ③ ④ ⑥
SHT or UVT			(*1)	(*1)(*5)	(*1)(*5)	(*1) (*6)	(*1) (*6)	(*1)
AL + AX		(*3) 3-pole product only		(*2) ❶ ❷ ① ②	(*2) ❶ ❷ ① ②	(*7)	(*7)	
AL + SHT or UVT				(*1)	(*1)	(*1) (*6) (*7) (*8)	(*1) (*6) (*7) (*8)	(*1)
AX + SHT or UVT				(*1) ① ②	(*1) ① ②	(*1) (*6) (*7) (*8) ③ ① ②	(*1) (*6) (*7) (*8) ①③ ②④ ⑤ ③ ④ ① ②	(*1)
AL + AX + SHT or UVT				(*1)	(*1)	(*1) (*6) (*7) (*8)	(*1) (*6) (*7) (*8)	(*1)
PAL (contact output)					(*4)	(*9) Option for NF400-SEW, HEW, REW and UEW and NF630-SEW, HEW and REW	(*9) Option for NF800-CEW, SEW, HEW and REW and NF800-UEW	(*9) Option for NF1000-SEW and NF1250-SEW and NF1600-SEW

Notes *1 When UVT is provided, the UVT voltage module will come in the vertical lead wire terminal block type. (SHT does not have a voltage module.)
*2 The second AX can be installed in place of the AL on the left pole side. When placing an order, specify the incorporation of the switches in the body.
*3 Although the lead wires are normally drawn out laterally, those with lead wires drawn out toward load are available. (Only for front connection type)
*4 PAL (contact output) can be installed together with AL and AX on the left pole side. (It cannot be installed together with SHT or UVT.)
The standard type is provided with SLT. PAL control voltage (compatible with 100 to 200 V AC) is necessary.
*5 SHT and UVT can be installed on the left side.
*6 SHT and UVT are normally installed on the right pole side. If you intend to install them on the left pole side, specify so. (The reset preventing UVT must be installed on the left pole side.)
*7 In the case where three or more accessories are installed on the left pole side and AL, AX or AL and AX are installed on the pole on which SLT, SHT or UVT is installed, the SLT will be manufactured to order.
*8 When AL, AX or AL and AX are installed on the pole on which UVT is installed, the UVT voltage module must be installed separately.
*9 SLT is provided as standard. A control power supply (100 to 200 V AC) is required. (In this case, other internal accessories cannot be installed on the right pole side.)

Remarks: 1. For electrically operated automatic reset type circuit breakers having a frame size of 400A or above, the numbers of AL switches which can be installed are smaller by 1 than the values shown above.
2. The encircled numbers indicate the order of installation.

ELCB

Table 6-6 Table of maximum number of internal accessories

●AL ○AX SHT or UVT

Handle of circuit breaker
Left pole → ← Right pole

TBM → Outgoing direction of lead wires

are cassette type accessories.

Model			
C	NV63-CV NV125-CV NV250-CV	NV400-CW NV630-CW	
S	NV32-SV NV63-SV NV125-SV NV125-SEV NV250-SV NV250-SEV	NV400-SW NV400-SEW NV630-SW NV630-SEW	NV800-SEW
H • R	NV63-HV NV125-HV NV125-HEV NV250-HV NV250-HEV	NV400-HEW NV400-REW NV630-HEW	NV800-HEW
U			
Number of poles	2, 3, or 4 poles	3 poles	
Switch	S		
Accessory			
AL	●	● ●	● ● ● (*6)
AX	① ②	○ ○	○○ ○○ (*6)
AL + AX	● ○ (*2)	●○ ●○ (*6)	●○ ●○ (*6)
SHT or UVT	(*3)	(*5)	(*5)
AL + SHT or UVT		● (*4) (*5) (*6)	● ● (*4) (*5) (*6)
AX + SHT or UVT		○ (*4) (*5) (*6)	○ ○ (*4) (*5) (*6)
AL + AX + SHT or UVT		● ○ (*4) (*5) (*6)	●● ○○ (*4) (*5) (*6)
TBM	(*1)	(*1)	(*1)

Notes *1 The standard type is provided with SLT. Only in the case of 24 V DC, specify the control voltage.
*2 The second AX can be installed in place of the AL on the left pole side. When placing an order, specify the incorporation of the switches in the body.
*3 When UVT is provided, the UVT voltage module will come in the vertical lead wire terminal block type. (SHT does not have a voltage module.)
*4 When AL, AX or AL and AX are installed on the pole on which UVT is installed, the UVF voltage module must be separately installed.
*5 When the accessory is provided with UVT, the UVT voltage module has a vertical lead wire terminal block. The UVT is not provided with a cassette.
*6 SLT to be used when three or more accessories are installed on the left pole is manufactured to order.

Remarks: 1. The encircled numbers indicate the order of installation.
2. TBM can be installed regardless of the number of installed AL, AX, SHT and UVT.

UL 489 Listed Circuit Breakers

Table 6-7 Table of maximum number of internal accessories

Handle of circuit breaker — Left pole → ← Right pole

● AL ○ AX SHT or UVT TBM → Outgoing direction of lead wires

▭ are cassette type accessories.

Model / MCCB	NF50-SVFU NF100-CVFU	NF50-SVFU NF100-CVFU	NF125-SVU NF125-HVU NF250-SVU NF250-HVU	NF225-CWU	NF400-SWU NF400-HWU	NF630-SWU NF630-HWU			
ELCB							NV50-SVFU	NV50-SVFU NV100-CVFU	NV125-SVU NV125-HVU NV250-SVU NV250-HVU
Number of poles	2 poles	3 poles	2 or 3 poles	3 poles	3 poles	3 poles	2 poles	3 poles	3 poles
AL and AX (standard) switches	S								
Accessory									
AL	●	❶ ❷	❶ ❷	❶ ❷	● ●	(*4) ● ● ●		●	●
AX	① ②	① ② ③	① ② ③	① ②	① ② ③ ④	(*4) ①⑤ ②⑥ ③ ④		① ②	① ②
SHT or UVT	(*1) (*6)	(*1) (*3) (*6)	(*1) (*3)	(*1)	(*1) (*3)	(*1) (*3)		(*1) (*6)	(*1)
AL + AX	● ○	(*2) ❶ ❷ ① ②	(*2) ❶ ❷ ① ②	❶ ❷ ① ②	(*6) ●○ ●○	(*6) ●○ ●○		(*2) ● ○	(*2) ● ○
AL + SHT or UVT		(*1) (*6) ●	(*1) ●	(*1) ●	(*1) (*3) (*4) (*5) ● ● ●	(*1) (*3) (*4) (*5) ● ● ● ● ●			
AX + SHT or UVT		(*1) (*6) ① ②	(*1) ① ②	(*1) ○	(*1) (*3) (*4) (*5) ○ ○ ③ ① ②	(*1) (*3) (*4) (*5) ①③ ②④ ⑤ ③ ① ④ ②			
AL + AX + SHT or UVT		(*1) (*6) ●○ ○	(*1) ●○ ○	(*1) ●○ ○	(*1)(*3) (*4)(*5) ●○ ●○ ●○ ○	(*1)(*3) (*4)(*5) ●○ ●○ ●○ ●○			
TBM							(*7) ➡	(*7) ➡	(*7) ➡

Notes *1 When UVT is provided, the UVT voltage module will come in the vertical lead wire terminal block type. (SHT does not have a voltage module.)
*2 SHT cannot be installed.
*3 SHT and UVT are normally installed on the right pole side. If you intend to install them on the left pole side, specify so.
*4 In the case where three or more accessories are installed on the left pole side and AL, AX or AL and AX are installed on the pole on which SLT, SHT or UVT is installed, the SLT will be manufactured to order.
*5 When AL, AX or AL and AX are installed on the pole on which UVT is installed, the UVT voltage module must be installed separately.
*6 UVT of NF50-SVFU and NV50-SVFU are not provided with cassettes.
*7 The standard type is provided with SLT. Only in the case of 24 V DC, specify the control voltage.

Remarks: 1. The encircled numbers indicate the order of installation.
2. AL and AX for minute load can be manufactured to order. (These switches have been certified only by UL and CSA. They have not been certified by TUV.)

MDU Breakers

Table 6-8-1 Table of maximum number of internal accessories

● AL ○ AX ● AL for transmission with MDU ○ AX for transmission with MDU ⊠ SHT or UVT ⧗ TI

■ PAL → Outgoing direction of lead wires

Handle of circuit breaker

Left pole → ← Right pole

▭ are cassette type accessories.

Model / Number of poles / switch / Accessory	NF400-SEP with MDU NF400-HEP with MDU	NF600-SEP with MDU NF600-HEP with MDU NF800-SEP with MDU NF800-HEP with MDU
Number of poles	3 or 4 poles	
switch	S	
AL		(*1)
AX	① ③ ② ④	(*1) ⑤ ③ ⑥ ④
SHT	(*2)	(*2)
UVT	(*3) (*4)	(*3) (*4)
AL + AX	(*1)	(*1)
AL + SHT	(*1) (*2)	(*1) (*2)
AX + SHT	(*1) (*2) ③ ① ②	(*1) (*2) ① ③ ⑤ ② ④ ③ ① ④ ②
AL + AX + SHT	(*1) (*2)	(*1) (*2)
AL + UVT	(*1) (*3) (*4) (*5)	(*1) (*3) (*4) (*5)
AX + UVT	(*1) (*3) (*4) (*5) ③ ① ②	(*1) (*3) (*4) (*5) ① ③ ⑤ ② ④ ③ ① ④ ②
AL + AX + UVT	(*1) (*3) (*4) (*5)	(*1) (*3) (*4) (*5)
PAL	(*6)	(*6)
EPAL	———	———
TI	(*6) With contact outputs for PAL and OAL	(*6) With contact outputs for PAL and OAL

Notes *1 In the case where three or more accessories are installed on the left pole side and AL, AX or AL and AX are installed on the pole on which SLT, SHT or UVT is installed, the SLT will be manufactured to order.
*2 SHT and UVT are normally installed on the right pole side. If you intend to install them on the left pole side, specify so. (The reset preventing UVT must be installed on the left pole side.)
*3 The UVT voltage module is installed externally. UTV is not provided with a cassette.
*4 UVT is normally installed on the right pole. If you intend to install it on the left pole, specify so.
*5 When AL, AX or AL and AX are installed on the pole on which UVT is installed, the UVT voltage module must be installed separately.
*6 The standard model has a terminal block. A 5-VA control power supply (compatible with 100 to 240 V AC/DC) is required. (In this case, another internal accessory cannot be installed on the right pole.)

Remark: 1. The encircled numbers indicate the order of installation.

MDU Breakers

Table 6-8-2 Table of maximum number of internal accessories

● AL ○ AX AL for transmission with MDU AX for transmission with MDU SHT or UVT TI

■ PAL → Outgoing direction of lead wires

Handle of circuit breaker

Left pole → ← Right pole

▭ are cassette type accessories.

Model / Number of poles / switch / Accessory	NF400-SEP with MDU NF400-HEP with MDU	NF600-SEP with MDU NF600-HEP with MDU NF800-SEP with MDU NF800-HEP with MDU
Number of poles	3 or 4 poles	
switch	S	
AL for transmission with MDU (*1)		
AX for transmission with MDU (*1)		
AL + AX for transmission with MDU (*1)		
AL + AX + AL for transmission with MDU (*1)		
AL+AX + AX for transmission with MDU (*1)		
AL + AX + AL + AX for transmission with MDU (*1)		

Note *1 To transmit signals from AL, AX or AL and AX, AL and/or AX for transmission with the MDU are installed on the left pole side. In this case, the lead wires of AL and/or AX for transmission with the MDU installed on the left pole side cannot be drawn out to the outside or fitted to the terminal block.

● AL ○ AX AL for transmission with MDU AX for transmission with MDU SHT or UVT

■ PAL → Outgoing direction of lead wires

Handle of circuit breaker

Left pole → ← Right pole

▭ are cassette type accessories.

Model / Number of poles / switch / Accessory	NF250-SEV with MDU NF250-HEV with MDU
Number of poles	3 or 4 poles
switch	S
AL	
AX	
AL + AX	(*1)
SHT or UVT	(*2)
AL + SHT	(*2)
AX + SHT	(*2)
AL + AX + SHT	(*2)
AL + UVT	(*2)
AX + UVT	(*2)
AL + AX + UVT	(*2)
AL for transmission with MDU (*3)	
AL for transmission with MDU AX (*3)	
AL for transmission with MDU AL + AX (*3)	
AL for transmission with MDU AL + AX + AL (*3)	
AL for transmission with MDU AL + AX + AX (*3)	
AL for transmission with MDU AL + AX + AL + AX (*3)	

Notes *1 The second AX can be installed in place of the AL on the left pole side. When placing an order, specify the incorporation of the switches in the body.
*2 When UVT is provided, the UVT voltage module will come in the vertical lead wire terminal block type. (SHT does not have a voltage module.)
*3 To transmit signals from AL, AX or AL and AX, AL and/or AX for transmission with the MDU are installed on the left pole side. In this case, the lead wires of AL and/or AX for transmission with the MDU installed on the left pole side cannot be drawn out to the outside or fitted to the terminal block. In the case of 225A frame circuit breakers, AL for transmission with the MDU must be installed for fault current measurement.

Remark: 1. The encircled numbers indicate the order of installation.

5. Cassette Type Accessories

The internal accessories for major models having a frame size from 30 to 800 A come in cassettes, and they can be installed to and removed from circuit breakers by the user.
Some cassette type accessories have lead wires drawn out, and others have vertical lead wire terminal blocks (SLT). (These parts are supplied by 10 pieces for frame size from 30 to 250 A or by 1 piece for frame size from 400 to 800 A.)

■Applicable models and kinds of cassette type accessories

	Model	Alarm switch (AL)	Auxiliary switch (AX)	Shunt tripping device (SHT)	Undervoltage tripping device (UVT)
MCCB	NF63-CV~NF250-CV, NF32-SV~NF250-SV/SXV NF63-HV~NF250-HV/HXV, NF125-LXV~NF250-LXV NF125-SGV~NF250-SGV, NF125-LGV~NF250-LGV NF125-HGV~NF250-HGV NF125-SEV, NF250-SEV, NF125-HEV, NF250-HEV NF125-RGV, NF250-RGV, NF125-UV, NF250-UV NF100-CVFU, NF125-SVU/HVU, NF250-SVU/HVU	○	○	○	○
	NF50-SVFU, NF400-CW, NF630-CW, NF800-CEW NF400-SW, NF630-SW, NF400-SEW~NF800-SEW NF800-SDW, NF400-HEW~NF800-HEW NF400-REW~NF800-REW, NF400-UEW, NF800-UEW NF400-SWU/HWU, NF630-SWU/HWU	○	○	○	–
ELCB	NV63-CV~NV250-CV, NV32-SV~NV250-SV NV63-HV~HV250-HV NV125-SEV, NV250-SEV, NV125-HEV, NV250-HEV NV100-CVFU, NV125-SVU/HVU, NV250-SVU/HVU	○	○	○	○
	NV50-SVFU, NV400-CW, NV630-CW NV400-SW, NV630-SW, NV400-SEW~NV800-SEW NV400-HEW~NV800-HEW, NV400-REW	○	○	○	–

■Procedure for installing cassette type accessories

1. Press the trip button (PTT) to trip the circuit breaker. (*1)

2. Loosen the cover screws.

3. Open the cover.

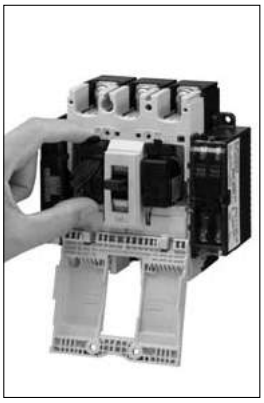

4. Install the cassette type accessory. (*2)

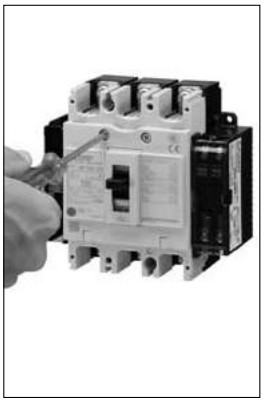

5. Close the cover, and tighten the screws.

Notes *1. When installing any cassette type accessory, set the circuit breaker to the tripped state.
*2. If the inner lid or another accessory has been installed, remove it before installing the accessory.
When any circuit breaker supplied with the inner lid is used without an accessory, fit the inner lid without fail.
Failure to do so may affect the short-circuiting performance.
Models with inner lid: NF125-SV, NF125-HV, NF125-UV, NF125-SXV, NF125-LXV, NF125-HXV
NV125-SV, NV125-HV
NF160-SGV, NF160-LGV, NF160-HGV
NF250-SV, NF250-HV
NF250-SXV, NF250-LXV, NF250-HXV
NF250-SGV, NF250-LGV, NF250-HGV
NV250-SV, NV250-HV
NF125-SVU, NF125-HVU, NV125-SVU, NV125-HVU
NF250-SVU, NF250-HVU, NV250-SVU, NV250-HVU
NF250-SEV, NF250-HEV, NF250-UV
NV250-HEV
NF125-SEV, NF125-HEV
NV125-SEV, NV125-HEV
NF400-REW, NF400-UEW
NF630-REW, NV400-REW
NF800-HEW, NF800-REW, NF800-UEW
NV800-HEW
NF630-SWU, NF630-HWU

Cautions when installing

Before installing or removing any cassette type accessory, set the circuit breaker and accessories to the no-voltage state.
Never install a cassette type accessory while the handle is in the ON or OFF position. Doing so may damage the accessory.
When installing an accessory with lead wires drawn out, apply the supplied nameplate to the circuit breaker side face.
When installing an accessory with lead wires drawn out for a frame size of 400 to 800 A, secure the lead wires along the circuit breaker side face with the supplied lead wire retainers.

Type name

Table 6-9-1

Model MCCB	Model ELCB	Installation pole	AL	AX	AL+AX	SHT	UVTN or UVTS
NF50-SVFU		For right pole	AL-03SVU AL-03SVURS	AX-03SVU AX-03SVURS	ALAX-03SVU ALAX-03SVURS	SHTA240-03SVUR SHTA440-03SVUR SHTD100-03SVUR SHTA240-03SVURS SHTA440-03SVURS SHTD100-03SVURS	–
		For left pole					
	NV50-SVFU	For left pole	AL-03SVU AL-03SVULS	AX-03SVU AX-03SVULS	ALAX-03SVU ALAX-03SVULS	SHTA240-03SVUL SHTA440-03SVUL SHTD100-03SVUL SHTA240-03SVULS SHTA440-03SVULS SHTD100-03SVULS	–
NF32-SV, NF63-CV, NF63-SV, NF63-HV NF125-CV, NF125-SV, NF125-HV NF125-SXV, NF125-LXV, NF125-HXV NF125-SGV, NF125-LGV, NF125-HGV NF160-SGV, NF160-LGV, NF160-HGV NF125-SEV, NF125-HEV NF125-RGV, NF125-UV NF250-CV, NF250-SV, NF250-HV NF250-SXV, NF250-LXV, NF250-HXV NF250-SGV, NF250-LGV, NF250-HGV NF250-SEV, NF250-HEV NF250-RGV, NF250-UV		For right pole	AL-05SV AL-05SVRS	AX-05SV AX-05SVRS	ALAX-05SV ALAX-05SVRS	SHTA240-05SVR SHTA550-05SVR SHTD125-05SVR SHTA240-05SVRS SHTA550-05SVRS SHTD125-05SVRS	UVTNAD130-05SVR UVTSAD130-05SVR UVTNA250-05SVR UVTSA250-05SVR UVTNA480-05SVR UVTSA480-05SVR UVTNAD130-05SVRS UVTSAD130-05SVRS UVTNA250-05SVRS UVTSA250-05SVRS UVTNA480-05SVRS UVTSA480-05SVRS
		For left pole					
	NV32-SV, NV63-CV NV63-SV, NV63-HV NV125-CV, NV125-SV NV125-HV NV125-SEV, NV125-HEV NV250-CV, NV250-SV NV250-HV NV250-SEV, NV250-HEV	For left pole	AL-05SV AL-05SVLS	AX-05SV AX-05SVLS	ALAX-05SV ALAX-05SVLS	SHTA240-05SVL SHTA550-05SVL SHTD125-05SVL SHTA240-05SVLS SHTA550-05SVLS SHTD125-05SVLS	UVTNAD130-05SVL UVTSAD130-05SVL UVTNA250-05SVL UVTSA250-05SVL UVTNA480-05SVL UVTSA480-05SVL UVTNAD130-05SVLS UVTSAD130-05SVLS UVTNA250-05SVLS UVTSA250-05SVLS UVTNA480-05SVLS UVTSA480-05SVLS
NF100-CVFU NF125-SVU/HVU NF250-SVU/HVU		For right pole	AL-05SVU AL-05SVURS	AX-05SVU AX-05SVURS	ALAX-05SVU ALAX-05SVURS	SHTA240-05SVUR SHTA550-05SVUR SHTD125-05SVUR SHTA240-05SVURS SHTA550-05SVURS SHTD125-05SVURS	UVTNAD130-05SVUR UVTSAD130-05SVUR UVTNA250-05SVUR UVTSA250-05SVUR UVTNA480-05SVUR UVTSA480-05SVUR UVTNAD130-05SVURS UVTSAD130-05SVURS UVTNA250-05SVURS UVTSA250-05SVURS UVTNA480-05SVURS UVTSA480-05SVURS
		For left pole					
	NV100-CVFU NV125-SVU/HVU NV250-SVU/HVU	For left pole	AL-05SVU AL-05SVULS	AX-05SVU AX-05SVULS	ALAX-05SVU ALAX-05SVULS	SHTA240-05SVUL SHTA550-05SVUL SHTD125-05SVUL SHTA240-05SVULS SHTA550-05SVULS SHTD125-05SVULS	UVTNAD130-05SVUL UVTSAD130-05SVUL UVTNA250-05SVUL UVTSA250-05SVUL UVTNA480-05SVUL UVTSA480-05SVUL UVTNAD130-05SVULS UVTSAD130-05SVULS UVTNA250-05SVULS UVTSA250-05SVULS UVTNA480-05SVULS UVTSA480-05SVULS
NF400-CW, NF400-SW, NF400-SEW NF400-HEW, NF400-REW, NF400-UEW NF630-CW, NF630-SW, NF630-SEW NF630-HEW, NF630-REW NF800-CEW, NF800-SDW, NF800-SEW NF800-HEW, NF800-REW, NF800-UEW		For right pole (2, or 3 poles)	–	AX-4SW AX-4SWRS AX2-4SWRS	–	SHT-4SW SHT-4SWRS	–
		For right pole (4 poles)	–	–	–	SHT-4SWRFS SHT-8SWRFS	–
		For left pole (2, 3 or 4 poles)					
	NV400-CW, NV400-SW NV400-SEW, NV400-HEW NV400-REW NV630-CW, NV630-SW NV630-SEW, NV630-HEW NV800-SEW, NV800-HEW	For left pole (2, 3 or 4 poles)	AL-4SWL AL-4SWLS AL2-4SWLS	AX-4SW AX-4SWLS AX2-4SWLS	ALAX-4SWL ALAX-4SWLS	SHT-4SW SHT-4SWLS	–
NF400-SWU, NF400-HWU NF630-SWU, NF630-HWU		For right pole	–	AX-4SWU AX-4SWURS AX2-4SWURS	–	SHT-4SWU SHT-4SWURS	–
		For left pole	AL-4SWUL	AX-4SWUL	ALAX-4SWUL	SHT-4SWU	

Remarks:
1. For the possibility of installation of accessories and the installation pole, refer to the tables of maximum numbers on pages 104 to 108.
2. AL and AX for minute load can be manufactured to order.
3. Corrosion-proof cassette type AL and AX are not available. When the circuit breaker body is exposed to class 1 tropicalization, class 2 tropicalization, reinforced corrosion resistance treatment or class 2 heat resistance treatment, place an order for the circuit breaker including the accessories.
4. Cassette type accessories with SLT for right pole cannot be installed to 4-pole circuit breakers. Accessories with SLT for right pole to be used in 4-pole circuit breakers are manufactured to order.
5. Cassette type accessories with SLT cannot be installed to flush plate type circuit breakers.
6. Cassette type accessories (AL, AX and SHT) cannot be installed to circuit breakers with MG.
7. It is impossible to install a combination of a cassette type accessory with lead wires drawn out and that with SLT or a combination of cassette type accessories with SLT on the same pole.
8. It is impossible to install the cassette type AL or AX to the pole to which UVT has been installed.
9. AX and SHT with lead wires drawn out for frame size from 400 to 800 A can be installed to any of the right and left poles.
10. When installing more than one AL or AX with lead wires drawn out for frame size from 400 to 800 A to one side, install the necessary number of the accessories for one piece. The lead wires from the circuit breaker vary in length depending on the installation position.
11. Install the cassette accessories for frame size from 400 to 800 A starting from the outside of the installation positions. For the installation positions, see the installation positions shown in the following table.
12. When three pieces of more of AL and AX are installed on a circuit breaker with a frame size 400 to 800 A, the AL and AX with SLT are manufactured to order.

Installation positions of cassette type accessories for 400 to 800 A frames

Installation positions

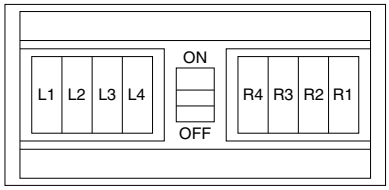

Table 6-9-2 Installation positions of cassette type accessories

Frame (A)	400•600•630					800							
Accessory \ Installation positions	L1	L2	L3	R2	R1	L1	L2	L3	L4	R4	R3	R2	R1
AL	○	○	–	–	–	○	○	○	–	–	–	–	–
AX	○	○	–	○	○	○	○	○	○	–	–	○ (*1)	○
AL + AX	○	○	–	–	–	○	○	–	–	–	–	–	–
SHT	–	○		○		–	–	○		○ (*1)		–	–

* Accessories only for Earth Leakage Circuit Breakers (NV-C, S and H), Earth Leakage Alarm Breakers (NF-Z) and single-phase 3-wire circuits (NF-N and NV-N) cannot be installed to R1, R2, R3 or R4.

Note *1 It is impossible to simultaneously install AX on R2 and SHT on R3 or R4.

Interpretation of type name

(1) Alarm switch • Auxiliary switch

AL 2 — 4 SV (or SW) L S B

Kind of accessory	
AL	Alarm switch
AX	Auxiliary switch

Number of accessories to be installed
When installing more than one AL or AX with SLT, specify the number.

Ampere frame	
05	For 30 to 250A frames
4	For 400 to 800A frames

Installation position	
R	Right pole, 2 or 3 poles
RF	Right pole, 4 poles
L	Left pole
Blank	Right and left

Kind of switch	
Blank	Standard
B	Minute load

With SLT (vertical lead wire terminal block)
(with lead wires drawn out unless otherwise specified)

(2) Shunt tripping device
Undervoltage tripping device

SHT A1 — 1 SV (or SW) R S

Kind of accessory	
SHT	Shunt tripping device
UVTN (*1)	Undervoltage tripping device
UVTS (*2)	

Voltage (SHT)	
A240	AC100-240V
A440	AC380-440V
A480	AC380-480V
A550	AC380-550V
D100	DC100V
D125	DC100-125V
Blank	AC100-450/DC100-200V

Ampere frame	
05	For 30 to 250A frames
4	For 400•600•630A frames For 800A frames (3P)
8	For 800A frames (4P)

Installation position	
R	Right pole, 2 or 3 poles
RF	Right pole, 4 poles
L	Left pole
Blank	Right and left

With SLT (vertical lead wire terminal block)
(with lead wires drawn out unless otherwise specified)

Voltage (UVTN or UVTS)	
AD130	Switching between 100 to 130 V AC and 100 to 130 V DC
A250	AC200-250V
A480	AC380-480V

Notes *1 The circuit breaker cannot be reset if voltage is not applied to UVTN. (Non-reset type UVT)
*2 The circuit breaker can be reset even if voltage is not applied to UVTS. (Reset type UVT)

6. Shunt Trip (SHT)

■Coil ratings (standard)

Table 6-10-1

Model	Provision of coil burnout preventing switch	Voltage (V)	Input (VA) (*1) AC	Input (VA) (*1) DC	Operating time (*2) (ms)
NF50-SVFU NV50-SVFU	Provided	AC100-240 380-440 DC100	120	60	15 or less
NF32-SV, NF63-CV/SV/HV, NF125-SXV/LXV/HXV/SGV/LGV/HGV NF160-SGV/LGV/HGV, NF125-CV/SV/HV/SEV/HEV/RGV/UV NF250-CV/SV/HV/SEV/HEV/RGV/UV NF250-SXV/LXV/HXV/SGV/LGV/HGV NV32-SV, NV63-CV/SV/HV NV125-CV/SV/HV/SEV/HEV, NV250-CV/SV/HV/SEV/HEV NF100-CVFU, NF125-SVU/HVU, NF250-SVU/HVU NV100-CVFU, NV125-SVU/HVU, NV250-SVU/HVU		AC100-240 380-550 DC100-125		50	
NF225-CWU		AC100-240 380-480 DC100-125		60	
NF400-CW/SW/SEW/HEW/REW/UEW NF630-CW/SW/SEW/HEW/REW NF800-CEW/SDW/SEW/HEW/REW/UEW NV400-CW/SW/SEW/HEW/REW NV630-CW/SW/SEW/HEW NV800-SEW/HEW, NF400-SWU/HWU, NF630-SWU/HWU		Compatible with 100 to 450 V AC and 100 to 200 V DC	100V 20 200V 50 380V 120 450V 170	100V 10 200V 35	5-15
NF1000-SEW, NF1250-SEW/SDW NF1600-SEW/SDW		AC100-120 200-240 380-450 DC100	200	70	7-15
			300	100	15-25

Notes *1 Ensure that the voltage of the operating power supply for SHT is not dropped below the allowable operating voltage (70% of the rated minimum voltage value) by the input power.
*2 The operating time is the time from when the rated voltage is applied to the shunt tripping device until the main contact of the circuit breaker starts opening.
Remark: 1. The accessory is usable at 50 Hz and 60 Hz.

■Coil ratings (list of available special voltage coils)

Table 6-10-2

Model	VAC 24	VAC 25-27	VAC 24-48	VAC 48	VAC 50-55	VAC 60	VAC 440-480	VAC 380-550	VAC 440-550	VAC 500-550	VDC 12	VDC 24	VDC 24-36	VDC 36	VDC 36-48	VDC 48	VDC 60	VDC 110	VDC 125	VDC 220	VDC 200-250	VDC 220-250	Compatible with AC/DC 24-48
NF32-SV, NF63-CV/SV/HV NF125-CV/SV/HV/SEV/HEV/RGV/UV NF125-SXV/LXV/HXV NF125-SGV/LGV/HGV, F160-SGV/LGV/HGV NF250-CV/SV/HV/SEV/HEV/RGV/UV NF250-SXV/LXV/HXV NF250-SGV/LGV/HGV NV32-SV, NV63-CV/SV/HV NV125-CV/SV/HV/SEV/HEV NV250-CV/SV/HV/SEV/HEV NF100-CVFU, NF125-SVU/HVU, NF250-SVU/HVU NV100-CVFU, NV125-SVU/HVU, NV250-SVU/HVU	–	–	○	–	–	–	–	–	–	–	○	–	○	–	○	–	–	–	–	–	○	–	–
NF225-CWU	–	–	○	–	–	○	–	–	–	–	○	–	○	–	○	–	○	–	–	–	○	–	–
NF400-CW/SW/SEW/HEW/REW/UEW NF630-CW/SW/SEW/HEW/REW NF800-CEW/SDW/SEW/HEW/REW/UEW NV400-CW/SW/SEW/HEW/REW NV630-CW/SW/SEW/HEW NV800-SEW/HEW, NF400-SWU/HWU, NF630-SWU/HWU	–	–	–	–	–	–	–	○	–	–	○	–	–	–	–	–	–	–	–	–	–	–	○
NF1000-SEW, NF1250-SEW/SDW NF1600-SEW/SDW	○	–	–	○	–	–	○	–	–	○	○	○	–	○	–	○	–	○	○	–	–	–	–

7. Undervoltage Trip (UVT)

(1) Specifications for UVT and coil ratings

Table 6-11

Model	Specification		Coil ratings			
	Reset type	Non-reset type	Voltage (V)		Input (VA)	Operating time (*2) (ms)
			Standard voltage	Special voltage (*1)		
NF50-SVFU NV50-SVFU	–	○	AC/DC100-130V AC200-250V AC380-480V	AC/DC24V AC/DC48V	5	30 or less
NF32-SV, NF63-CV/SV/HV/HRV NF125-CV/SV/HV/RGV/SEV/HEV/UV NF125-SXV/LXV/HXV NF125-SGV/LGV/HGV, NF160-SGV/LGV/HGV NF250-CV/SV/HV/RGV/SEV/HEV/UV NF250-SXV/LXV/HXV NF250-SGV/LGV/HGV NV32-SV, NV63-CV/SV/HV NV125-CV/SV/HV/SEV/HEV NV250-CV/SV/HV/SEV/HEV NF100-CVFU, NF125-SVU/HVU, NF250-SVU/HVU NV100-CVFU, NV125-SVU/HVU, NV250-SVU/HVU	○	○		AC/DC24V AC/DC48V AC500-600V		
NF400-CW/SW/SEW/HEW/REW/UEW NF630-CW/SW/SEW/HEW/REW NF800-CEW/SDW/SEW/HEW/REW/UEW NV400-CW/SW/SEW/HEW/REW NV630-CW/SW/SEW/HEW NV800-SEW/HEW	○ (*4)	○ (*5)	Switching between 100 to 110 and 120 to 130 AC Switching between 200 to 220 and 230 to 250 AC Switching between 380 to 415 and 440 to 480 AC Switching between 100 and 110 DC (*3)	Switching between 24/48 AC Switching between 500 to 550/600 AC Switching between 24/48DC Switching between 110/125DC (*3)	5	5-30
NF1000-SEW, NF1250-SEW NF1600-SEW	○	○				5-35
NF400-SWU/HWU, NF630-SWU/HWU	○ (*4)	–				5-30
NF225-CWU	–	○		Switching between 24/48 AC Switching between 24/48DC Switching between 110/125DC (*3)		30 or less

Notes *1 Some special voltage models vary in voltage range.
*2 The operating time is the time from when the undervoltage tripping device is set to the no-voltage state until the main contact starts opening.
*3 The accessory is usable at 50 Hz and 60 Hz.
*4 If UVT is turned on without excitation, the circuit breaker instantaneously opens and immediately trips.
*5 Only for installation on the left pole

(2) Reset type and non-reset type UVT

■Reset type (Refer to Table 6-12.)

The reset type UVT has a structure which does not trip a circuit breaker even if the UVT coil is not excited when the circuit breaker handle is in the OFF or reset position. Therefore, it keeps the circuit breaker in the reset state even if the coil is not excited when the breaker is reset electrically.

When the coil in the unexcited state is turned on, the circuit breaker is normally tripped. However, the major contacts of some models of circuit breakers may instantaneously close, or, on circuit breakers with AX, the AX switches may instantaneously change over. For electrical interlock, use a non-reset type UVT.

■Non-reset type (Refer to Table 6-12.)

When the UVT coil is not excited, the circuit breaker cannot be set to the off state even if the circuit breaker is tried to be reset from the tripped state. When the coil exciting voltage restores to the reference voltage or more, the circuit breaker can be reset to the off state.

(3) Time delay UVT

- This type of UVT has a time delay in operation.
- It can prevent operation upon occurrence of instantaneous power failure.

Table 6-12

UVT module type name	Time delay	Voltage (V)	
		Standard voltage	Special voltage
U-05W	Switching among 0.1, 0.3 and 0.5 s	AC24/48 AC100–120/200–240/380–450 AC220–250/380–450/460–550 (Compatible with 50 Hz and 60 Hz) DC100–110	AC380–450/460–550/600–690 (Compatible with 50 Hz and 60 Hz) DC24/48
U-30W	Switching among 0.5, 1 and 3 s	AC100–120/200–240/380–450 AC220–250/380–450/460–550 (Compatible with 50 Hz and 60 Hz)	–

(4) Structure of UVT

The UVT mechanical unit is installed in a circuit breaker, and the UVT voltage module is installed on the outside of the circuit breaker. When the voltage drops, the UVT voltage module detects the voltage drop, and the UVT mechanical unit trips the circuit breaker.

The UVT voltage module has a vertical lead wire terminal block and is normally installed on the body. The external module will be manufactured to order.

●Outline drawing

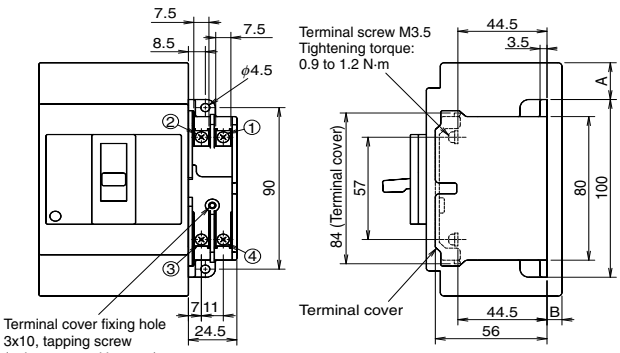

Fig. 1

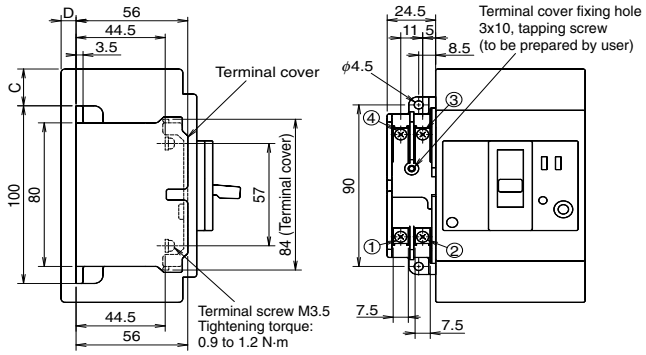

Fig. 2

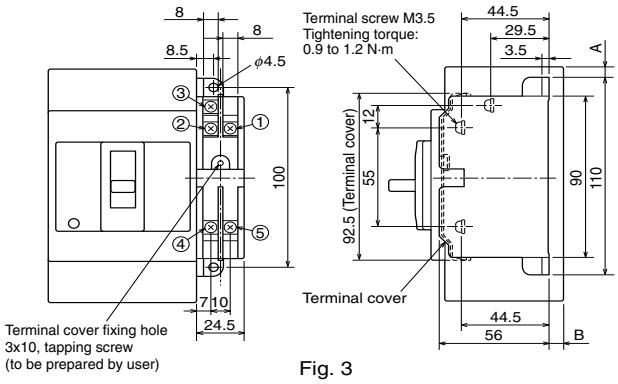

Fig. 3

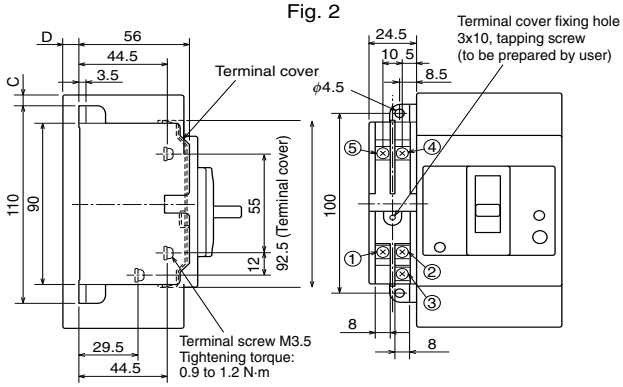

Fig. 4

●Examples of connection

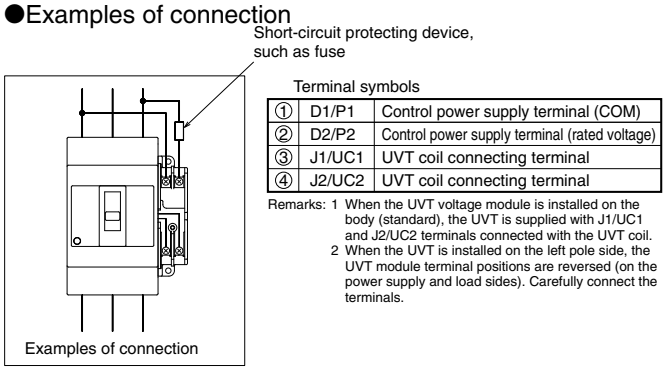

Terminal symbols

①	D1/P1	Control power supply terminal (COM)
②	D2/P2	Control power supply terminal (rated voltage)
③	J1/UC1	UVT coil connecting terminal
④	J2/UC2	UVT coil connecting terminal

Remarks: 1 When the UVT voltage module is installed on the body (standard), the UVT is supplied with J1/UC1 and J2/UC2 terminals connected with the UVT coil.
2 When the UVT is installed on the left pole side, the UVT module terminal positions are reversed (on the power supply and load sides). Carefully connect the terminals.

Fig. 5

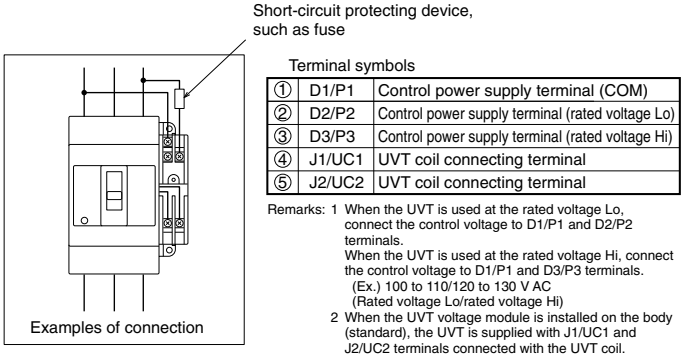

Terminal symbols

①	D1/P1	Control power supply terminal (COM)
②	D2/P2	Control power supply terminal (rated voltage Lo)
③	D3/P3	Control power supply terminal (rated voltage Hi)
④	J1/UC1	UVT coil connecting terminal
⑤	J2/UC2	UVT coil connecting terminal

Remarks: 1 When the UVT is used at the rated voltage Lo, connect the control voltage to D1/P1 and D2/P2 terminals.
When the UVT is used at the rated voltage Hi, connect the control voltage to D1/P1 and D3/P3 terminals.
(Ex.) 100 to 110/120 to 130 V AC
(Rated voltage Lo/rated voltage Hi)
2 When the UVT voltage module is installed on the body (standard), the UVT is supplied with J1/UC1 and J2/UC2 terminals connected with the UVT coil.
3 When the UVT is installed on the left pole side, the UVT module terminal positions are reversed (on the power supply and load sides). Carefully connect the terminals.

Fig. 6

Table 6-13 Installation on right pole side

Model	Reference drawing	Variable dimensions	
		A	B
NF50-SVFU	Fig. 1 Fig. 5	11	7.5
NF32-SV, NF63-CV/SV/HV		20.5	7.5
NF100-CVFU		20.5	7.5
NF125-CV/SV/HV/SXV		20.5	7.5
NF125-SVU/HVU		41.5	7.5
NF125-UV		81.5	7.5
NF125-SEV/HEV/RGV, NF250-CV/SV/HV/RGV/SEV/HEV NF125-LXV/HXV/SGV/LGV/HGV, NF160-SGV/LGV/HGV NF250-SXV/LXV/HXV/SGV/LGV/HGV		38	7.5
NF250-SVU/HVU		48	7.5
NF250-UV		113	7.5
NF225-CWU	Fig. 3 Fig. 6	25.5	7.5
NF400-CW/SW/SEW/HEW/REW NF630-CW/SW/SEW/HEW/REW, NF400-SWU/HWU		67.5	41.5
NF400-UEW(3P)		107.5	138.5
NF800-CEW/SDW/SEW/HEW/REW, NF630-SWU/HWU		76.5	41.5
NF400-UEW(4P), NF800-UEW		123.5	138.5
NF1000-SEW, NF1250-SEW, NF-1600-SEW		161	63

Table 6-14 Installation on left pole side

Model	Reference drawing	Variable dimensions	
		C	D
NV125-CV/SV/HV	Fig. 2	20.5	7.5
NV125-SEV/HEV, NV250-CV/SV/HV/SEV/HEV	Fig. 5	38	7.5
NF400-CW/SW/SEW/HEW/REW NF630-CW/SW/SEW/HEW/REW NV400-CW/SW/SEW/HEW/REW NV630-CW/SW/SEW/HEW NF400-ZCW/ZSW/ZEW NF400-SWU/HWU	Fig. 4 Fig. 6	67.5	41.5
NF400-UEW(3P)		107.5	138.5
NF800-CEW/SDW/SEW/HEW/REW NV800-SEW/HEW, NF630-SWU/HWU		76.5	41.5
NF400-UEW(4P), NF800-UEW		123.5	138.5

8. Lead Wire Drawing

■Lead wire lateral drawing … Available to all models

Note *1 Except for BH, BH-P, BH-S, BH-PS, BH-D6, BH-D10, BH-DN, BV-D, BV-DN and KB-D.

Remark: 1. Although the following models are applicable to lead wires drawn laterally, they are normally applicable to installation in close contact with the circuit breaker side faces. (The circuit breaker side faces have grooves.)

NF32-SV, NF63-CV/SV/HV~NF250-CV/SV/HV/UV/SXV/LXV/HXV
NF125-SEV/HEV, NF250-SEV/HEV, NF125-RGV
NF250-RGV, NF125-SGV/LGV/HGV~NF250-SGV/LGV/HGV
NV32-SV, NV63-CV/SV/HV~NV250-CV/SV/HV
NV125-SEV/HEV, NV250-SEV/HEV
NF50-SVFU, NF100-CVFU, NF125-SVU/HVU, NF250-SVU/HVU, NF225-CWU
NV100-CVFU, NV125-SVU/HVU
NV250-SVU/HVU

(When a 4-pole model among the above models has accessories installed on the right pole side, the lead wires are 400 mm long.)

■Lead wires drawing to load

Table 6-15

Model applicable to lead wire drawing to load	(only front connection type)
NF30-CS	

■Specifications for lead wires

Table 6-16

Applicable model	Kind of lead wire	Lead wire thickness	Lead wire length	Example of ring mark
NF30-CS	Heat-resistant wire	0.4mm^2	450mm	98/ALa (Red), 96/ALb (Blue) 95/ALc (Gray), 14/AXa (Brown) 12/AXb (Black), 11/AXc (White) C1/S1 (Red), C2/S2 (Red) J1/UC1 (White), J2/UC2 (White) A terminal symbol is indicated on each lead wire with a ring mark.
1000A frame or above		0.75mm^2		
30 to 800A frames except above models		0.5mm^2		

9. Lead Wire Terminal Block

(1) Vertical lead wire terminal block (SLT)

The lead wire terminal blocks for plug-in terminal blocks are available (P-LT). The drilling size of these terminal blocks differs from the standard size. Consult us for details.
For a flush plate type circuit breaker, a terminal block will be installed on the circuit breaker rear face. (Specify as FP-LT.)

Note *1 When the circuit breaker body is equipped with internal accessories and electrical operation device of motor-driven type (2) or spring charge type (2), the circuit breaker is normally provided with a lead wire terminal block.

■MCCB

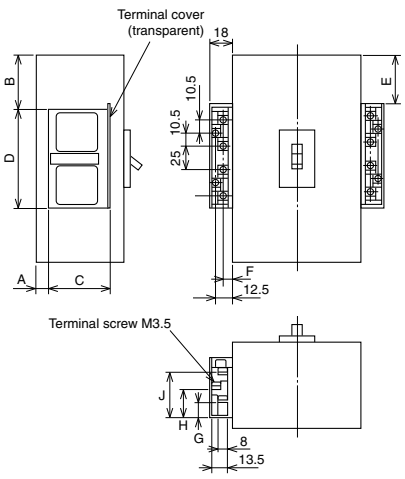

Table 6-17-1 Table of variable dimensions

Model	A	B	C	D	E	F	G	H	J
NF30-CS (*1)	4	4.5	44.5	86.5	4.5	7	10	22	34
NF32-SV, NF63-CV/SV/HV	7	26.5	54	86.5	26.5	7	14	26	38
NF125-CV/SV/HV/SXV	7	26.5	54	86.5	26.5	7	14	26	38
NF125-UV	7	87.5	54	86.5	87.5	7	14	26	38
NF250-UV	7	119	54	86.5	119	7	14	26	38
NF125-SEV/HEV/RGV, NF250-CV/SV/HV/SEV/HEV/RGV NF125-LXV/HXV/SGV/LGV/HGV, NF160-SGV/LGV/HGV NF250-SXV/LXV/HXV/SGV/LGV/HGV	7	44	54	86.5	44	7	14	26	38
NF50-SVFU	7	27.5	54	86.5	27.5	7	14	26	38
NF100-CVFU	7	28.5	54	86.5	28.5	7	14	26	38
NF125-SVU/HVU	7	47.5	54	86.5	47.5	7	14	26	38
NF225-CWU	7	37	54	86.5	37	7	14	26	38
NF400-CW/SW/SEW/HEW/REW, NF400-SWU/HWU NF630-CW/SW/SEW/HEW/REW	41	79.5	54	86.5	79.5	7	14	26	38
NF800-CEW/SDW/SEW/HEW/REW, NF630-SWU/HWU		88.5	54	86.5	88.5	7	14	26	38
NF1000-SEW, NF1250-SEW, NF1600-SEW	62.5	173	54	86.5	173	7	14	26	38
NF400-UEW(3P) (*1)	138	119.5	54	86.5	119.5	7	14	26	38
NF400-UEW(4P), NF800-UEW (*1)		135.5	54	86.5	135.5	7	14	26	38

Note *1 The terminal positions are different from those shown in the left figure. Consult us for details.
Remark: 1. Terminal screw tightening torque: M3.5 … 0.9 to 1.2 N·m

■ELCB

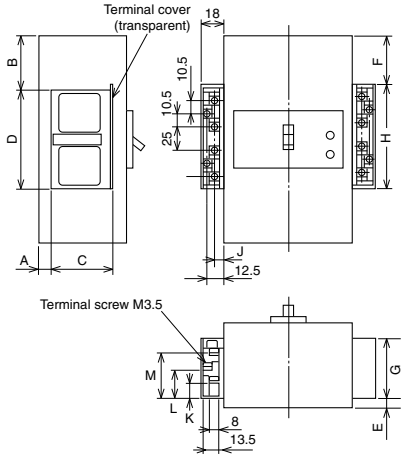

Table 6-17-2 Table of variable dimensions

Model	A	B	C	D	E	F	G	H	J	K	L	M
NV50-SVFU	16.5	17	54	86.5	16.5	17	54	86.5	6	10.5	22.5	34.5
NV32-SV, NV63-CV/SV/HV	7	26.5	54	86.5	7	26.5	54	86.5	7	14	26	38
NV100-CVFU	7	36.5	54	86.5	7	36.5	54	86.5	7	14	26	38
NV125-CV/SV/HV	7	26.5	54	86.5	7	26.5	54	86.5	7	14	26	38
NV125-SVU/HVU	7	47.5	54	86.5	7	47.5	54	86.5	7	14	26	38
NV125-SEV/HEV, NV250-CV/SV/HV/SEV/HEV	7	44	54	86.5	7	44	54	86.5	7	14	26	38
NV250-SVU/HVU	7	54	54	86.5	7	54	54	86.5	7	14	26	38
NV400-CW/SW/SEW/HEW/REW NV630-CW/SW/SEW/HEW	41	79.5	54	86.5	26.5	79.5	52	92	7	14	26	38
NV800-SEW/HEW (*1)	41	88.5	54	86.5	26.5	88.5	52	92	7	14	26	38

Notes *1 The terminal positions are different from those shown in the left figure. Consult us for details.
Remarks: 1. Terminal screw tightening torque: M3.5 … 0.9 to 1.2 N·m
2. The lead wire terminal block for TBL is provided on the right pole side. However, the lead wire terminal blocks for TBL of NV30-FA and NV50-FA are provided on the left pole side.

■14-terminal SLT

SLT for installing three or more internal accessories on the left pole side

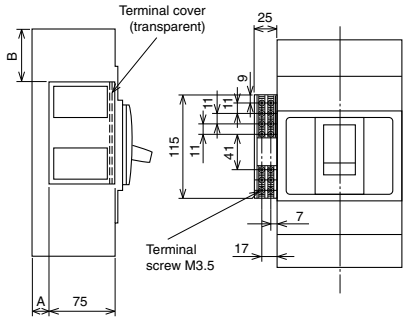

Table 6-17-3

Model		A	B
MCCB	ELCB		
NF400-CW/SW/SEW NF400-HEW/REW NF630-CW/SW/SEW NF630-HEW/REW	NV400-CW/SW/SEW NV400-HEW/REW NV630-CW/SW/SEW/HEW	20	60
NF400-UEW(3P)	–	117	100
NF800-CEW/SDW/SEW NF800-HEW/REW	NV800-SEW/HEW	20	69
NF400-UEW(4P), NF800-UEW	–	117	116
NF1000-SEW, NF1250-SEW NF1600-SEW	–	35	154

Remark: 1. The terminal positions are different from those shown in the left figure. Consult us for details.

10. Test Button Module (TBM)

- The test button is kept pressed while control input voltage is applied to the button. (When ELCB of time delay type is used, apply voltage for 2 seconds or more.)
- The test button module is supplied with voltage through a circuit isolated from the main circuit. It can share the control sequence with SHT of a molded case circuit breaker.
- Unlike TBL, the test button modules can be connected in parallel.
- The module is normally provided with a vertical lead wire terminal block (SLT).

Table 6-18

Model	NV32-SV NV63-CV/SV/HV NV125-CV/SV/HV NV125-SEV/HEV NV250-CV/SV/HV/SEV/HEV NV50-SVFU NV100-CVFU NV125-SVU/HVU NV250-SVU/HVU	NV400-CW/SW NV630-CW/SW NV400-SEW~NV800-SEW NV400-HEW~NV800-HEW NV400-REW
Control input Rated voltage (V)	Compatible with 100 to 240 AC and 100 to 240 DC (DC24) (*1)	
Control input (VA)	1.5 VA or less	1 VA or less
Reference drawing	Fig. 1	Fig. 2

Note *1 Unless otherwise specified, the module will be manufactured for 100 to 240 V AC and 100 to 240 V DC.
In the case of 24 V DC, specify the voltage.
Remark: 1. The length of the lead wires to be connected to TBM1 and 2 shall be 100 m or more.

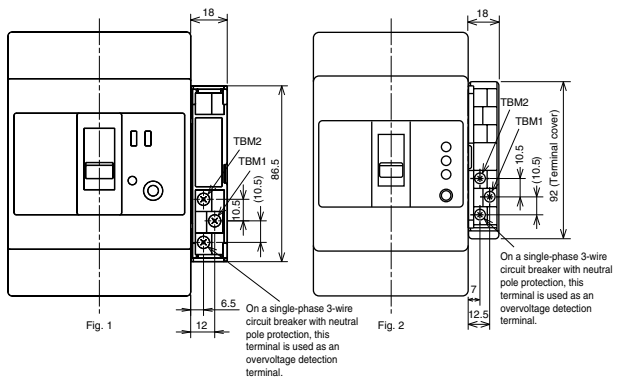

For a flush plate type with 250A frame or below, the external dimensions of the flush plate type differ from the standard dimensions.

11. Pre-Alarm Module (PAL)

The pre-alarm is a function to output an alarm when the load current exceeds the preset current value. It is helpful in securing continuous power supply and preventive maintenance.
It can be fitted to electronic circuit breakers with a frame size from 125 to 1600 A.

■ 125 and 250A frames

● Pre-alarm module (PAL module)

The standard modules have SLT. Other internal accessories cannot be installed on the right pole side.
A control power supply (compatible with 100 to 240 V AC and DC) is necessary. The control power supply voltage range is 85 to 246 V AC/DC, and the required volt-ampere is 5 VA.

Table 6-19-1

Model	Switching capacity Contact output (1a)	Resetting method
NF125-SEV NF125-HEV NF250-SEV NF250-HEV NV125-SEV NV125-HEV NV250-SEV NV250-HEV	AC125V 2A DC 30V 2A AC250V 2A DC100V 0.3A	Press the reset button, or turn off the control power supply.

Pre-alarm characteristics

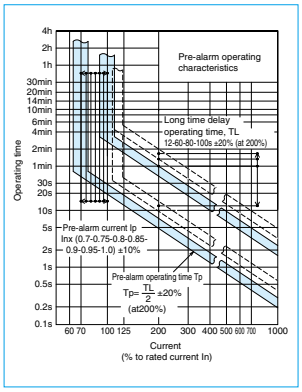

Dimensional drawing of pre-alarm module

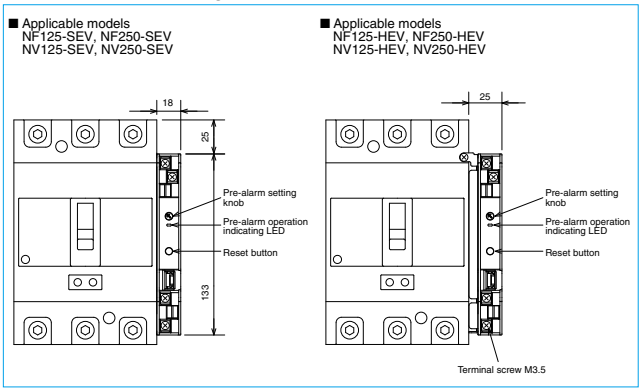

Terminal arrangement

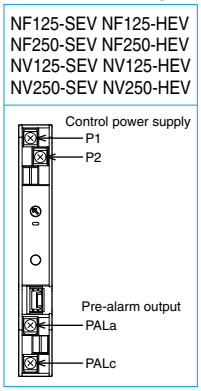

● Pre-alarm LED indication

When the load current exceeds the preset current value, the LED lamp on the pre-alarm module front panel starts blinking. When the pre-alarm output is given, the lamp stops blinking and turns on.

● Pre-alarm current setting (IP setting)

The pre-alarm current can be set to the rated current In × 0.7, 0.75, 0.8, 0.85, 0.9, 0.95 or 1.0 with the knob on the pre-alarm module front panel.

■ 400 A frame or above

● Solid state relay (SSR) output (PAL lead)

The lead wires are drawn out. On the right pole side, only internal accessories with lead wires drawn out can be installed. A control power supply is unnecessary.

Table 6-19-2

Model	Switching capacity Solid state relay (SSR) – Non-contact output	Resetting method
NF400-SEW NF400-HEW NF400-REW NF400-UEW NF630-SEW NF630-HEW NF630-REW NF800-CEW NF800-SEW NF800-HEW NF800-REW NF800-UEW NF1000-SEW NF1250-SEW NF1600-SEW NV400-SEW NV400-HEW NV400-REW NV630-SEW NV630-HEW NV800-SEW NV800-HEW	AC/DC24 to 240V 20mA	When the load current becomes lower than the preset current value, the alarm is reset.

● Pre-alarm module (PAL module)

The standard modules have SLT. Other internal accessories cannot be installed on the right pole side.
A control power supply (compatible with 100 to 200 V AC) is necessary except for NF-ZEW. The control power supply voltage range is 80 to 242 V AC, and the required volt-ampere is 10 VA.

Table 6-19-3

Model	Switching capacity Contact output (1a)	Resetting method
NF400-SEW NF400-HEW NF400-REW NF400-UEW NF630-SEW NF630-HEW NF630-REW NF800-CEW NF800-SEW NF800-HEW NF800-REW NF800-UEW NF1000-SEW NF1250-SEW NF1600-SEW NV400-SEW NV400-HEW NV400-REW NV630-SEW NV630-HEW NV800-SEW NV800-HEW	100 V AC or 200 V AC, 2 A	Press the reset button, or turn off the control power supply.

Pre-alarm characteristics

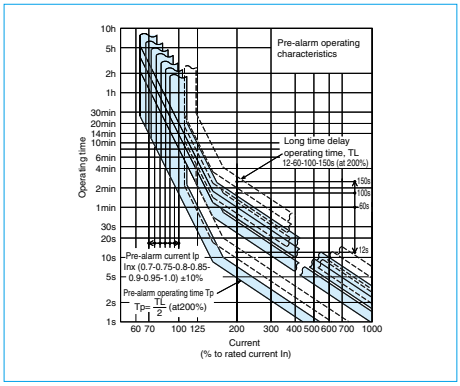

Detailed drawing of pre-alarm module

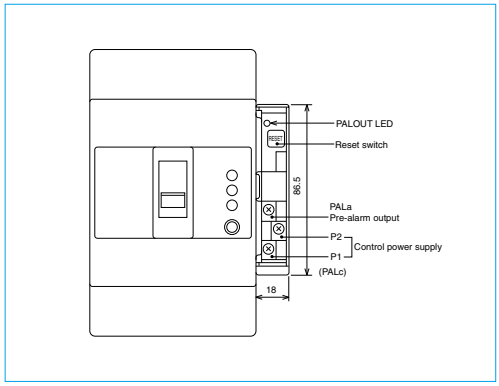

Pre-alarm module output rating

AC		
Voltage V	Current (A)	
	Resistive load	Inductive load
200	3	2
100	3	2

A control power supply (compatible with 100 to 200 V AC) is necessary. For the wiring method, see the following figure. (The control power supply voltage range is 80 to 242 V AC.) The required volt-ampere is 10 VA.

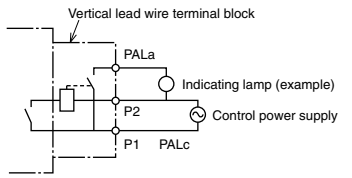

● Pre-alarm LED display (standard device)

When the load current exceeds the preset current value, the LED lamp on the circuit breaker front panel starts blinking. When the pre-alarm output is given, the lamp stops blinking and turns on.

● Pre-alarm current setting (IP setting)

The pre-alarm current can be set to the rated current In × 0.7, 0.75, 0.8, 0.85, 0.9, 0.95 or 1.0 with the knob on the circuit breaker front panel.

1. F-Type Operating Handle

Operating handle of breaker mount type to be installed to circuit breaker body

●Appearance (Color: Munsell N1.5)

- The handle provides an isolating function in combination with the circuit breaker body (except F10SW and above).
- It has a safety device which prevents the circuit breaker turning on while the door is open.
- It can be locked in the OFF position. (Up to 3 commercially available padlocks (35 mm and 40 mm) can be fitted. A type which can be locked in the ON or OFF position can be manufactured. Specify the type if required.) On circuit breakers with a frame size of 1000A or above, the handle can be locked in the ON or OFF position. (If it is necessary to lock the handle only in the OFF position, specify so.)
- It is in protection class IP54 (IEC 60529). (For circuit breakers with a frame size of 1000A or above, the protection class (IEC 60529) is IP3X (IP5X when dust-proof packing is provided).

Dust-proof packing (optional)

Type nema	Operating handle type name	Delivery category
PFL	F10SW~F120UR	●

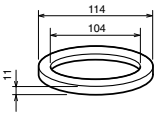

●Outline drawings

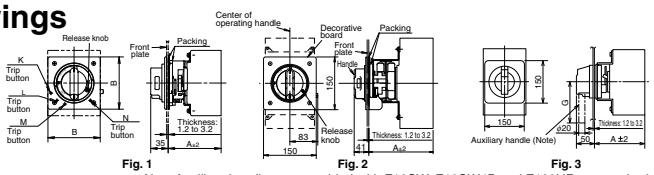

Fig. 1 Fig. 2 Fig. 3

Note Auxiliary handles are provided with F10SW, F10SW4P and F120UR as standard.
Auxiliary handles (F-HT) are provided for F-4S ~ F-6SUL as option.

●Center of hinge and breaker

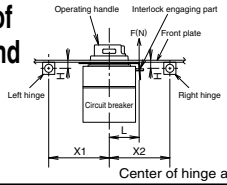

- The right drawing shows the relationship between the hinges and circuit breaker viewed from the load side of the circuit breaker.

Center of hinge and circuit breaker

	Hinge on left side		Hinge on right side	
	H	X_1	H	X_2
For 30 to 250 A frames	0 or more	(5H+85) or more	Less than 10	170 or more
			10 or more	(5H+120) or more
For 400 to 800 A frames	0 or more	(5H+85) or more	0 or more	(4H+120) or more
For 1000 to 1600 A frames	0 or more	(8H+150) or more	0 or more	(4H+120) or more

Remarks: 1. The handle is opened and closed in the projection area of the handle and does not run over the projection area of the circuit breaker (except when the auxiliary handle is provided.)
2. When the operating handle is fitted to NV, the test button cannot be pressed easily. If necessary, use a circuit breaker with TBL or TBM. When using an Earth Leakage Alarm Breaker, use the externally resetting type (ECA-SLT RST) or automatically resetting type (ARS).

●Dimensional drawings of front plate drilling

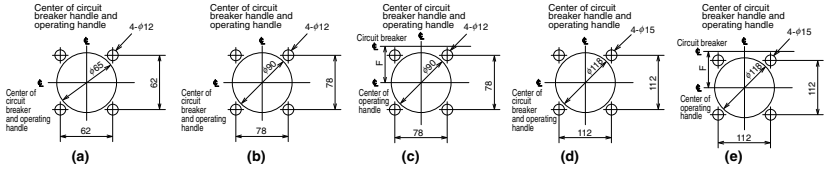

(a) (b) (c) (d) (e)

●Dimensional drawings of circuit breaker mounting holes

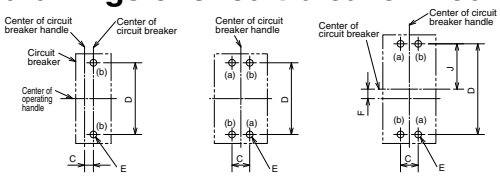

(f) (g) (h)

●Door lock withstand load

	F(N)	L(mm)
F-05~F-2	500	50
F-4~F-8		68

Table 6-20 Summary of dimensions

Type name	Door opening position: OFF position	Door opening position: Reset position	Applicable model: MCCB	MCCB: Number of poles	Applicable model: ELCB	ELCB: Number of poles	Reference drawing: Dimensional drawing	Reference drawing: Drilling plan		Dimensions (mm): A (*1)	B	C	D	E	F	G	J	Trip button position (*4)	Mounting screw
F-05SV2 F-05SVE2	–	○	NF32-SV NF63-CV, NF63-SV, NF63-HV	2P	–	–	Fig. 1	b	f	105	104	13	111	M4 screw or $\phi5$	–	–	–	N	(a) Circuit breaker mounting screw (2 pcs.) (b) Circuit breaker handle mounting screw (2 pcs.) F-05SV2 F-05SVE2 F-1SV2 F-1SVE2 F-05SRUL2 F-03SVUL2 F-05SVUL2 Only the screws (b) are used for the following models.
F-05SV F-05SVE (*2)	–	○	NF32-SV NF63-CV, NF63-SV, NF63-HV	3P • 4P	NV32-SV NV63-CV, NV63-SV, NV63-HV	2P • 3P			g			25						L	
F-1SV2, F-1SVE2	–	○	NF125-CV, NF125-SV	2P	–	–		b	f	105		15			–		–	N	
F-1SV F-1SVE	–	○	NF125-CV, NF125-SV NF125-HV, NF125-SXV	3P • 4P 2P • 3P • 4P	NV125-CV, NV125-SV, NV125-HV	3P • 4P			g			30						L	
F-1UV, F-1UVE	–	○	NF125-UV	2P • 3P • 4P	–	–		c	h				172		31		86	L	
F-2SV F-2SVE	–	○	NF125-LXV/HXV/SEV/HEV NF125-SGV/LGV/HGV/RGV NF160-SGV/LGV/HGV NF250-CV/SV/HV/SXV/LXV/HXV NF250-SGV/LGV/HGV/RGV NF250-SEV/HEV	2P • 3P • 4P	NV125-SEV, NV125-HEV NV250-CV, NV250-SV, NV250-HV NV250-SEV, NV250-HEV	3P • 4P		b	f	107		35	126		–		–	K	
F-2UV, V-2UVE	–	○	NF250-UV	2P • 3P • 4P	–	–		c	h				201		38		100.5	K	
F-1SVUL	–	○	NF125-SVU, NF125-HVU	3P	NV125-SVU, NV125-HVU	3P		c	h	105		30	123		6		61.5	L	
F-2SVUL	–	○	NF250-SVU, NF250-HVU	3P	NV250-SVU, NV250-HVU	3P		b	g	107		35	126					K	
F-03SVUL2	–	○	NF50-SVFU	2P	NV50-SVFU	2P		a	f	105	80	9	82.5		–		–	M	
F-03SVUL	–	○		3P		3P			g			18							
F-05SVUL2	–	○	NF100-CVFU	2P	–	–		b	f		104	13	111					N	
F-05SVUL	–	○		3P	NV100-CVFU	3P			g			25						L	
F-2SUL	–	○	NF225-CWU	3P	–	–		b	g	107	104	35	126					–	
F-4S F-4SE	–	○	NF400-CW, SW, SEW, HEW, REW NF630-CW, SW, SEW, HEW, REW	2P, 3P, 4P	NV400-CW, SW, SEW, HEW, REW NV630-CW, SW, SEW, HEW	3P, 4P	Fig. 2	d	g	183	–	44	194	M6 screw or $\phi7$	–	–	–	–	(a)(b) Circuit breaker mounting screw (4 pcs.)
F-4U F-4UE	–	○	NF400-UEW	3P	–	–		e	h	280			234		20				
F-8S F-8SE	–	○	NF800-CEW, SDW, SEW NF800-HEW, REW	2P, 3P, 4P	NV800-SEW, HEW	3P		d	g	183		70	243		–				
F-8U F-8UE	–	○	NF800-UEW NF400-UEW(4P)	3P, 4P	–	–		e	h	280			290		23.5				
F-4SUL	–	○	NF400-SWU/HWU	3P	–	3P		d	g	183		44	194		–				
F-6SUL	–	○	NF630-SWU/HWU	3P	–	–						70	243						
F10SW (*3)	–	○	NF1000-SEW NF1250-SEW/SDW NF1600-SEW/SDW	2P, 3P	–	–	Fig. 3	d	g	221	–	70	375	M8 screw or $\phi10$	–	200			
F10SW4P (*3)				4P															

Notes *1 The dimensions for the front connection type are shown. On some models of the rear connection type and plug-in type, the reference surface for mounting the circuit breaker may change.
*2 For the 4-pole plug-in type, a special handle is required. Consult us for details.
*3 If a handle which can be locked only in the OFF position is required, specify so.
*4 The circuit breaker can be tripped by operating the trip button while the door is open.
*5 Do not remove the sponge packing used to secure the protection class IP51. Fit the supplied packing without fail.
*6 The handle cannot be used when the circuit breaker is installed on IEC 35-mm rails.

Remarks: 1. The handles with E in their model names are designed for emergency stop devices. Their delivery category is ●.
2. The standard handles are Reset Open Type which can open the doors only when they are reset to open. OFF Open type handles which can open the doors when they are in the OFF position can be manufactured to order.
3. A handle which can be operated and can indicate the ON and OFF positions in the same manner as the standard models even if the circuit breaker is installed horizontally can be manufactured to order.
4. F10SW and higher models do not conform to the isolation function.
5. Handles which are opened and closed in the OFF position can be opened also in the reset position.

●Installation procedure

For details, please refer to Operating Handle Installation Manual supplied with the product.

① Installation to a breaker

Install the operating handle to the circuit breaker in accordance with the following procedure.

Installation procedure

250A frame and below

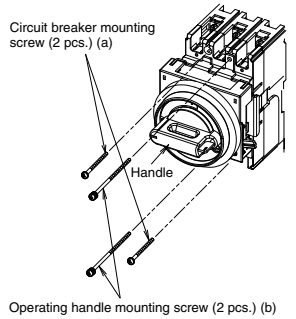

(Installation procedure)

① Install the circuit breaker on the panel with the two circuit breaker mounting screws through the holes (a).
② Install the operating handle with the supplied two operating handle mounting screws through the holes (b).

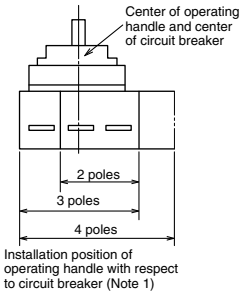

(In the case of F-05SV2, F-1SV2, F-05SRUL2, F-05SUL2 and F-1SUL2)

Tighten the circuit breaker and operating handle together with the supplied two operating handle mounting screws.

400 to 1600A frames

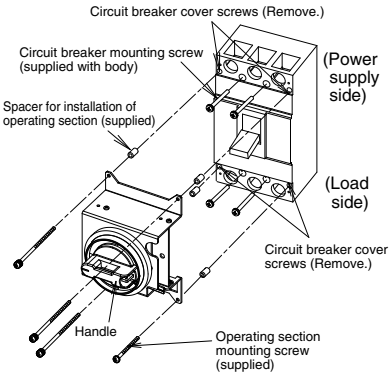

(In the case of F-4S to F-6SUL)
The operating handle mounting screws are tapping screws without washers or spring washers.

(Installation procedure)

① Remove the circuit breaker cover screws in the same positions as the operating handle mounting holes.
② Install the circuit breaker with the four circuit breaker mounting screws.
③ Fit the spacer(s) for installation of operating handle between the circuit breaker and operating handle. (The number of the spacers varies depending on the model.)
④ Install the operating handle with the supplied operating handle mounting screws.

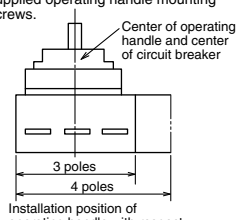

Note *1 In the case of F-05SRUL2, the center of the operating handle is the same as the center of the circuit breaker.

② Installation of decorative board and retaining board

Drill holes in the door according to the drilling size shown on the previous page, and tighten the decorative board and retaining board with the supplied countersunk screws. In the case of 800A frame or below, fit the supplied packing to the position shown right.

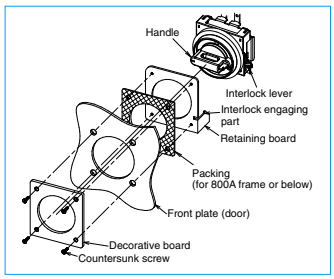

●Door locking mechanism

The panel door can be opened only when the operating handle is operated to open (reset). (On F-4S to F10SW, the door lock is held in the released state even if the handle is returned to OFF.) The door can be opened when the handle is in the ON position if the release knob is operated with a tool.

●Operation locking mechanism

Circuit breakers with a frame size of 800A or below can be locked by setting the handle in the OFF position. (Operating handles which can lock circuit breakers in the ON or OFF position can be manufactured.) Operate the locking part, and lock the handle with padlocks. Up to three padlocks can be fitted.
Lockout hasps (scissors locks) can be used.
If the circuit breaker trips even when the operating handle is locked in the ON position, also the operating handle indicates that it has tripped.

[F-2SUL or below: Only when one 35-mm padlock (weighing 70 g or less) is used
F-4S or above: Only when one 40-mm padlock (weighing 100 g or less) is used]

To 800A frame or below, padlocks with dimension C of 3 mm to 8 mm can be applied.
For 1000A or above, padlocks with dimension of 3 mm to 6 mm can be applied. (When using padlocks of 3 mm or less, please consult us.)

●Circuit breaker installation direction (except UL 489 listed circuit breakers)

We can supply circuit breakers on which the handles and their ON and OFF positions are in the same directions as on vertically installed circuit breakers even when they are installed horizontally. The door drilling size is identical. If you intend to install an operating handle on a horizontally installed circuit breaker, specify "Y" (horizontal installation with power supply on the left) or "Z" (horizontal installation with power supply on the right) at the end of the model name. (Ex.: F-4S Y)

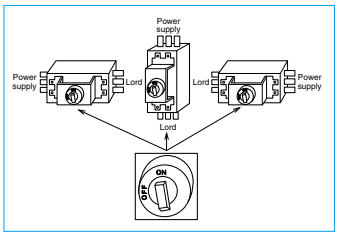

●Sealing of release knob

The use of an optional part, Release Protection "F-RCS", can prevent the panel door being opened by operating the release knob. (800A frame or below)

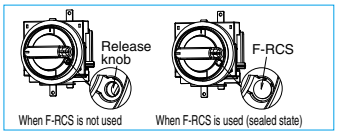

●Operation Lock Devices

(1) Padlock

Padlock Dimensions

Use commercially available padlocks. (mm)

Applicable model	A (Nominal size)	B
All models	35	5 or less
	40	6 or less

Dimension C: Maximum 8mm.

(2) Lockout Devices (Scissors Lock)

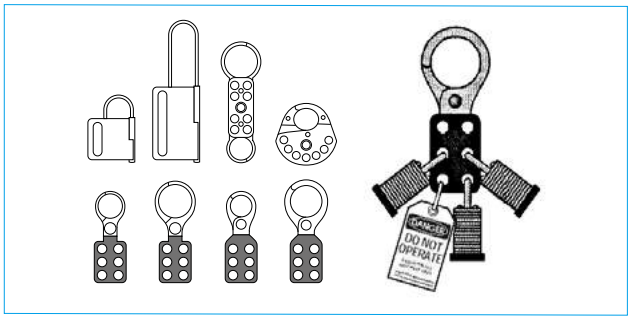

●How to order

For 800A frame or below, specify the following specification symbols together with the model name.

- Operation lock: LF ····· Lock in OFF position
- Operation lock: LN ····· Lock in ON or OFF position
- Door opening: DR ····· Reset to open
- Operation lock: DF ····· Open in OFF position
- Installation direction: Blank ··· Power supply upward
- Installation direction: Y ····· Power supply on left
- Operation lock: Z ····· Power supply on right

For a standard product with a frame size of 1000A or above, specify the model name. When it is required to enable the operation lock only in the OFF position, specify the model name and "only lock in OFF position."
If you intend to seal the release knob, place an order for the release protection. (Lot: 10 pcs.)

●Interpretation of model name

(1) For 800A frame or below

F – 1 SV UL E 2
1) 2) 3) 4) 5) 6)

1) F: Operating handle type name
2) 1: Circuit breaker group (0.5, 1, 2, 4, 6 or 8)
3) SV: Classification of circuit breaker (S, SV, H, U, UV, SR or SG)
4) UL: Blank···General product UL···UL 489 listed product
5) E: Blank···Standard E···For emergency stop
6) 2: Blank···3P or 4P 2···2P

(2) For 1000A frame or above

F 10 SW 4P
1) 2) 3) 4)

1) F: Operating handle type name
2) 4: Circuit breaker A frame (10 or 120)
3) SW: Series name
4) 4P: Number of poles (4P) * Not indicated for 3P

2. V-Type Operating Handle

Operating handle of door mount type consisting of operating section to be mounted on circuit breaker body and operating handle on panel door

- The handle provides an isolation function in combination with the circuit breaker body.
- Conforming to the safety regulations of EN Standard (EN 60204-1)
- Protection class (IEC 60529) IP65 as standard
- The handle can be locked only in the OFF position with up to three commercially available padlocks (35 mm or 40 mm).
- The panel door can be opened in the OFF position. In the ON and trip positions, the panel door is locked and cannot be opened. However, the door can be opened even in the ON and trip positions by operating the release part with a tool.

●Appearance (Color: Munsell N1.5)

●Outline drawings

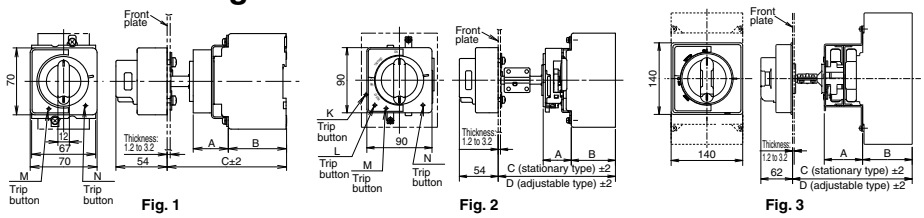

Fig. 1 Fig. 2 Fig. 3

Note Auxiliary handles (F-HT) are provided for V-4S ~ V-6SUL as option.

●Center of hinge and breaker

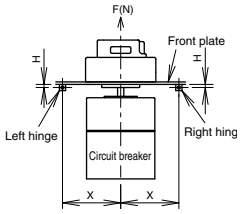

Relationship between hinges and circuit breaker viewed from load side of circuit breaker

	H	X
For 30 to 250 A frames	0 or more	5H+100 or more
For 400 to 800 A frames		8H+150 or more

* The above figure shows the relationship viewed from the load side.

●Dimensional drawings for front plate drilling

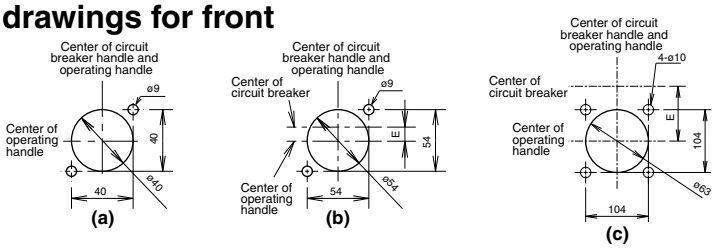

(a) (b) (c)

●Door lock withstand load

	F(N)
30 to 800A frames	200

●Dimensional drawings of circuit breaker mounting holes

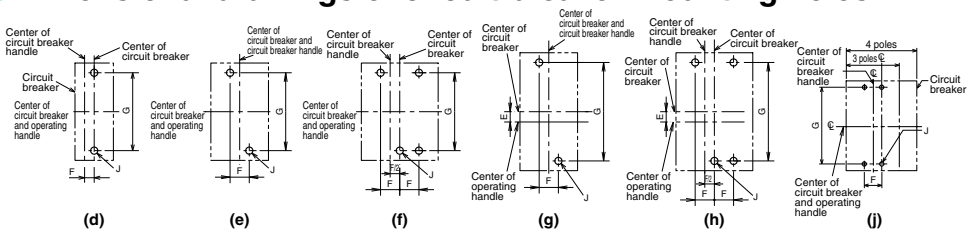

(d) (e) (f) (g) (h) (j)

Table 6-21 Summary of dimension

Type name: Stationary type	Type name: Adjustable type	Applicable model: MCCB	Number of poles	Applicable model: ELCB	Number of poles	Reference drawing: Dimensional drawing	Reference drawing: Drilling plan		Dimensions (mm): A	B	C (Stationary type)	D (min) (Adjustable type(*2))	D (max) (Adjustable type(*2))	E	F	G	J	Trip button position (*5)
V-05SV2 V-05SVE2	(*1) Adjusting unit V-AD3S is mounted on stationary type.	NF32-SV NF63-CV, NF63-SV, NF63-HV	2P	–	–	Fig. 2	b	d	39	61	125	–	–	–	12.5	111	M4 screw or ϕ5	N
V-05SV V-05SVE		NF32-SV NF63-CV, NF63-SV, NF63-HV	3P	NV32-SV NV63-CV, NV63-SV, NV63-HV	2P, 3P			e				162	300		25			L
			4P	–	–													
V-1SV2, V-1SVE2		NF125-CV, NF125-SV	2P	–	–			d				–	–	–	15			N
V-1SV V-1SVE		NF125-CV, NF125-SV	3P	NV125-CV, NV125-SV, NV125-HV	3P			e				162	300		30			L
			4P		4P			f										
		NF125-HV, NF125-SXV	2P, 3P	–	–			e										
			4P					f										
V-1UV V-1UVE		NF125-UV	2P, 3P	–	–			g	39					30.5		172		
			4P					h										
V-2SV V-2SVE		NF125-LXV/HXV/SEV/HEV NF125-SGV/LGV/HGV/RGV NF160-SGV/LGV/HGV NF250-CV/SV/HV/SXV/LXV/HXV NF250-SGV/LGV/HGV/RGV NF250-SEV/HEV	2P, 3P	NV125-SEV, NV125-HEV NV250-CV, NV250-SV, NV250-HV NV250-SEV, NV250-HEV	3P			e	41					–	35	126		K
			4P		4P			f										
V-2UV V-2UVE		NF250-UV	2P, 3P	–	–			g						37.5		201		
			4P					h										
V-03SVUL2	–	NF50-SVFU	2P	NV50-SVFU	2P	Fig. 1	a	d	39	61	125	–	–	–	9	82.5	M4 screw or ϕ5	M
V-03SVUL			3P		3P			e							18			N
V-05SVUL2	(*1) Adjusting unit V-AD3S is mounted on stationary type.	NF100-CVFU	2P	–	–	Fig. 2	b	d	39	61	125	–	–	–	12.5	111		N
V-05SVUL			3P	NV100-CVFU	3P			e				162	300		25			L
V-1SVUL		NF125-SVU, NF125-HVU	3P	NV125-SVU, NV125-HVU	3P	Fig. 2	b	g	39	61	125	162	300	6	30	123		L
V-2SVUL		NF250-SVU, NF250-HVU	3P	NV250-SVU, NV250-HVU	3P			e	41					–	35	126		K
V-2SUL		NF225-CWU	3P	–	3P					61	125	162	300		35	126		–
V-4S V-4SE	(*1) Adjusting unit V-AD3L is mounted on stationary type.	NF400-CW/SW/SEW/HEW/REW NF630-CW/SW/SEW/HEW/REW	2P, 3P, 4P	NV400-CW/SW/SEW/HEW/REW NV630-CW/SW/SEW/HEW	3P, 4P	Fig. 3	c	j	76	97	191	233	300	–	44	194	M6 screw or ϕ7	–
V-4U V-4UE		NF400-UEW	3P	–	–			h		194	288	330	397	20		234		
V-8S V-8SE		NF800-CEW/SDW/SEW/HEW/REW	2P, 3P, 4P	NV800-SEW/HEW	3P			j		97	191	233	300	–	70	243		
V-4SUL		NF400-SWU/HWU	3P	–	3P										44	194		
V-6SUL		NF630-SWU/HWU	3P	–	–										70	243		

Notes
*1 For the adjustable type, purchase the optional adjusting unit V-AD3S or V-AD3L.
*2 The dimensions of the adjustable type models provided with the adjusting unit V-AD3S or V-AD3L are shown.
*3 When using the operating handle for a plug-in type model with a frame size of 250A or below, specify so.
*4 The dimensions on the front connection type are shown. For the rear connection and plug-in types, separately consult us.
*5 The circuit breaker can be tripped by operating the trip button while the door is open. (The trip button position varies depending on the model.)
*6 The handle cannot be used when the circuit breaker is installed on IEC 35-mm rails.

Remarks
1. The products whose model names contain E are designed for emergency stop. The delivery category is ●. That of V-05SVE is ●.
2. When the operating handle is fitted to NV, the test button cannot be pressed easily. If necessary, use a circuit breaker with TBL or TBM. When using an Earth Leakage Alarm Breaker, use the externally resetting type (ECA-SLT) or automatically resetting type (ARS).

●Installation procedure

For details, please refer to Operating Handle Installation Manual supplied with the product.

① Installation to a breaker

Install the operating handle to the circuit breaker in accordance with the following procedure.

	250A frame and below	400 to 800A frames
Installation procedure	**(Installation procedure)** ① Operating handle for 3- or 4-pole circuit breaker Set the rotary plate of the operating section to the OFF (symbol O) position, and fit the plate to the circuit breaker with the supplied operating section mounting screws and nuts. Install the circuit breaker to the panel with the circuit breaker mounting screws (2 pcs.). ② Operating handle for 2-pole circuit breaker Install the operating section together with the circuit breaker to the panel with the supplied operating section mounting screws (2 pcs.) 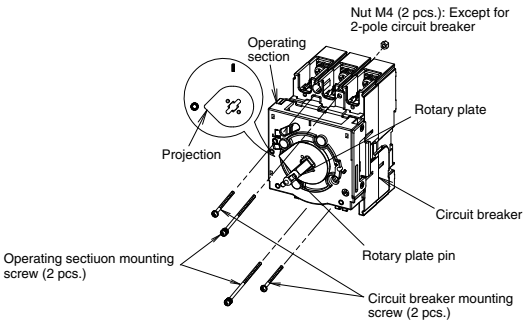 	**(Installation procedure)** ① Remove the circuit breaker cover screws (4 pcs.) in the same positions as the operating handle mounting holes. ② Install the circuit breaker with the circuit breaker mounting screws (4 pcs.). ③ Fit the supplied operating section mounting spacers (4 pcs.) between the circuit breaker and operating handle. ④ Set the rotary plate to the OFF (symbol O) position, and install the operating section to the circuit breaker with the supplied operating section mounting screws. 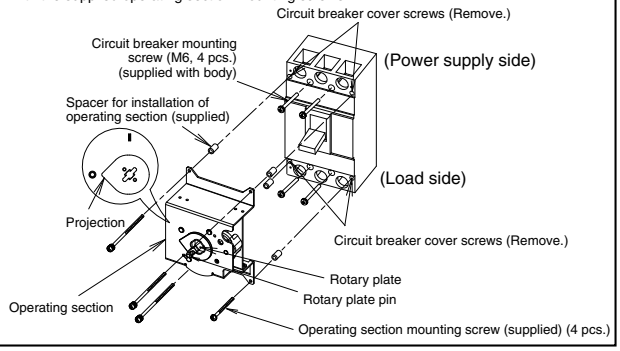

② Installation of operating handle section

Drill a hole in the door according to the dimensional drawing for front plate drilling given on the previous page, and install the operating handle section in accordance with the following procedure.

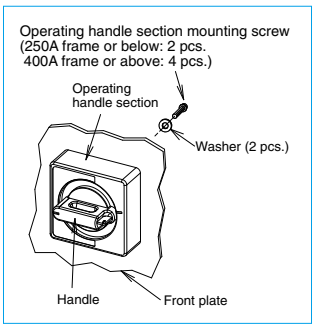

- Tighten the operating handle section from the back of the front plate. Temporarily tighten the screws to center the section in the hole.
- Set the handle of the operating handle section to the OFF state, tighten the front plate, and make sure that the handle can be smoothly turned to the ON and OFF positions. Turn the handle to the right and left in the OFF state, and make sure that OFF is displayed. If OFF is not displayed, move the operating handle section up and down and to the right and left for adjustment. (Take care that the operating handle section is in parallel with the circuit breaker.) Then, open the front plate, and finally tighten the screws.

Note The adjusting unit is not applicable to 2-pole external type circuit breakers. If it is used on a 2-pole external type circuit breaker, the positions may not be correctly displayed.

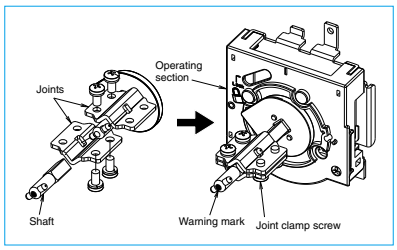

Make adjustments with the adjusting unit as stated below.

①External dimension drawing

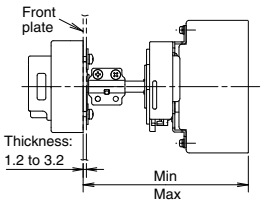

②Calculation of shaft cutting allowance

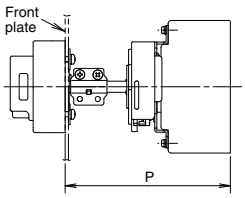

Type name	Dimensions (mm) Min	Dimensions (mm) Max	Cutting allowance	Calculation
V-05SV V-05SVUL V-1SV V-1SVUL V-1SUL V-2SV V-2SVUL V-2SUL	162	300	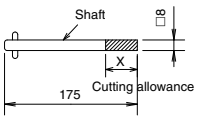	(Cutting allowance)(P max)(panel size) X = 300 mm - P
V-2SGUL	180	318		
V-4S V-8S V-4SUL V-6SUL	233	300	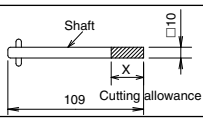	

Note The unit is applicable to operating handles for emergency stop (E).

●Door locking mechanism

The operating handle is provided with an interlock mechanism to prevent the door opening in the ON and TRIP positions. In the OFF position, the door can be opened. However, the door can be opened in the ON or TRIP position by pressing the release knob in the arrow direction with a tool (3 mm wide and 1.8 mm thick).

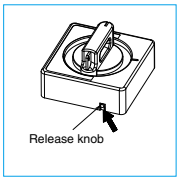

●Operation locking mechanism

① Operating handle section

Operation lock can be set only in the OFF Position. Up to three commercially available padlocks (A = 35 or 40 mm) can be fitted. Lockout hasps (scissors locks) can be used. When the operating handle section is locked with padlocks, also the door is locked.

② Operating section

The operating section can be locked so that the circuit breaker will not be turned on carelessly when the inside of the panel is inspected with the panel door open. Fit a padlock through the hole in the operating section of the operating handle.

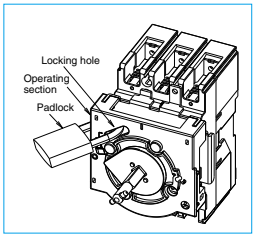

●Adjusting unit

The height from the circuit breaker mounting surface to the panel door can be adjusted by fitting the optional adjusting unit V-AD3S or V-AD3L. Cut the shaft of the adjusting unit according to the height.

●Padlocks

The user must prepare padlocks.
The dimensions of the padlocks are the same as those shown on page 129.

●How to order

Specify the model name of the operating handle.
For adjustable type, place an order for the adjustment unit. (One lot includes 1 pc.)
250A frame or below: V-AD3S
400 to 800A frames: V-AD3L

●Interpretation of model name

(1) For 800A frame or below

V – 1 S UL E 2
1) 2) 3) 4) 5) 6)

1) V: Operating handle type name
2) 1: Circuit breaker group (0.5, 1, 2, 4, 6 or 8)
3) S: Classification of circuit breaker (S, SV, H, U, UV)
4) UL: Blank···General product UL···UL 489 listed product
5) E: Blank···Standard E···For emergency stop
6) 2: Blank···3P or 4P 2···2P

3. Terminal Covers

The terminal covers are used to avoid exposure of live parts. Many kinds of terminal covers, including large terminal covers (TC-L), small terminal covers (TC-S), transparent terminal covers (TTC), rear terminal covers (BTC) and plug-in terminal covers (PTC), for various models and applications are available, and they are helpful. (The terminal covers cannot be fitted to electrically operated circuit breakers of spring charged type (2) and motor-drive type (2). The standard terminal covers can be used for the spring charged type (1). For the motor-drive type, special terminal covers can be manufactured. Consult us for details.)

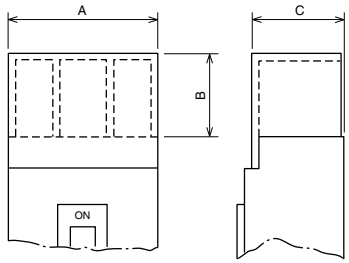

TC-L TC-S TTC

●Quick terminal covers

These covers are very convenient because they can be fitted only by inserting them into the mounting holes in the circuit breaker body. To remove the terminal cover, shift the projections of the terminal cover with the tip of a slotted screwdriver or finger, and draw it out.

●Table of variable dimensions

Table 6-22 Large terminal covers (TC-L)

Type name	Color	Number of poles of circuit breaker	Applicable model		Dimensions (mm)			Contents			Appearance	Remarks
			MCCB	ELCB	A	B	C	Number of covers	Cover mounting screw	Sealing plate		
TCL-03CS2W	White	2	NF30-CS	– (*1)	43.5	25	30.5	2	–	2	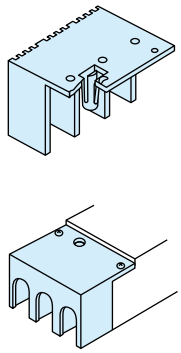 Quick type The cover can be sealed with the sealing plate.	
TCL-03CS3W	White	3		–	67	25	30.5	2	–	2		
TCL-05SV2 (*2)(*8)	White	2	NF32-SV NF63-CV/SV/HV	–	50	25	65.5	2	–	2		
TCL-05SV2L (*2)(*9)	White	2	NF32-SV NF63-CV/SV/HV	–	50	40	65.5	2	–	2		
TCL-05SV3 (*3)(*8)	White	3	NF32-SV NF63-CV/SV/HV	NV32-SV, NV63-HV	75	25	65.5	2	–	2		
	White	2, 3	–	NV63-CV/SV								
TCL-05SV3L (*3)(*9)	White	3	NF32-SV, NF63-CV/SV/HV	NV32-SV, NV63-HV	75	40	65.5	2	–	2		
	White	2, 3	–	NV63-CV/SV								
TCL-05SV4 (*3)	White	4	NF63-SV/HV	–	100	25	65.5	2	–	2		
TCL-1SV2 (*2)	White	2	NF125-CV/SV	–	60	40	65.5	2	–	2		
TCL-1SV3 (*3)	White	3	NF125-CV/SV	NV125-CV/SV/HV	90	40	65.5	2	–	2		
	White	2, 3	NF125-HV/UV/SXV	–								
TCL-1SV4 (*3)	White	4	NF125-SV/HV/UV/SXV	NV125-SV/HV	120	40	65.5	2	–	2		
TCL-2SV3 (*3)(*10)	White	2, 3	NF125-LXV/HXV NF250-SXV/LXV/HXV NF125-SGV/LGV/HGV/RGV NF160-SGV/LGV/HGV NF250-SGV/LGV/HGV/RGV NF250-CV/SV/HV/UV, NF250-SEV/HEV NF125-SEV/HEV	NV250-CV/SV/HV NV250-SEV/HEV NV125-SEV/HEV	105	40	65.5	2	–	2		
	White	3	(*6)									
TCL-2SV3L (*3)(*11)	White	2, 3	NF125-LXV/HXV NF250-SXV/LXV/HXV NF125-SGV/LGV/HGV/RGV NF160-SGV/LGV/HGV NF250-SGV/LGV/HGV/RGV NF250-CV/SV/HV/UV, NF250-SEV/HEV NF125-SEV/HEV	NV250-CV/SV/HV NV250-SEV/HEV NV125-SEV/HEV	105	50	65.5	2	–	2		
TCL-2SV4 (*3)(*5)	White	4	NF125-SXV/LXV/HXV NF250-SXV/LXV/HXV NF250-SV/HV/UV NF250-SEV/HEV NF125-SEV/HEV (*6)	NV250-SV/HV NV250-SEV/HEV NV125-SEV/HEV	140	40	65.5	2	–	2		
TCL-4SW3 (*3)	White	2, 3	NF400-CW/SW/SEW NF630-CW/SW/SEW	NV400-CW/SW/SEW NV630-CW/SW/SEW	171	110	99.5	2	–	2		
	White	3	NF400-SEP with MDU (*7)	–								
			NF400-UEW (*4)	–	171	110	132.5/196.5	2	–			
TCL-4SW4 (*3)	White	4	NF400-SW/SEW/HEW NF630-SW/SEW NF400-SEP with MDU (*7)	NV400-SEW/HEW NV630-SEW	240	110	105	2	6	–	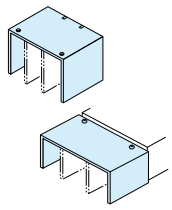 Screw type	Use in combination with insulating barrier.
TCL-8SW3 (*3)	White	2, 3	NF800-CEW/SDW/SEW/HEW/REW	NV800-SEW/HEW	224	155	103.5	2	4	–		
	White	3	NF600-SEP with MDU/HEP with MDU (*7) NF800-SEP with MDU/HEP with MDU (*7)	–								
TCL-8UW3	Transparent	3	NF800-UEW (*4)	–	220	155	146/194.5	2	4	–		
TCL-8SW4 (*3)	White	4	NF800-SEW/HEW NF600-SEP with MDU/HEP with MDU (*7) NF800-SEP with MDU/HEP with MDU (*7)	–	294	155	103.5	2	6	–		
TCL-8UW4	Transparent	4	NF400-UEW, NF800-UEW (*4)	–	290	155	146/194.5	2	6	–		
TCL-10SW3	Transparent	3	NF1000-SEW NF1250-SEW/SDW	–	220	150	139	2	4	–		
TCL-10SW4	Transparent	4	NF1000-SEW NF1250-SEW/SDW	–	290	150	139	2	4	–		
TCL-03SVU2 (*3)	White	2	NF50-SVFU	NV50-SVFU	36	30	65.5	2	–	–	Quick type (Remove the existing cover from the body, and fit the terminal cover.)	
TCL-03SVU3 (*3)	White	3	NF50-SVFU	NV50-SVFU	54	30	65.5	2	–	–		
TCL-05SVU2 (*2)(*8)	White	2	NF100-CVFU	–	50	25	65.5	2	2	–	Screw type	
TCL-05SU2L (*2)(*9)	White	2	NF100-CVFU	–	50	40	65.5	2	2	–		
TCL-05SVU3 (*3)(*8)	White	3	NF100-CVFU	NV100-CVFU	75	25	65.5	2	2	–		
TCL-05SVU3L (*3)(*9)	White	3	NF100-CVFU	NV100-CVFU	75	40	65.5	2	2	–		
TCL-1SVU3 (*3)	White	2, 3	NF125-SVU	–	90	40	65.5	2	2	–	Screw type (Remove the existing cover from the body, and fit the terminal cover.)	
		3	NF125-HVU	NV125-SVU/HVU								
TCL-2SVU3 (*3)(*10)	White	3	NF250-SVU/HVU	NV250-SVU/HVU	105	40	65.5	2	2	–	Screw type (Remove the existing cover from the body, and fit the terminal cover.)	
TCL-2SVU3L (*3)(*11)	White	3	NF250-SVU/HVU	NV250-SVU/HVU	105	50	65.5	2	2	–	Screw type (Remove the existing cover from the body, and fit the terminal cover.)	
TCL-2SWU3 (*10)	White	3	NF225-CWU	–	105	40	65.5	2	–	–	Quick type (Remove the existing cover from the body, and fit the terminal cover.)	
TCL-2SWU3L (*3)(*11)	White	3	NF225-CWU	–	105	50	65.5	2	–	–	Quick type (Remove the existing cover from the body, and fit the terminal cover.)	
TCL-4SWU	White	3	NF400-SWU/HWU	–	171	110	99.5	2	–	2	Quick type	
TCL-6SWU	Transparent	3	NF630-SWU/HWU	–	224	155	103.5	2	4	–	Screw type	Use in combination with insulating barrier.

Notes
*1 For 2-pole NV, use TC-L for 3-pole circuit breaker.
*2 For a circuit breaker with F or V type operating handle, specify the model name with F at the end. (F or V type operating handle dedicated models, screws are used for fixing.)
*3 The standard models can be used in combination with F and V Type Operating Handles.
*4 The dimension C is the size on the power supply side and load side.
*5 When a crimp terminal applicable to wires with a size of 117.2 to 152.05 mm^2 (Model 2CR-150 or CB150-S8) is used, TC-L cannot be fitted. Insulate the terminal from TC-S with insulating tube or taping.
*6 In the case of installation on the body, specify the model name with-MDU at the end.
*7 It cannot be installed in the case of installation on the body.
*8 Applicable to circuit breakers with rating of 75A or less (max. wire size 25 mm^2)
*9 Applicable to circuit breakers with rating of 125A or less (max. wire size 60 mm^2)
*10 Applicable to circuit breakers with rating of 200A or less (max. wire size 100 mm^2)
*11 Applicable to circuit breakers with rating of 250A or less (max. wire size 150 mm^2) (Applicable to UL wire 300MCM)

Remarks
1. The wire sizes shown in the above notes *10 to *13 are those of the 600-V vinyl insulated wires.
2. Insulate the exposed live parts of crimp terminals with insulating tape or the like.
3. When protection from the power supply and load sides is necessary, separately consult us.

Table 6-23 Small terminal covers (TC-S)

Type name	Color	Number of poles of circuit breaker	Applicable model		Dimensions (mm)			Contents			Appearance	Remarks
			MCCB	ELCB	A	B	C	Number of covers	Cover mounting screw	Sealing plate		
TCS-03CS2W	White	2	NF30-CS	–	43.5	5	30.5	2	–	2	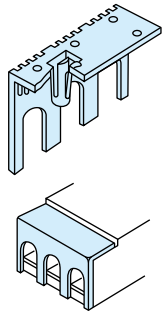 Quick type The cover can be sealed with the sealing plate.	
TCS-03CS3W	White	3		–	67	5	30.5	2	–	2		
TCS-05SV2 (*1)	White	2	NF32-SV, NF63-CV/SV/HV	–	50	5	65.5	2	–	2		
TCS-05SV3 (*2)	White	3	NF32-SV, NF63-CV/SV/HV	NV32-SV, NV63-HV	75	5	65.5	2	–	2		
	White	2, 3	–	NV63-CV/SV								
TCS-1SV2(*2)	White	2	NF125-CV/SV	–	60	6.5	65.5	2	–	2		
TCS-1SV3(*3)	White	3	NF125-CV/SV	NV125-CV/SV/HV	90	6.5	65.5	2	–	2		
	White	2, 3	NF125-HV/UV/SXV	–								
TCS-2SV3 (*2)	White	2, 3	NF125-LXV/HXV NF250-SXV/LXV/HXV NF125-SGV/LGV/HGV/RGV NF160-SGV/LGV/HGV NF250-SGV/LGV/HGV/RGV NF250-CV/SV/HV/UV, NF250-SEV/HEV NF125-SEV/HEV	NV250-CV/SV/HV NV250-SEV/HEV NV125-SEV/HEV	105	6.5	65.5	2	–	2		

Notes *1 For a circuit breaker with F type operating handle, specify the model name with F at the end.
(F type operating handle dedicated models, screws are used for fixing.)
*2 The standard models can be used in combination with F and V Type Operating Handles.

Remarks 1.Small terminal covers for 4-pole circuit breakers are available.
2.Insulate the exposed live parts of crimp terminals with insulating tape or the like.

Table 6-24 Transparent terminal covers (TTC)

Type name	Number of poles of circuit breaker	Applicable model		Dimensions (mm)			Contents			Appearance	Remarks
		MCCB	ELCB	A	B	C	Number of covers	Cover mounting screw	Sealing plate		
TTC-03CS2	2	NF30-CS	–	43.5	25	30.5	2	–	2	Transparent 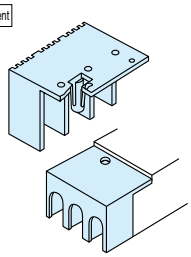 Quick type The cover can be sealed with the sealing plate.	
TTC-03CS3	3		–	67	25	30.5	2	–	2		
TTC-05SV2 (*1)	2	NF32-SV NF63-CV/SV/HV	–	50	25	65.5	2	–	2		
TTC-05SV3 (*2)	3	NF32-SV NF63-CV/SV/HV	NV32-SV, NV63-HV	75	25	65.5	2	–	2		
	2, 3	–	NV63-CV/SV								
TTC-1SV2 (*1)	2	NF125-CV/SV	–	60	40	65.5	2	–	2		
TTC-1SV3 (*2)	3	NF125-CV/SV	NV125-CV/SV/HV	90	40	65.5	2	–	2		
	2, 3	NF125-HV/UV/SXV	–								
TTC-2SV3 (*2)(*3)(*5)	2, 3	NF125-LXV/HXV NF250-SXV/LXV/HXV NF125-SGV/LGV/HGV/RGV NF160-SGV/LGV/HGV NF250-SGV/LGV/HGV/RGV NF250-CV/SV/HV/UV, NF250-SEV/HEV NF125-SEV/HEV	NV250-CV/SV/HV NV250-SEV/HEV NV125-SEV/HEV	105	40	65.5	2	–	2		
	3	–	–								
TTC-4SW3	2, 3	NF400-CW/SW/SEW NF400-HEW/REW NF630-CW/SW/SEW NF630-HEW/REW	NV400-CW/SW/SEW NV400-HEW/REW NV630-CW/SW/SEW NV630-HEW	171	110	104.5	2	4	–		
	3	NF400-SEP with MDU/HEP with MDU(*4)	–								
TTC-4SW4	4	NF400-SW/SEW/HEW NF630-SW/SEW/HEW NF400-SEP with MDU/HEP with MDU(*4)	NV400-SEW/HEW NV630-SEW	240	110	104.5	2	6	–	Transparent 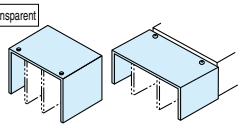 Screw type	Use in combination with insulating barrier.
TTC-8SW3	2, 3	NF800-CEW/SDW/SEW NF800-HEW/REW	NV800-SEW/HEW	224	155	103.5	2	4	–		
	3	NF600-SEP with MDU/HEP with MDU (*4) NF800-SEP with MDU/HEP with MDU (*4)	–								
TTC-8SW4	4	NF800-SEW/HEW NF600-SEP with MDU/HEP with MDU (*4) NF800-SEP with MDU/HEP with MDU (*4)	–	294	155	103.5	2	6	–		

Notes *1 For a circuit breaker with F type operating handle, specify the model name with F at the end.
(F type operating handle dedicated models, screws are used for fixing.)
*2 The standard models can be used in combination with F and V Type Operating Handles.
*3 When a crimp terminal applicable to wires with a size of 117.2 to 152.05 mm^2 (Model 2CR-150 or CB150-S8) is used, TTC cannot be fitted.
Use TCL-2SV3L. Or insulate the terminal from TC-S with insulating tube or taping.
*4 In the case of installation on the body, specify the model name with • MDU at the end.
*5 Applicable to circuit breakers with rating of 200A or less (max. wire size 100 mm^2)

<BTC>

Fig. 1

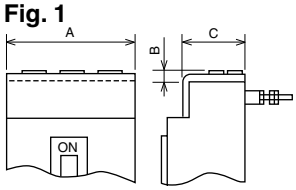

Fig. 2

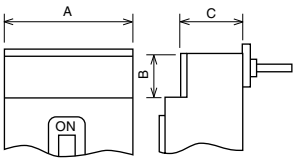

<PTC>

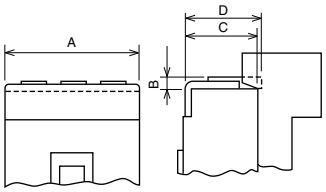

Table 6-25 Rear terminal cover (BTC)

Type name	Color	Number of poles of circuit breaker	Applicable model		Dimensions (mm)			Contents			Appearance	Remarks
			MCCB	ELCB	A	B	C	Number of covers	Cover mounting screw	Sealing plate		
BTC-03CS2W	White	2	NF30-CS	–	43.5	6.5	30.5	2	–	2	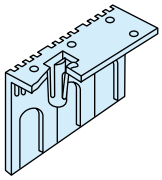	Cover for connection block in the case of simple rear connection
BTC-03CS3W	White	3		–	67	6.5	30.5	2	–	2		Cover for stud connection block on back in the case of rear connection type
BTC-05SV2	White	2	NF32-SV NF63-CV/SV/HV	– (*1)	50	5	65.5	2	–	2		
BTC-05SV3	White	3	NF32-SV NF63-CV/SV/HV	NV32-SV, NV63-HV	75	5	65.5	2	–	2		
	White	2, 3	–	NV63-CV/SV								
BTC-1SV2	White	2	NF125-CV/SV	–	60	6.5	65.5	2	–	2		
BTC-1SV3	White	3	NF125-CV/SV	NV125-CV/SV/HV	90	6.5	65.5	2	–	2		
	White	2, 3	NF125-HV/UV/SXV	–								
BTC-2SV3	White	2, 3	NF125-LXV/HXV NF250-SXV/LXV/HXV NF125-SGV/LGV/HGV/RGV NF160-SGV/LGV/HGV NF250-SGV/LGV/HGV/RGV NF250-CV/SV/HV/UV, NF250-SEV/HEV NF125-SEV/HEV	NV250-CV/SV/HV NV250-SEV/HEV NV125-SEV/HEV	105	6.5	65.5	2	–	2		
BTC-4SW3	White	2, 3	NF400-CW/SW/SEW NF630-CW/SW/SEW	NV400-CW/SW/SEW NV630-CW/SW/SEW	140	42 (*2)	99.5	2	–	2	Quick type The cover can be sealed with the sealing plate. 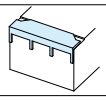	
	White	3	NF400-SEP with MDU (*5)	(*5)								
			NF400-UEW (*4)	–	140	42 (*2)	132.5/ 196.5	2	–			
BTC-4SW4 (*3)	Transparent	4	NF400-SW/SEW/HEW NF630-SW/SEW/HEW NF400-SEP with MDU/HEP with MDU (*5)	NV400-SEW/HEW NV630-SEW	185	42 (*2)	97.5	2	6	–	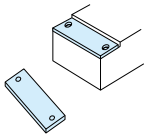	
BTC-8SW3 (*3)	Transparent	2, 3	NF800-CEW/SDW/SEW/HEW/REW	NV800-SEW/HEW	210	32 (*2)	97.5	2	8	–		
	Transparent	3	NF600-SEP with MDU/HEP with MDU (*5) NF800-SEP with MDU/HEP with MDU (*5)	–								
			NF800-UEW (*4)	–	210	32 (*2)	146/ 194.5	2	4	–		
BTC-8SW4 (*3)	Transparent	4	NF800-SEW/HEW NF600-SEP with MDU/HEP with MDU (*5) NF800-SEP with MDU/HEP with MDU (*5)	(*5)	280	32 (*2)	97.5	2	10	–		
			NF400-UEW, NF800-UEW (*4)	–	280	32 (*2)	146/ 194.5	2	6	–	Screw type	

Notes *1 For 2-pole ELCB, use BTC for 3-pole circuit breaker.
*2 Dimension B in Fig. 2
*3 The covers can be used for plug-in type circuit breakers. Other models are designed only for rear connection type.
*4 The dimension C is the size on the power supply side and load side.
*5 In the case of installation on the body, it can be fitted only on the power supply side.

Remarks 1.PTC-4SW3 can be used as the back terminal covers for NF400-HEW/REW, NF630-HEW/REW, NV400-HEW/REW and NV630-HEW.
2.For terminal covers for 4-pole circuit breakers not listed above, consult us.

Table 6-26 Plug-in terminal covers (PTC)

Type name	Color	Number of poles of circuit breaker	Applicable model		Dimensions (mm)				Contents			Appearance	Remarks
			MCCB	ELCB	A	B	C	D	Number of covers	Cover mounting screw	Sealing plate		
PTC-05SV2	White	2	NF32-SV NF63-CV/SV/HV	–	50	6.5	65.5	72	2	2	–		Cover for stud connection block in the case of plug-in type
PTC-05SV3	White	3	NF32-SV NF63-CV/SV/HV	NV32-SV, NV63-HV	75	6.5	65.5	72	2	2	–		
	White	2, 3	–	NV63-CV/SV									
PTC-1SV2	White	2	NF125-CV/SV	–	60	6.5	65.5	–	2	4	–		
PTC-1SV3	White	3	NF125-CV/SV	NV125-CV/SV/HV	90	6.5	65.5	–	2	4	–		
	White	2, 3	NF125-HV/UV/SXV	–									
PTC-2SV3	White	2, 3	NF125-LXV/HXV NF250-SXV/LXV/HXV NF125-SGV/LGV/HGV/RGV NF160-SGV/LGV/HGV NF250-SGV/LGV/HGV/RGV NF250-CV/SV/HV/UV, NF250-SEV/HEV NF125-SEV/HEV	NV250-CV/SV/HV NV250-SEV/HEV NV125-SEV/HEV	105	6.5	65.5	78.5	2	4	–	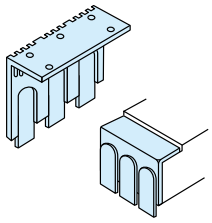 Screw type	
PTC-4SW3 (*2)	Transparent	2, 3	NF400-CW/SW/SEW NF630-CW/SW/SEW	NV400-CW/SW/SEW NV630-CW/SW/SEW	140	42	97.5	–	2	4	–	Same as screw type of BTC	
			NF400-HEW/REW (*1) NF630-HEW/REW (*1)	NV400-HEW/REW (*1) NV630-HEW (*1)									

Notes *1 The covers can be used as back terminal covers.
*2 See Fig. 2 of BTC.

Table 6-27 List of terminal covers applicable to F and V Type Operating Handles

Type name			Applicable operating handles	Number of poles of circuit breaker	Applicable model	
Large terminal covers (TC-L)	Small terminal covers (TC-S)	Transparent terminal covers (TTC)			MCCB	ELCB
TCL-05SV2F (*2)(*3) TCL-05SV2LF (*2)(*4)	TCS-05SV2F (*2)	TTC-05SV2F (*2)	F-05SV2, V-05SV2	2	NF32-SV, NF63-CV/SV/HV	– (*1)
TCL-05SV3 (*3) TCL-05SV3L (*4)	TCS-05SV3	TTC-05SV3	F-05SV, V-05SV	3	NF32-SV, NF63-CV/SV/HV	NV32-SV, NV63-HV
				2, 3	–	NV63-CV/SV
TCL-05SV4	–	–		4	NF32-SV, NF63-CV/SV/HV	–
TCL-1SV2F (*2)	TCS-1SV2F (*2)	TTC-1SV2F (*2)	F-1SV2, V-1SV2	2	NF125-CV/SV	–
TCL-1SV3	TCS-1SV3	TTC-1SV3	F-1SV, V-1SV	3	NF125-CV/SV	NV125-CV/SV/HV
				2, 3	NF125-HV/UV/SXV	–
TCL-1SV4	–	–		4	NF125-CV/SV/HV/UV/SXV	NV125-CV/SV/HV
TCL-2SV3 (*5) TCL-2SV3L (*6)	TCS-2SV3	TTC-2SV3	F-2SV, V-2SV	2, 3	NF125-LXV/HXV/SGV/LGV/HGV/SEV/HEV NF160-SGV/LGV/HGV/SEV/HEV NF250-SXV/LXV/HXV/SGV/LGV/HGV/SEV/HEV	NV250-CV/SV/HV, NV250-SEV/HEV NV125-SEV/HEV
TCL-2SV4	–	–		4	NF125-LXV/HXV/SGV/LGV/HGV/SEV/HEV NF160-SGV/LGV/HGV/SEV/HEV NF250-SXV/LXV/HXV/SGV/LGV/HGV/SEV/HEV	NV250-CV/SV/HV, NV250-SEV/HEV NV125-SEV/HEV
TCL-4SW3 TCL-4SP3W	–	TTC-4SW3	F-4S V-4S	2, 3	NF400-CW/SW/SEW/HEW/REW NF630-CW/SW/SEW/HEW/REW	NV400-CW/SW/SEW/HEW/REW NV630-CW/SW/SEW/HEW
TCL-4SW4	–	TTC-4SW4		4	NF400-SW/SEW/HEW NF630-SW/SEW/HEW	NV400-SEW/HEW NV630-SEW
TCL-8SW3	–	TTC-8SW3	F-8S V-8S	2, 3	NF800-CEW/SDW/SEW/HEW/REW	NV800-SEW/HEW
TCL-8SW4	–	TTC-8SW4		4	NF800-SEW/HEW	–

Notes *1 For 2-pole NV, use a terminal cover for 3-pole circuit breaker.
*2 Only for F and V Type Operating Handles (screw type)
*3 Applicable to circuit breakers with rating of 75A or less (max. wire size 25 mm²)
*4 Applicable to circuit breakers with rating of 125A or less (max. wire size 60 mm²)
*5 Applicable to circuit breakers with rating of 200A or less (max. wire size 100 mm²)
*6 Applicable to circuit breakers with rating of 250A or less (max. wire size 150 mm²)

Remark: 1. The terminal covers for UL 489 Listed Circuit Breakers can be normally combined with F Type Operating Handles.

4. Insulating Barriers

The insulating barrier enhances the insulation between the phases of circuit breaker terminals. It also prevents accidents due to conductive foreign matter and dust, and secondary accidents when isolating a fault current.

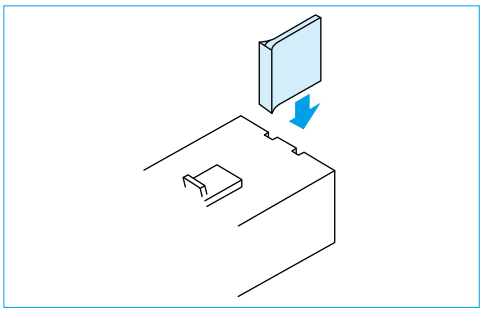

●The insulating barrier is available for the models listed in the table below.

Table 6-28

("●" denotes optional)

Applicable model		Connecting method			
MCCB	ELCB	Front	Rear	Flush plate	Plug-in
NF32-SV, NF63-CV NF125-CV, NF100-CVFU	NV32-SV, NV63-CV NV125-CV, NV100-CVFU	●	–	–	–
NF63-SV/HV NF125-SV/HV/SXV	NV63-SV/HV NV125-SV/HV	Standard attachment	–	–	–
NF125-SEV/HEV, NF125-ZEV NF250-CV/SV/HV/SEV/HEV NF125-SGV/LGV/HGV/RGV/LXV/HXV NF160-SGV/LGV/HGV/SXV/LXV/HXV NF250-SGV/LGV/HGV/RGV/SXV/LXV/HXV NF250-SEV/HEV/ZEV with MDU	NV125-SEV/HEV NV250-CV/SV/HV/SEV/HEV NV250-SEV/HEV with MDU	Standard attachment	–	–	Standard attachment
NF125-SVU NF125-HVU NF250-SVU NF250-HVU NF225-CWU	NV125-SVU NV125-HVU NV250-SVU NV250-HVU NV100-SWU	Standard attachment	–	–	–
NF400-CW/SW/SEW/HEW/REW/UEW NF630-CW/SW/SEW/HEW/REW	NV400-CW/SW/SEW/HEW/REW NV630-CW/SW/SEW/HEW	Standard attachment	●	●	Standard attachment
NF400-UEW(4P) NF800-CEW/SEW/HEW/REW/SDW	NV800-SEW/HEW	Standard attachment	●	●	●
NF800-UEW	–	Standard attachment	●	●	–
NF400-SWU/HWU NF630-SWU/HWU	–	Standard attachment	–	–	–
NF1000-SEW, NF1250-SEW/SDW	–	Standard attachment	–	–	Standard attachment
NF1600-SEW/SDW	–	Standard attachment	–	–	–

Always mount the insulating barrier when it comes with the circuit breaker.

●Insulating Barrier-Front (BA-F)

Table 6-29 Summary of dimensions

Type name	Applicable model		Dimensions (mm)		Quantity per breaker			Reference diagram
	MCCB	ELCB	A	B	2P	3P	4P	
BAF-05SV	NF32-SV NF63-CV NF125-CV	NV32-SV NV63-CV NV125-CV	50	59.5	1 (*2)	2	3	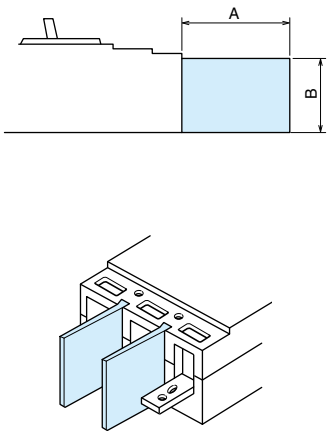
	NF63-SV/HV NF125-SV/HV/UV/SXV	NV63-SV/HV NV125-SV/HV						
BAF-2SV	NF125-LXV/HXV/SEV/HEV NF125-SGV/LGV/HGV/RGV NF160-SGV/LGV/HGV NF250-CV/SV/HV/UV/SEV/HEV NF250-SXV/LXV/HXV/SGV/LGV/HGV/RGV NF250-SEV/HEV/ZEV with MDU	NV125-SEV/HEV NV250-CV/SV/HV/SEV/HEV NV250-SEV/HEV with MDU	100	59.5	2	4	6	
BAF-05SVU	NF100-CVFU	NV100-CVFU	50	59.5	2	4	–	
	NF125-SVU NF125-HVU	NV125-SVU NV125-HVU						
BAF-2SVU	NF250-SVU NF250-HVU	NV250-SVU NV250-HVU	100	59.5	–	4	–	
BAF-2SWU	NF225-CWU	–	100	59.5	–	4	–	
BAF-4SW	NF400-CW/SW/SEW/HEW/REW NF630-CW/SW/SEW/HEW/REW	NV400-CW/SW/SEW/HEW/REW NV630-CW/SW/SEW/HEW	110	98.5	2	4	6	
BAF-4UW (*1)	NF400-UEW(3P)	–	110	132/ 98.5	–	4	–	
BAF-8SW	NF800-CEW/SEW/SDW/HEW/REW	NV800-SEW/HEW	110	98.5	1	2	3	
BAF-10SW	NF400-UEW(4P) NF800-UEW, NF1000-SEW NF1250-SEW/SDW	–	110	132	1	2	3	
BAF-4SWU	NF400-SWU/HWU	–	110	98.5	–	4	–	
	NF630-SWU/HWU(less than 600A)	–	110	98.5	–	2	–	
BAF-6SWU	NF630-SWU/HWU(630A)	–	150	98.5	–	4	–	
BAF-16SW	NF1600-SEW/SDW	–	185	132	1	2	3	

Notes *1 The barriers BAF-4UW for the power supply and load sides vary in the dimension B.
*2 Not supplied with ELCB.

●Insulating Barrier-Rear (BA-B)

Table 6-30 Summary of dimensions

Type name	Applicable model		Dimensions (mm)		Quantity per breaker			Reference diagram
	MCCB	ELCB	A	B	2P	3P	4P	
BAB-4SW	NF400-CW/SW/SEW/HEW/REW NF400-UEW(3P) NF630-CW/SW/SEW/HEW/REW	NV400-CW/SW/SEW/HEW/REW NV630-CW/SW/SEW/HEW	140	74.5	–	4	6	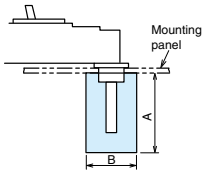
BAB-8SW	NF800-CEW/SEW/SDW/HEW/REW NF400-UEW(4P) NF800-UEW	NV800-SEW/HEW	140	74.5	–	4	6	

Drilling size for use of BA-B (in the case of 3-pole circuit breaker)

NF400-CW, NF400-SW, NF400-SEW, NF400-HEW, NF400-REW, NF400-UEW NV400-CW, NV400-SW, NV400-SEW, NV400-HEW, NV400-REW NF630-CW, NF630-SW, NF630-SEW, NF630-HEW, NF630-REW NV630-CW, NV630-SW, NV630-SEW, NV630-HEW	**NF800-CEW, NF800-SEW, NF800-HEW, NF800-REW, NF800-UEW NV800-SEW, NV800-HEW**
Power supply side Note The dimensions in brackets are those for NF400-UEW. 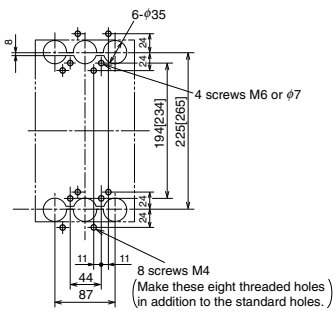 	Note The dimensions in brackets are those for NF800-UEW. 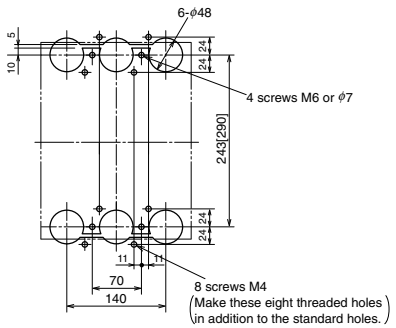

The drilling size drawings show the dimensions viewed from the rear side.

Insulating Barrier-Plug-in (BA-P)

Table 6-31 Summary of dimensions

Type name	Applicable model		Dimensions (mm)		Quantity per breaker			Reference diagram
	MCCB	ELCB	A	B	2P	3P	4P	
BAP-2SV	NF125-LXV/HXV/SEV/HEV NF125-SGV/LGV/HGV/RGV NF160-SGV/LGV/HGV NF250-CV/SV/HV/SXV/LXV/HXV NF250-SGV/LGV/HGV/RGV NF250-SEV/HEV	NV125-SEV/HEV NV250-CV/SV/HV/SEV/HEV	172	74.5	4	4	6	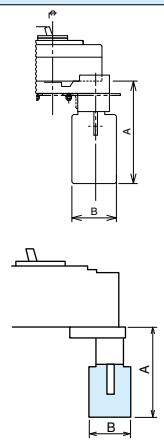
BAP-4SW	NF400-CW/SW NF400-SEW/HEW/REW/UEW NF630-CW/SW NF630-SEW/HEW/REW	NV400-CW/SW NV400-SEW/HEW/REW NV630-CW/SW NV630-SEW/HEW	178	74.5	–			
BAP-8SW	NF800-CEW/SEW NF800-HEW/REW	NV800-SEW/HEW	172	74.5				
	NF1000-SEW NF1250-SEW	–	215	74.5				

Earth fault preventing barriers (BA-G)

Table 6-32 Summary of dimensions

Type name	Applicable model		Dimensions (mm)		Quantity per breaker	Reference diagram
	MCCB	ELCB	A	B	3P	
BAG-05SV3	NF32-SV NF63-CV/SV/HV	NV32-SV NV63-CV/SV/HV	30	75	1	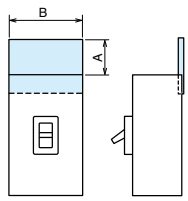 Earth fault preventing barrier (3 poles)
BAG-1SV3	NF125-CV/SV/HV/SXV	NV125-CV/SV/HV	40	90		
BAG-2SV3	NF125-LXV/HXV/SEV/HEV NF160-SGV/LGV/HGV NF250-SXV/LXV/HXV/SGV/LGV/HGV NF250-CV/SV/HV/SEV/HEV NF250-SEV/HEV/ZEV with MDU	NV125-SEV/HEV NV250-CV/SV/HV/SEV/HEV NV250-SEV/HEV with MDU	63	105		
BAG-4SW3	NF400-CW/SW/SEW/HEW/REW NF630-CW/SW/SEW/HEW/REW	NV400-CW/SW/SEW/HEW/REW NV630-CW/SW/SEW/HEW	63	164		
BAG-4UW3	NF400-UEW	–	63	164		
BAG-8SW3	NF800-CEW/SEW/SDW/HEW/REW	NV800-SEW/HEW	110	210		
BAG-8UW3	NF800-UEW	–	110	210		
BAG-10SW3	NF1000-SEW NF1250-SEW/SDW	–	98	210		
BAG-16SW3	NF1600-SEW/SDW	–	150	300		

Also the earth fault preventing barriers for 2- and 4-pole circuit breakers are available.

5. Handle Lock Devices, Lock Covers, Auxiliary Handles, Card Holders

(1) Handle Lock Devices (HL and HL-S)

These devices are used to lock the circuit breakers in the ON or OFF position. If overcurrent flows while the circuit breaker is locked, it will trip. Model HL (red resin moldings) to be fitted to handles and Model HL-S to be secured on circuit breaker covers are available. (Use a commercially available padlock having the nominal size shown in the right table. If a padlock in another size is used, the device may not lock correctly.)

Padlock size (mm)

Application	A (Nominal size)	B
a	25	4 or less
b	35	5 or less
c	40	6 or less

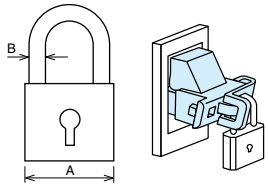

Padlock

Fig. 1

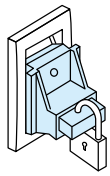
Fig. 2

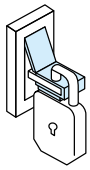
Fig. 3

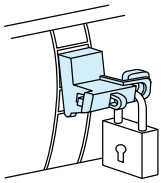
Fig. 4

Table 6-33 HL

Type name	Applicable model		Reference diagram	Padlock
	MCCB	ELCB		
HL-05FH	NF30-CS	–	Fig. 4	a
HLN-05SV	NF32-SV, NF63-CV/SV/HV NF125-CV/SV/HV/UV, NF125-SXV/LXV/HXV/SEV/HEV NF125-SGV/LGV/HGV/RGV NF160-SGV/LGV/HGV NF250-CV/SV/HV/UV, NF250-SXV/LXV/HXV/SEV/HEV NF250-SGV/LGV/HGV/RGV	NV32-SV, NV63-CV/SV/HV NV125-CV/SV/HV, NV125-SEV/HEV NV250-CV/SV/HV, NV250-SEV/HEV	Fig. 1	
HLF-05SV	NF32-SV, NF63-CV/SV/HV NF125-CV/SV/HV/UV, NF125-SXV/LXV/HXV/SEV/HEV NF125-SGV/LGV/HGV/RGV NF160-SGV/LGV/HGV NF250-CV/SV/HV/UV, NF250-SXV/LXV/HXV/SEV/HEV NF250-SGV/LGV/HGV/RGV	NV32-SV, NV63-CV/SV/HV NV125-CV/SV/HV, NV125-SEV/HEV NV250-CV/SV/HV, NV250-SEV/HEV		
HLF-05SVU	NF125-SVU/HVU NF250-SVU/HVU	NV125-SVU/HVU NV250-SVU/HVU		
		–		
HLF-2SWU	NF225-CWU	–		
HL-4CW (*1)	NF400-CW	NV400-CW	Fig. 2	c
HL-4SW (*1)	NF400-SW/SEW/HEW/REW/UEW NF630-CW/SW/SEW/HEW/REW NF800-CEW/SDW/SEW/HEW/REW/UEW	NV400-SW/SEW/HEW/REW NV630-CW/SW/SEW/HEW NV800-SEW/HEW		
HL-4SWU	NF400-SWU/HWU, NF630-SWU/HWU	–		
HL (*2)	NF1000-SEW, NF1250-SEW/SDW, NF1600-SEW/SDW	–	Fig. 3	

Notes *1 When a padlock is not used, the device can be used as a lock cover (LC).
*2 Place an order for a circuit breaker body combined with the device.

Remarks 1. One lot of HL-4CW and HL-4SW contains one piece, and one lot of others contains 10 pieces.
2. HLF types are used for OFF lock, and HLN types for ON lock.

Table 6-34 HL-S

Type name	Applicable model				Dimensions (mm)						Reference diagram	Padlock
	MCCB	Number of poles	ELCB	Number of poles	A	B	C	D	E	F		
HLS-05SV2 (*1)	NF32-SV, NF63-CV, NF63-SV NF63-HV	2P	–	–	32	75	50	–	63	32	Fig. 5	b
	NF125-CV, NF125-SV	2P	–	–			57					
HLS-05SV (*1)	NF32-SV, NF63-CV, NF63-SV NF63-HV	3P	NV32-SV, NV63-HV	3P			75					
	NF63-SV,NF63-HV	4P	–	–				23				
	NF125-CV, NF125-SV, NF125-SXV	3P	NV125-CV, NV125-SV, NV125-HV	3P			86	–				
	NF125-HV	2P, 3P	–	–								
	NF125-SV, NF125-HV, NF125-SXV	4P	NV125-SV, NV125-HV	4P				28				
	NF125-UV	2P, 3P	–	–	62.5			–		1.5		
		4P	–	–				28				
HLS-2SV (*1)	NF125-LXV/HXV/SGV/LGV/HGV/RGV NF160-SGV/LGV/HGV NF250-CV/SV/HV/SXV/LXV/HXV NF250-SGV/LGV/HGV/RGV	2P	NV125-SEV, NV125-HEV NV250-CV, NV250-SV, NV250-HV NV250-SEV, NV250-HEV	3P	32	84	100	–		32		
	NF125-SEV, NF125-HEV NF125-LXV/HXV/SGV/LGV/HGV/RGV NF160-SGV/LGV/HGV NF250-CV/SV/HV/SXV/LXV/HXV NF250-SEV, NF250-HEV NF250-SGV/LGV/HGV/RGV	3P										
	NF125-SEV, NF125-HEV NF125-LXV/HXV/SGV/LGV/HGV/RGV NF160-SGV/LGV/HGV NF250-SV/HV/SXV/LXV/HXV, NF250-SEV, NF250-HEV NF250-SGV/LGV/HGV/RGV	4P	NV125-SEV, NV125-HEV NV250-SV, NV250-SEV, NV250-HEV	4P				33				
	NF250-UV	2P, 3P	–	–	69.5			–		-5.5		
		4P	–	–				33				
HLS-03SVU (*1)	NF50-SVFU	2P, 3P	NV50-SVFU	2P, 3P	–	–	–	–		32	Fig. 9	
HLS-05SVU2 (*1)	NF100-CVFU	2P	–	–	32	75	50	–			Fig. 5	
HLS-05SVU (*1)	NF100-CVFU	3P	NV100-CVFU	3P			75					
	NF125-SVU/HVU	2P, 3P	NV125-SVU/HVU	3P			86					
HLS-05SVU (*2)	NF125-SVU/HVU	2P, 3P	NV125-SVU/HVU	3P	32	75	86	–		32	Fig. 5	
HLS-2SVU (*1)	NF250-SVU/HVU	3P	NV250-SVU/HVU	3P		84	100					
HLS-2SWU (*1)	NF225-CWU	3P	–	3P		84	100	–		32	Fig. 6	
HLS-4SW (*3)	NF400-CW/SW/SEW/HEW/REW NF630-CW/SW/SEW/HEW/REW	2P, 3P, 4P	NV400-CW/SW/SEW/ HEW/REW NV630-CW/SW/SEW/ HEW	3P, 4P	–	–	–	–	–	–	Fig. 7	
HLS-4UW (*3)	NF400-UEW	3P	–	–	–	–	–	–	–	–		
HLS-8SW (*3)	NF800-CEW/SDW/SEW/HEW/REW	2P, 3P, 4P	NV800-SEW/HEW	3P, 4P	–	–	–	–	–	–	Fig. 8	
HLS-8UW (*3)	NF400-UEW	4P	–	–	–	–	–	–	–	–		
	NF800-UEW	3P, 4P										

Notes *1 For locking in OFF position
*2 A, B, C and D in Figs. 5 and 6 are drilling sizes in front plate.
*3 Terminal covers cannot be fitted.

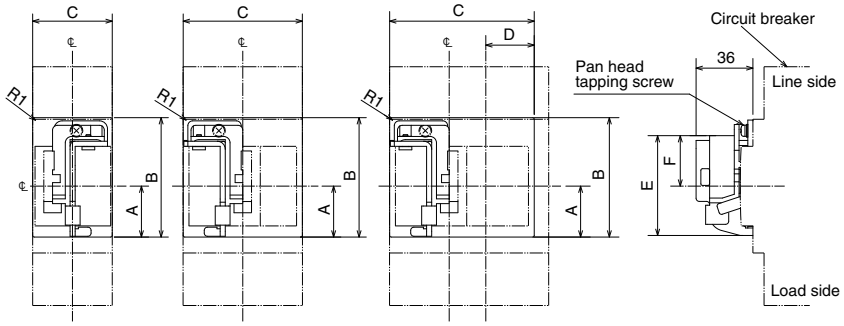

Fig. 5

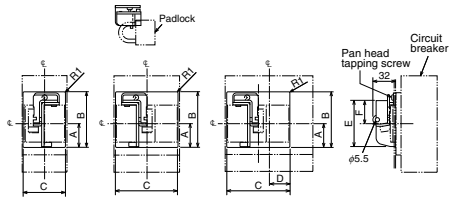

Fig. 6

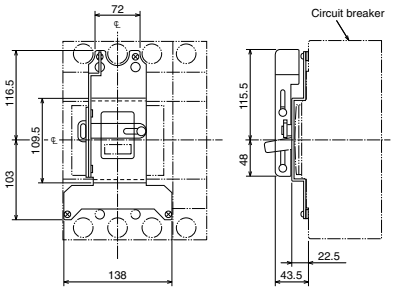

Fig. 7

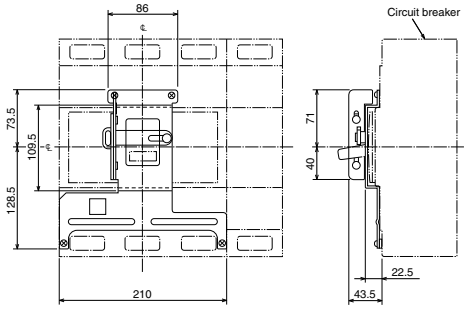

Fig. 8

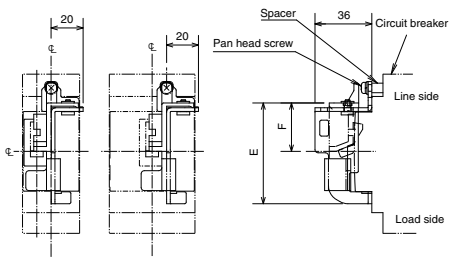

Fig. 9

(2) Lock Covers (LC)

Lock Cover is a plug-in lock for indicating easily without using padlocks that it is prohibited to operate the circuit breaker.
A "Caution" tag can be hung on it.
The covers are red resin moldings.

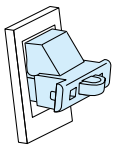

LC-05SW to LC-2SW

LCBH1

LCBH2, 3

Table 6-35 LC

Type name	Applicable model	
	MCCB	ELCB
LC03CS	NF30-CS	–
LC-05SV	NF32-SV NF63-CV/SV/HV NF125-CV/SV/HV/UV NF125-SXV/LXV/HXV/SEV/HEV NF125-SGV/LGV/HGV/RGV NF160-SGV/LGV/HGV NF250-CV/SV/HV/UV NF250-SXV/LXV/HXV/SEV/HEV NF250-SGV/LGV/HGV/RGV	NV32-SV NV63-CV/SV/HV NV125-CV/SV/HV NV125-SEV/HEV NV250-CV/SV/HV NV250-SEV/HEV
LCBH1R (red) LCBH1Y (yellow)	BH-P(1P)	–
LCBH2R (red) LCBH2Y (yellow)	BH-P(2P)	–
LCBH3R (red) LCBH3Y (yellow)	BH-P(3P)	–

Remark: 1. One lot of LCBH, LCBL and LCNVL contains 50 pieces, and one lot of other models contains 10 pieces.

(3) Auxiliary Handles (HT)

These handles facilitate opening and closing circuit breakers.

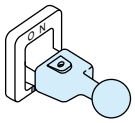

Auxiliary Handles

Table 6-36 HT

Type name	Applicable model	Dimensions					Outline dimension drawing
		A	B	C	D	E	
HT-4CW (*1)	NF400-CW, NV400-CW	59	77.5	32	38	M4	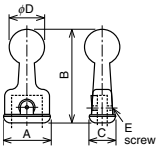
HT-4SW (*1) (*2)	NF400-SW/SEW/HEW/REW/UEW NF630-CW/SW/SEW/HEW/REW NF800-CEW/SDW/SEW/HEW NF800-REW/UEW NV400-SW/SEW/HEW/REW NV630-CW/SW/SEW/HEW NV800-SEW/HEW		81				
HT-10SW	NF1000-SEW NF1250-SEW/SDW NF1600-SEW/SDW	62	118	34	45	M4	

Notes *1 HT can be supplied separately. The user can fit it to the circuit breaker. (One lot contains 1 piece.)
*2 1-pole circuit breakers with 800A frame and 4-pole NF400-UEW come with auxiliary handles as standard accessories.

(4) Card Holders (CH)

Cards showing the circuit breaker name and circuit number can be inserted to the card holder.
Fit the card holder to the circuit breaker body or the flush plate in the flush frame. (Although a card holder is supplied with each circuit breaker body, the card holder is available as an optional part.)

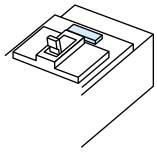

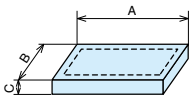

Table 6-37 Card holder size (mm)

Applicable model	Type name	A	B	C	Card size
NF250-SV or below NV250-SV or below	CH-P No.5	44	12	5	39×9
NF400-SW or above NV400-SW or above	CH-P No.3	38	22	5	33×20

6. Mechanical Interlocks (MI)

This mechanical interlock device is used to enable one of two circuit breakers to turn on. Install the device on the panel.
Mechanical interlocks to be installed directly to circuit breaker bodies can be manufactured.
Consult us for details.

●Front, rear and plug-in types

Front, rear and plug-in types (Panel mounting)
These interlocks can be locked with padlocks.

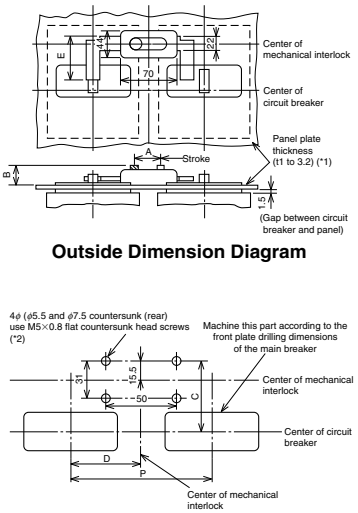

Fig. 1

Front, rear and plug-in types (Panel mounting)

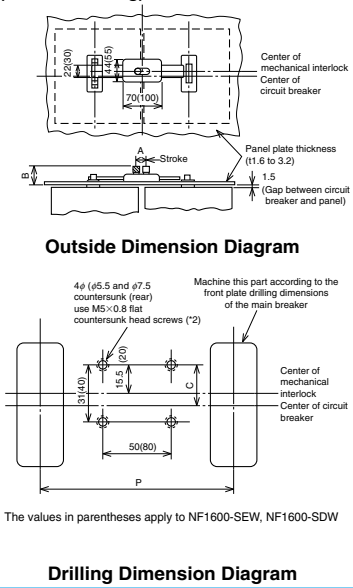

Fig. 2

Breaker mountiong (front)

Terminal covers cannot be fitted.

Type name	J
MI-05SVFB2	47.5
MI-1SVFB2	45

Type name	F	G	H
MI-05SVFB3	25	111	61
MI-05SWHFB3	25	111	75
MI-1SVFB3	30	111	61
MI-2SVFB3	35	126	61

Type name	F	G	P
MI-4SWFB3	44	194	190
MI-8SWFB3	70	243	260

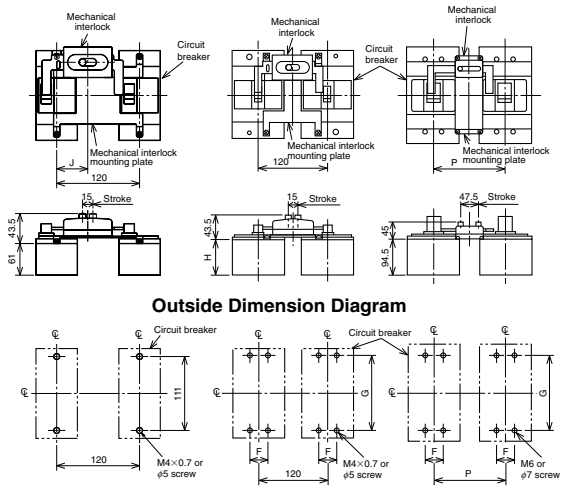

Fig. 3

Notes *1 For 400A frame or above, use a panel 1.6 to 3.2 thick.
*2 When the panel is 2.3 or more thick, countersink the panel (rear side) in ϕ9.5 for the four ϕ5.5 holes.

Table 6-38 Table of variable dimensions

Applicable model		Pitch (P) (*1)							Dimensions (mm)						Reference diagram	Breaker mount (*3)	Reference diagram (3P)
MCCB	ELCB (*6)	Standard			Semi-standard		Standard		t	A	B	C	D	E		Type name	
		Type name	2P	3P	3P		Type name	4P								2P•3P	
NF32-SV, NF63-CV/SV/HV	–	MI-05SV3	120	–	–	–	–	–	(*2) –	15	33	63	47.5	58	(Fig. 1)	MI-05SVFB2	(Fig. 3)
NF32-SV, NF63-CV/SV/HV	NV32-SV, NV63-CV/SV/HV		–	120	–	130	MI-05SV4	120 (*4)		15	33	63	–	58		MI-05SVFB3	
NF125-CV/SV	–	MI-05SV3	120	–	–	–	–	–		15	33	63	45	58		MI-1SVFB2	
NF125-CV/SV/HV/SXV	NV125-CV/SV/HV		–	120	130	150	MI-1SV4	130 (*4)		15	33	63	–	58		MI-1SVFB3	
NF125-UV	–									15	33	32.5		58		–	–
NF125-LXV/HXV/SEV/HEV NF125-SGV/LGV/HGV/RGV NF160-SGV/LGV/HGV NF250-CV/SV/HV, NF250-SXV/LXV/HXV/SEV/HEV NF250-SGV/LGV/HGV/RGV	NV125-SEV/HEV NV250-CV/SV/HV NV250-SEV/HEV	MI-05SV3	120 (*4)		150	180	MI-2SV4	150 (*4)		15	33	63	–	58		MI-2SVFB3	(Fig. 3)
NF250-UV	–											25.5				–	–
NF225-CWU	–	MI-05SWU3	–	120 (*4)	–	–	–	–		15	33	63	–	58		–	–
NF400-CW/SW/SEW/HEW/REW NF630-CW/SW/SEW/HEW/REW	NV400-CW/SW/SEW/HEW/REW NV630-CW/SW/SEW/HEW	MI-4SW3	190		–	210	MI-4SW4	250	(*2) –	47.5	33	83.5	–	74		MI-4SWFB3	(Fig. 3)
NF400-UEW (3P)	–		–	190			–	–				83.5				–	
NF800-CEW/SDW/SEW/HEW/REW	NV800-SEW/HEW	MI-8SW3	220		–	240	MI-8SW4	290		47.5	33	83.5	–	74		MI-8SWFB3	
NF400-UEW (4P) NF800-UEW	–		–	220								60				–	
NF1000-SEW, NF1250-SEW/SDW	–	MI-10SW3	220		–	–	MI-10SW4	290	2.3 (*5)	47.5	47	37.5	–	–	(Fig. 2)	–	–
NF1600-SEW/SDW	–	MI-16SW3	315		–	–	MI-16SW4	426		65	54.5	39	–	–		–	

Notes *1 Specify the circuit breaker mounting pitch (P).
*2 No need to specify the panel thickness (t). (Usable panel thickness range: t = 1~3.2mm. Above 400AF, use panel thickness t = 1.6~3.2mm)
*3 Terminal covers cannot be fitted. (However, TCL-4SW3 can be fitted.)
*4 When UVT is provided, separately install the module.
*5 If the thickness is not 2.3, specify the panel thickness (t).
*6 For NV with TBL, use a circuit breaker with MG.

Remarks 1. When a mechanical interlock is installed on the panel, screw type terminal covers cannot be installed.
2. These devices do not provide an isolation function. However, 400, 600, 630 and 800A frame circuit breakers can be made conforming to it. (See Note 3.)
3. On a 2-pole circuit breaker obtained by removing the neutral pole conductor from a 3-pole circuit breaker, the mechanical interlock can be installed in the same manner as on a 3-pole circuit breaker.

7. Boxes for Circuit Breakers and Boxed Circuit Breakers

(1) Kinds and specifications

Table 6-39

			Closed type (S)		Dust-proof type (I)	Water-proof type (W)
Appearance			(*1)	(*1)		
MCCB (*2)	NF30-CS	2, 3P	NFS-03CS	–	–	–
	NF32-SV, NF63-CV/SV/HV	2P	NFS-05SV2 (*5)	–	NFI-05SV	–
		3P	NFS-05SV			NFW-05SV
	NF125-CV/SV	2P	NFS-1SV2 (*5)	–	NFI-1SV	–
		3P	NFS-1SV			NFW-1SV
	NF125-HV/SXV	2, 3P				NFW-1HV
	NF125-SGV/LGV NF160-SGV/LGV NF250-SXV/SGV/LGV NF250-CV/SV, NF125/250-SEV	2, 3P	NFS-2SV	–	NFI-2SV	NFW-2SV
	NF125/160/250-HGV/LXV/HXV NF250-HV, NF125/250-HEV		–			
	NF400-CW		–	–	NFI-4CW	NFW-4CW
	NF400-SW/SEW		–	–	NFI-4SW	NFW-4SW
	NF630-CW/SW/SEW		–	–	NFI-6SW	NFW-6SW
	NF800-CEW/SDW/SEW		–	–	NFI-8SW	NFW-8SW
ELCB (*2)	NV32-SV, NV63-CV/SV/HV	2P	NFS-05SV	–	NFI-05SV	–
		3P	NFS-05SV			NFW-05SV
	NV125-CV/SV	3P	NFS-1SV	–	NFI-1SV	NFW-1SV
	NV125-HV		NFS-1SV			NFW-1HV
	NV250-CV/SV, NV125/250-SEV		NFS-2SV	–	NFI-2SV	NFW-2SV
	NV250-HV, NV125/250-HEV		–			
	NV400-CW		–	–	NFI-4CW	NFW-4CW
	NV400-SW/SEW		–	–	NFI-4SW	NFW-4SW
	NV630-CW/SW/SEW		–	–	NFI-6SW	NFW-6SW
	NV800-SEW		–	–	NFI-8SW	NFW-8SW
Operating method			Direct operation of circuit breaker handle		Operation through operating handle mechanism	
Standard paint color			Box: Munsell 5Y7/1 Operating handle: Munsell N1.5			
Protection class (IEC 60529)			IP3X		IP4X (*3)	IP65 (*4)

Notes *1 The window frame varies depending on the model.
*2 For 1-pole circuit breakers, boxes are not manufactured.
*3 The protection class of NFI-1SV and NFI-2SV is IP3X.
*4 The protection class of NFW-4CW, NFW-4SW, NFW-6SW and NFW-8SW is IP54.
*5 The circuit breaker body is a 2-pole external type.

Remarks: 1. Only internal accessories with lead wires drawn out can be fitted. (However, LT and SLT can be fitted on the right pole side.)
2. The dust-proof type (I) models do not provide an isolation function.

●Selection of rated current

When selecting the rated current of circuit breaker, it is necessary to consider the temperature in the box. When the rated current is carried, the temperature in the box increases by 10 to 20K. Correct the rated current with the temperature correction curve.
Determine the maximum working current to be 80% or less of the rated current.

●Locking

Type I and W boxed circuit breakers can be provided with locks in the following parts. Locking can prevent unnecessary operation.
①Cover and case
②ON or OFF position of operating handle
(Padlocks must be prepared by the user. The dimensions of the padlocks are shown on page 116.)

●Interlock (only for Dust-proof type)

The cover cannot be opened while the circuit breaker is in the ON state. However, if the interlock release screw is turned, the cover is released from the locked state and can be opened even in the ON state.

●Handle operation and display

The ON, OFF or trip state of the body is displayed on each position on the decorative board.

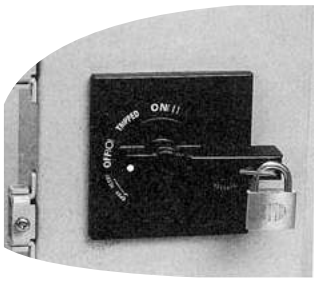

Example of Type I operating handle block

(2) External dimensions

■MCCB

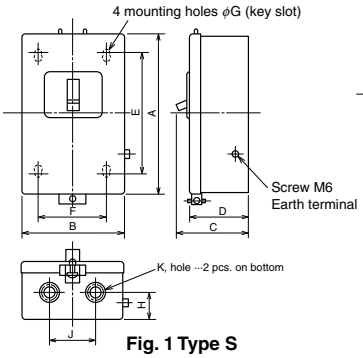

Fig. 1 Type S

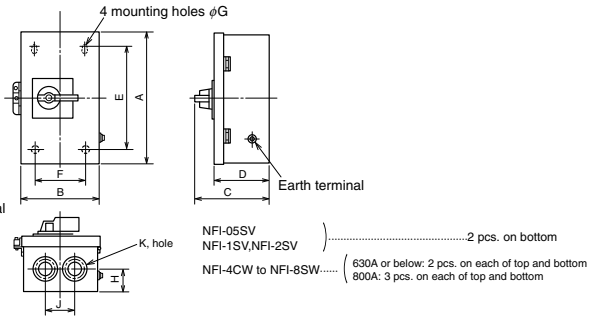

Fig. 3 Type I

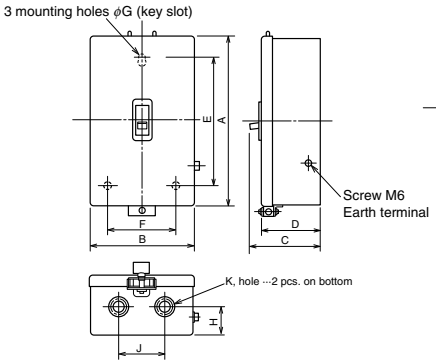

Fig. 2 Type S

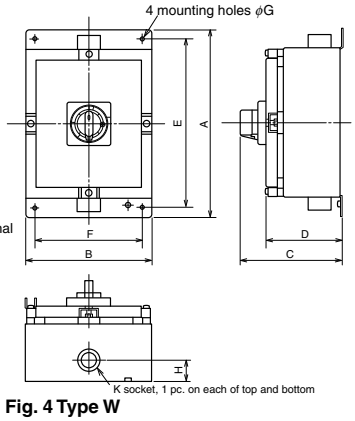

Fig. 4 Type W

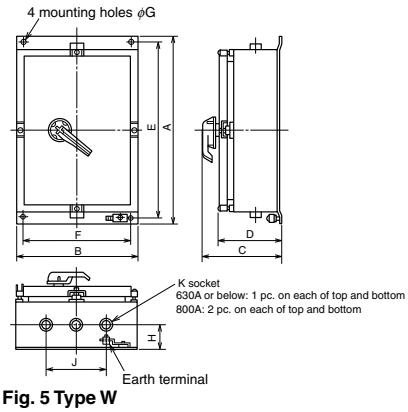

Fig. 5 Type W

Table 6-40 Table of variable dimensions (Boxes for 4-pole circuit breakers are not manufactured.)

Note) The sockets are applicable to thick steel duct (JIS C 8305) and conduit tube thread.

Box type	Type name	Applicable Model	Variable dimensions										
			Fig.	A	B	C	D	E	F	G	H	J	K
S	NFS-03CS	NF30-CS	2	188	158	69	58	150	78	6	25	100	20, 28
	NFS-05SV2	NF32-SV, NF63-CV/SV/HV	1	260	178	98	78	202	100	7	34	100	28, 35, 44
	NFS-05SV												
	NFS-1SV2	NF125-CV/SV	1	310	178	98	78	252	100	7	34	100	28, 35, 44
	NFS-1SV	NF125-CV/SV/HV/SXV											
	NFS-2SV	NF250-CV/SV, NF125/250-SEV NF125-SGV/LGV NF160-SGV/LGV NF250-SXV/SGV/LGV	1	440	247	137	116	373	170	9	52	120	50, 62, 78
I	NFI-05SV	NF32-SV, NF63-CV/SV/HV	3	350	186	155.5	117	286	120	7	42	100	28, 35, 44
	NFI-1SV	NF125-CV/SV/HV/SXV	3	352	188	155.5	118	286	120	7	42	100	28, 35, 44
	NFI-2SV	NF250-CV/SV/HV, NF125/250-SEV/HEV NF125-LXV/HXV/SGV/LGV/HGV NF160-SGV/LGV/HGV NF250-SXV/LXV/HXV/SGV/LGV/HGV	3	442	248	162	124	373	170	9	54	120	50, 62, 78
	NFI-4CW	NF400-CW	3	730	320	244	191	650	240	11	87	120	50, 62, 78
	NFI-4SW	NF400-SW/SEW	3	730	320	244	191	650	240	11	65	120	50, 62, 78
	NFI-6SW	NF630-CW/SW/SEW	3	940	433	260	207	856	350	15	90	150	92
	NFI-8SW	NF800-CEW/SDW/SEW	3	1353	543	304	251	1270	460	15	90	320	104
W	NFW-05SV	NF32-SV, NF63-CV/SV/HV	4	390	265	214	160	350	225	9.5	45	–	28
	NFW-1SV	NF125-CV/SV	4	390	265	214	160	350	225	9.5	50	–	36
	NFW-1HV	NF125-HV/SXV	4	480	265	239	186	440	225	9.5	60	–	36
	NFW-2SV	NF250-CV/SV/HV, NF125/250-SEV/HEV NF125-LXV/HXV/SGV/LGV/HGV NF160-SGV/LGV/HGV NF250-SXV/LXV/HXV/SGV/LGV/HGV	4	550	355	264	210	510	315	11	75	–	54
	NFW-4CW	NF400-CW	5	800	355	257	220	760	315	11	85	–	70
	NFW-4SW	NF400-SW/SEW	5	800	355	257	220	760	315	11	85	–	70
	NFW-6SW	NF630-CW/SW/SEW	5	800	355	257	220	760	315	11	85	–	82
	NFW-8SW	NF800-CEW/SDW/SEW	5	1435	550	339	265	1395	515	15	100	180	104

ELCB

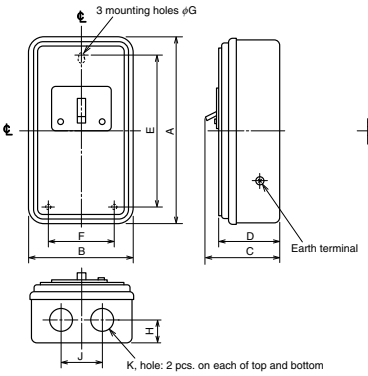

Fig. 1 Type S

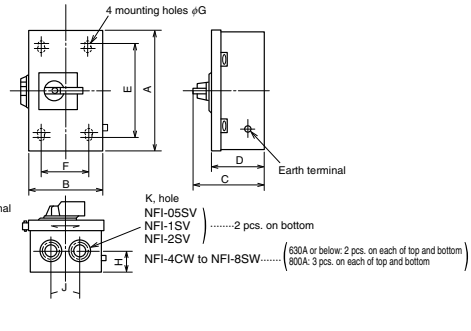

Fig. 3 Type I

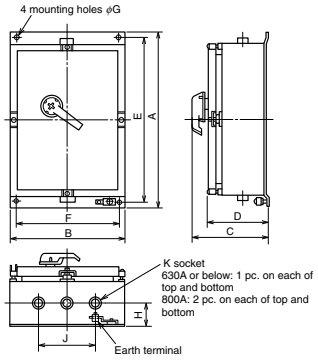

Fig. 5 Type W

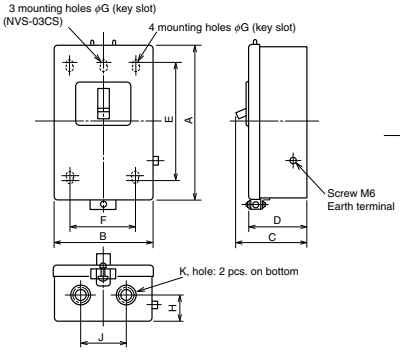

Fig. 2 Type S

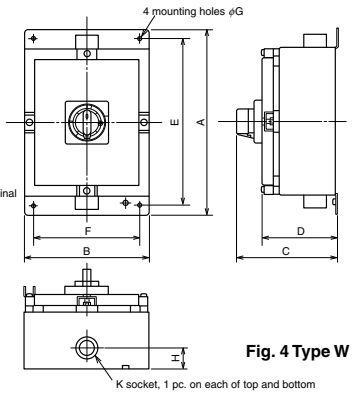

Fig. 4 Type W

Table 6-41 Table of variable dimensions (Boxes for 4-pole circuit breakers are not manufactured.)

Note) The sockets are applicable to thick steel duct (JIS C 8305) and conduit tube thread.

Box type	Type name	Applicable Model	Variable dimensions										
			Fig.	A	B	C	D	E	F	G	H	J	K
S	NFS-05SV2	NV32-SV, NV63-CV/SV/HV	2	260	178	98	78	202	100	7	34	100	28, 35, 44
	NFS-05SV												
	NFS-1SV2	NV125-CV/SV	2	310	178	98	78	252	100	7	34	100	28, 35, 44
	NFS-1SV	NV125-CV/SV/HV											
	NFS-2SV	NV250-CV/SV, NV125/250-SEV	2	440	247	137	116	373	170	9	52	120	50, 62, 78
I	NFI-05SV	NV32-SV, NV63-CV/SV/HV	3	350	186	155.5	117	286	120	7	42	100	28, 35, 44
	NFI-1SV	NV125-CV/SV/HV	3	352	188	155.5	118	286	120	7	42	100	28, 35, 44
	NFI-2SV	NV250-CV/SV/HV, NV125/250-SEV/HEV	3	442	248	162	124	373	170	9	54	120	50, 62, 78
	NFI-4CW	NV400-CW	3	730	320	244	191	650	240	11	87	120	50, 62, 78
	NFI-4SW	NV400-SW/SEW	3	730	320	244	191	650	240	11	65	120	50, 62, 78
	NFI-6SW	NV630-CW/SW/SEW	2	940	433	260	207	856	350	15	90	150	92
	NFI-8SW	NV800-SEW	3	1353	543	304	251	1270	460	15	90	320	104
W	NFW-05SV	NV32-SV, NV63-CV/SV/HV	4	390	265	214	160	350	225	9.5	45	–	28
	NFW-1SV	NV125-CV/SV	4	390	265	214	160	350	225	9.5	50	–	36
	NFW-1HV	NV125-HV	4	480	265	239	186	440	225	9.5	60	–	36
	NFW-2SV	NV250-CV/SV/HV, NV125/250-SEV/HEV	4	550	355	264	210	510	315	11	75	–	54
	NFW-4CW	NV400-CW	5	800	355	257	220	760	315	11	85	–	70
	NFW-4SW	NV400-SW/SEW	5	800	355	257	220	760	315	11	85	–	70
	NFW-6SW	NV630-CW/SW/SEW	5	800	355	257	220	760	315	11	85	–	82
	NFW-8SW	NV800-SEW	5	1435	550	339	265	1395	515	15	100	180	104

8. Electrical Operated Circuit Breakers and Electrical Operation Devices

Spring charge type (1)

Spring charge type (2)
Standard paint color: Munsell 5Y7/1

Motor-drive type (2)
Standard paint color: Munsell 5Y7/1

(1) Specifications

●Electrically operated circuit breakers

Table 6-42

Specify the electrical operation device together with the circuit breaker body.

Electrically operating method		Spring charge type (1)	Spring charge type (2)		Motor-drive type (2)	
MCCB	Class S, H and R	NF125-SV/HV/SXV/LXV/HXV NF125-SEV, NF125-HEV NF125-SGV/LGV/HGV/RGV NF160-SGV/LGV/HGV NF250-SV/HV/SXV/LXV/HXV NF250-SEV, NF250-HEV NF250-SGV/LGV/HGV/RGV NF125-RV, NF250-RV	NF400-SW, NF400-SEW NF400-HEW, NF400-REW NF630-SW, NF630-SEW NF630-HEW, NF630-REW NF800-SDW, NF800-SEW NF800-HEW, NF800-REW	NF1000-SEW NF1250-SEW NF1250-SDW NF1600-SEW NF1600-SDW	NF400-SW, NF400-SEW NF400-HEW, NF400-REW NF630-SW, NF630-SEW NF630-HEW, NF630-REW NF800-SDW, NF800-SEW NF800-HEW, NF800-REW	NF1000-SEW NF1250-SEW NF1250-SDW NF1600-SEW NF1600-SDW
	Class C	NF125-CV NF250-CV	NF400-CW NF630-CW NF800-CEW	–	NF400-CW NF630-CW NF800-CEW	–
	Class U	NF125-UV NF250-UV	NF400-UEW NF800-UEW	–	NF400-UEW NF800-UEW	–
	Motor breakers	NF125-SV, NF250-SV	–	–	–	–
ELCB	Class S, H and R	NV125-SV, NV125-HV NV125-SEV, NV125-HEV NV250-SV, NV250-HV NV250-SEV, NV250-HEV	NV400-SW, NV400-SEW NV400-HEW, NV400-REW NV630-SW, NV630-SEW NV630-HEW, NF800-SEW NV800-HEW	–	NV400-SW, NV400-SEW NV400-HEW, NV400-REW NV630-SW, NV630-SEW NV630-HEW, NF800-SEW NV800-HEW (*3)	–
	Class C	NV125-CV NV250-CV	NV400-CW NV630-CW	–	NV400-CW(*3) NV630-CW	–
	Motor breakers	NV125-SV, NV250-SV	–	–	–	–
Rated operating voltage (V) (Allowable operating voltage range: 85 to 110%)		Compatible with 100 to 240 V AC and 100 to 250 V DC 24 V DC, 48 to 60 V DC (*1)	DC100-110, AC100-110 AC200-220(DC125, AC240)		DC100-110, AC100-110, AC200-220 (DC125, AC240)	
Operating current (Ams) Values in ( ): Starting current	DC 100/110V ON	0.5 (1.5)	8	10	3.0(8.0)	5.0(13.5)
	DC 100/110V OFF		1.0 (3.0)	1.0 (4.0)		
	AC 100/110V ON	0.6 (3.0)	10	10	4.0(8.0)	5.0(10.0)
	AC 100/110V OFF		1.0 (3.0)	1.0 (3.0)		
	AC 200/220V ON	0.5 (2.5)	8	8	2.0(4.5)	3.5(7.0)
	AC 200/220V OFF		0.5 (1.5)	0.5 (1.5)		
Operating time	s ON	0.05~0.1(*2)	0.05	0.07	0.3 or less (self-holding type)	
	s OFF	0.6 or less (self-holding type)	3 or less (self-holding type)			
	s Charge	1.2 or less (self-holding type)			–	–
Required transformer capacity VA		150	700		400	700
Endurance voltage		1500V	1500V			

Notes *1 When the rated operating voltage is 24 V DC or 48 to 60 V DC, specify the voltage. If the voltage is not specified, the circuit breaker will be manufactured for 100 to 240 V AC and 100 to 250 V DC.
*2 For 24-V DC circuit breakers, the operating time at a voltage of 100% or more is shown.
*3 Models for special voltage (125 V DC or 240 V AC) are not provided with the test button.

Remarks
1. Flush plate type circuit breakers can be manufactured to order.
2. The models with voltage in parentheses are special voltage products.
3. For the spring charge type (1), use an ON-OFF operating switch for minute load.
4. For the spring charge type (1) The circuit breaker of 3 pole can be used TC-S, TC-L, TTC, BTC and PTC.
   In case of 125A frame 4 pole can be used only TC-L.
   In case of 250A frame 4 pole can be used TC-S, TC-L, TTC, BTC and PTC.
5. When the body of the spring charge type (1) breaker is an earth leakage alarm breaker, the reset button cannot be pressed. Provide such a circuit breaker with an external reset or automatic reset system (except for the electronic type).
6. When the body of the motor-drive type (2) or spring charge type (2) has internal accessories, they are normally provided with lead wire terminal blocks.
7. The types other than the spring charge type (1) do not provide an isolation function.
8. When placing an order for a CE marked product of the spring charge type (1) or spring charge type (2), specify the model name with CE.
9. The switching durability of electrically operated circuit breakers conforms to JIS.

●Electrical operation devices

The following models of Electrical Operation Devices are supplied also as separate devices. The user can install them to the circuit breaker body.
(Front connection, rear connection and plug-in types)
(When requiring a motor breaker or a CE marked product, place an order for it together with the circuit breaker body.)

Table 6-43

Electrically operating method	Spring charge type (1)				
Applicable models / Rated operating voltage	NF125-CV/SV/HV NF125-SXV	NV125-CV/SV/HV	NF125-SEV/HEV/SGV/LGV/HGV/RGV NF160-SGV/LGV/HGV NF250-CV/SV/HV/UV/SEV/HEV/SGV/LGV/HGV/RGV NF250-UV	NV250-CV/SV/HV	NV125-SEV/HEV NV250-SEV/HEV
Compactible to 100-240VAC/100-250VDC	MDSAD240-NF1SVE	MDSAD240-NV1SVE	MDSAD240-NF2SVE	MDSAD240-NV2SVE	MDSAD240-NVE2SVE
24VDC	MDSD024-NF1SVE	MDSD024-NV1SVE	MDSD024-NF2SVE	MDSD024-NV2SVE	MDSD024-NVE2SVE
48-60VDC	MDSD060-NF1SVE	MDSD060-NV1SVE	MDSD060-NF2SVE	MDSD060-NV2SVE	MDSD060-NVE2SVE

●Cautions

- All electrical operations are based on intermittent rating. Avoid operating any device continuously 10 times or more (ON and OFF operations are counted as one time).
- Operate any device at 85 to 110% of the rated operating voltage.
- The dielectric strength of electrical operation circuits is 1500 V. When performing dielectric strength test of any of these devices and other devices, if the test voltage exceeds the rated value (1500 V), disconnect the operation power supply terminal.
- When collectively operating more than one electrical operation device, isolate the devices connecting a relay to each device.
  If the control terminals are directly connected in parallel, a circuit will be formed, and the devices may not normally function.

●Automatic reset (optional)

The automatic reset type has a built-in alarm switch in the circuit breaker and is connected in such a way that the OFF operation circuit is closed when the circuit breaker trips. Therefore, when the circuit breaker trips, it is automatically reset.
However, when the circuit breaker thermally trips, it may not be automatically reset.
If an automatic reset spring charge type (1) is required, the user must wire the device in accordance with the external connection diagram shown in Fig. 1 in (3).

(2) Installation and connection (List of manufacturable)

Table 6-44

Frame (A) \ Installation and connection method	Front connection type	Rear connection type	Plug-in type (*1)
50~250	○	○	○ (*2)
400~800	○	○	○
1000, 1250	○	○	○
1600	○	○	–

Notes *1 For ELCB, only 3-pole circuit breakers with a frame size of 125 to 400 A can be manufactured.
*2 In the case of 4-pole 125 A frame circuit breakers and U class, the circuit breakers are supplied as special models. Consult us for details.
Remarks: 1. All models of the front connection type are provided with bar terminals (except the spring charge type (1)).
2. 2-pole circuit breakers of all models are obtained by removing the neutral pole conductors from 3-pole circuit breakers.

(3) Structure and operation

■Spring charge type (1)

●Electrical operation

- When the ON operation switch is closed, the relay will operate, the motor will be driven, the latch mechanism will be released, and the closing spring force will instantaneously turn on the circuit breaker.
- When the OFF operation switch is closed, the relay will operate, the motor will be driven, the circuit breaker will be turned off (reset), and, at the same time, the closing spring will be charged.

Note: The charge may not be completed because the circuit protective function operates.

●Manual operation

- After turning the MANUAL/AUTO selection switch on the cover upper surface to MANUAL, press the ON button, and the latch mechanism will be released, and the closing spring force will instantaneously turn on the circuit breaker.
- After turning the MANUAL/AUTO selection switch on the cover upper surface to MANUAL, draw out the manual handle, and move it upward and downward about 10 to 14 times. Then, the circuit breaker will be turned off (reset), and, at the same time, the closing spring will be charged. Although the circuit breaker can be turned off even if the switch is not turned to MANUAL, the selection switch should be set to MANUAL because remote operation may be accepted.
- After turning the changeover switch to MANUAL, draw out the OFF lock plate, and lock the circuit breaker in the OFF state with padlocks (to be prepared by the user). Up to three padlocks can be fitted.
  ϕ5 to ϕ8 padlocks can be fitted.

Note: After the completion of manual operation (on-site operation), return the selection switch to AUTO without fail. If it is not returned, electrical operation (remote operation) cannot be performed.

●Display of tripping state

When the circuit breaker trips in the ON state, the tripping state is displayed. When it trips in the OFF state, the OFF state is kept displayed.
Note: When it trips in the OFF state, signals from AL will not be output.

●Cautions for use

① To the ON or OFF operation switch (to be prepared by the user), current only of 24 V DC and 15 to 30 mA flows. Use a switch for minute load.
② Operate the operation switch for 0.1 s or more to turn on and for 20 ms or more to turn off. If it is operated for less than the time, it may not function.
The wire to the operation switch shall be less than 100 m.
③ The power supply module has a built-in switching power supply. Therefore, it may interfere with communication devices near the module. In such a case, install a noise filter on the input side.
④ For the automatic reset type, purchase a circuit breaker with alarm switch (for minute load), and connect the signal circuit (among the terminal numbers S1, S2 and S4) as shown in Fig. 1.

If the circuit breaker in the OFF state is tripped by UVT-N or the like, it cannot be automatically reset. To reset it, it is necessary to turn it on under no current. After this operation, it will be automatically reset.

Fig. 1

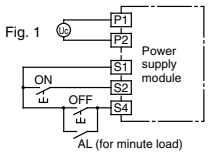

AL "a" (alarm switch for minute load)

Operation circuit

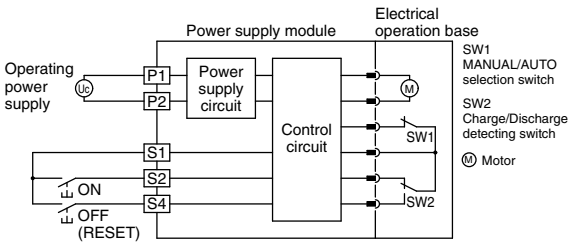

The circuit breaker is off, and the electrical operation device is in the charged state.

Symbol	Interpretation of symbol
SW1	MANUAL/AUTO selection switch
SW2	Limit switch (For spring condition detection charge/discharge)
Ⓜ	Motor

Note *1 When power is applied, inrush current (capacitor charging current) of 60 A flows to the breaker and fuse installed on the power supply circuit for 1 ms or so. When selecting the breaker and fuse, make sure that they will not cause problems, such as blowout and malfunction.

■Motor-drive type (2)

●Electrical operation

Forward and reverse motor rotation is changed by ball screw to switch the breaker ON and OFF (reset).

●Manual operation

The manual operation handle can be used to switch the breaker ON and OFF directly.

●Cautions for use

①In the case of a circuit breaker with UVT, if the circuit breaker trips owing to the operation of UVT, the procedure for re-closing the circuit breaker varies depending on the condition of the electrical operation device before the circuit breaker trips.
- Tripping in ON state: Reset (OFF). → Turn on.
- Tripping in OFF state: Turn on (idle tripping). → Reset (OFF). → Turn on.

(If the circuit breaker cannot be turned on (idle tripping), reset (OFF) it, and turn on.)
- When an automatic reset system is configured on a non-reset type circuit breaker with UVT, if UVT is set to the no-voltage state, the operations to turn off (reset), trip, turn off (reset) and trip are repeated.

Therefore, configure the circuit in such a way that power is disconnected from the electrical operation device before the circuit breaker is tripped by the non-reset type UVT.

②Current of about 0.2 A will flow to the ON-OFF switch. Use an appropriate switch.

③Do not apply ON and OFF operation signals continuously. An interval of 0.5 sec or more is necessary between ON and OFF signals.

④In the case of the automatic reset type device, it will perform the reset operation with an interval of 0.5 sec after NFB performs the tripping action.

⑤The electrical operation device has a built-in pumping preventing circuit. Therefore, it can operate to turn off the circuit breaker while the ON operation switch is held in the closing state, but it cannot turn on continuously after turning off. To turn on, once turn off the ON operation switch, and turn on the switch. Do not apply the ON operation signal continuously.

⑥The manual operating handle moves at a high speed during electrical operation. Pay attention to the handle. Keep the operation circuit power supply off during manual operation.

⑦In the manual operation, surely turn the manual operating handle to the position indicated on the nameplate.

●Operation circuit ···· For the automatic reset type, the connections indicated with the dashed lines are added.

●Operation circuit 1
[NF400-CW~NF800-UEW
NV400-CW~NV800-HEW]

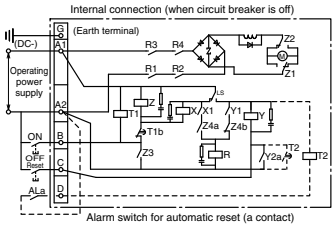

●Operation circuit 2
[NF1000-SEW~NF1600-SEW]

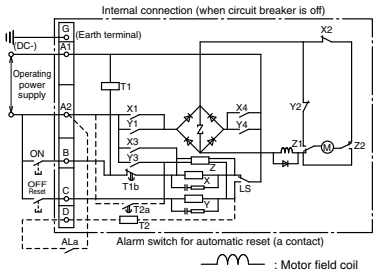

Ⓜ : Motor
X : Relay for ON operation
Y : Relay for OFF operation
R : Motor driving relay
Z : Polarity switching relay (Operation circuit 1 or 2)
(R1)~(R4): Relay switches

Z, K: Exciting coil of keep relay (Operation circuit 3)
LS, LS1, LS2: Limit switches
X1~X4, Y1~Y4, Y2a, Z4a, Z4b, Z1, Z2, Z3, K1, T1b, T2a: Relay switches
T_1 : Pumping preventing timer
T_2 : Timer for automatic reset

: Motor field coil
: Surge absorbing circuit
: Surge absorber

■Spring charge type (2)

●Electrical operation

When the ON operation switch is closed, the closing coil will be excited to release the latch mechanism, and the closing spring force will instantaneously turn on the circuit breaker. When the OFF operation switch is closed, the relay will operate to start the motor, turn off (reset) the circuit breaker and, at the same time, charge the closing spring.

●Manual operation

- Press the ON button, and the latch mechanism will be released, and the closing spring force will instantaneously turn on the circuit breaker.
- Turning off (resetting)
  Push the leaf spring, bring out the manual handle, and move the handle upward and downward more than ten times. Then, the circuit breaker will be turned off (reset), and, at the same time, the closing spring will be charged.

●Cautions for use

①In Before installing or removing the electrical operation device to or from the circuit breaker, trip the circuit breaker, and discharge the electrical operation device. After the device is installed to the circuit breaker, the device will not trip the circuit breaker in the OFF state even if the trip button is pressed. This is not a trouble.
The electrical operation device takes 3 seconds to turn off the circuit breaker. To open the circuit immediately by remote operation, use a circuit breaker with SHT or UVT.
- The device has a built-in pumping preventing relay.

②Current of about 9 A and 0.2 A will flow to the ON and OFF switches, respectively. Use appropriate switches.

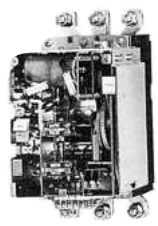

Internal structure of spring charge type

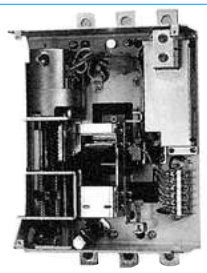

Internal structure of motor-drive type

●Operation circuit

For the automatic reset type, the connections indicated with the dashed lines are added.

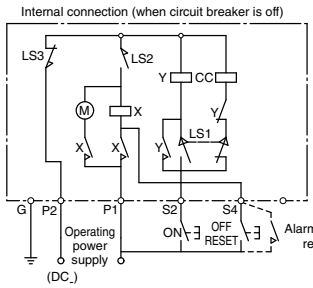

CC : Coil for making
Y : Relay for pumping prevention
X : Relay for self-sustaining on OFF side
LS1: Limit switch interlocking with cam
LS2: Limit switch interlocking with cam
LS3: Limit switch interlocking with OFF lock plate
M : Motor

9. Distribution Board Mounting Parts, Lock Covers and Handle Caps

●BPA-type mounting base (for BH-P)

Single-phase-type

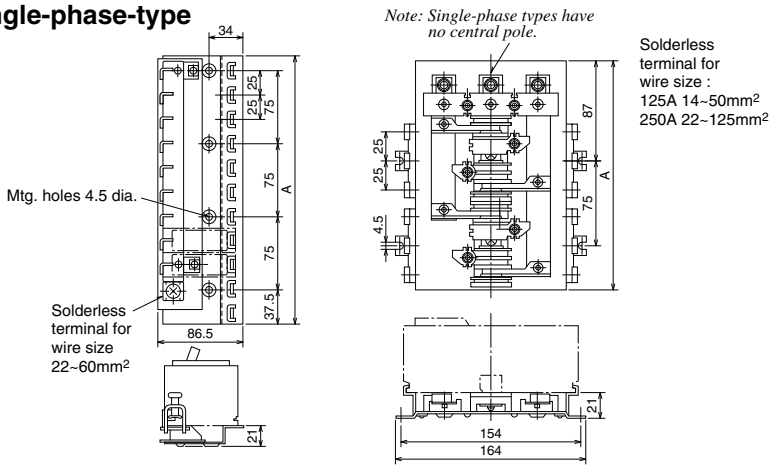

Three-phase-type

Max. no. of ways	1ph, 2w	1ph, 3w		3ph, 4w		Neutral terminal
	Main : 125A	Main : 125A	Main : 250A	Main : 125A	Main : 250A	
6	BPA-1106	BPA-2106	–	BPA-3106	–	NT-06
9	BPA-1109	–	–	–	–	–
12	BPA-1112	BPA-2112	–	BPA-3112	–	NT-12
15	BPA-1115	–	–	–	–	–
18	BPA-1118	BPA-2118	BPA-2218	BPA-3118	BPA-3218	NT-18
24	–	BPA-2124	BPA-2224	BPA-3124	BPA-3224	NT-24
30	–	–	BPA-2230	–	BPA-3230	NT-30
36	–	–	BPA-2236	–	BPA-3236	NT-36
42					BPA-3242	NT-42

●Mounting plate (for BH)

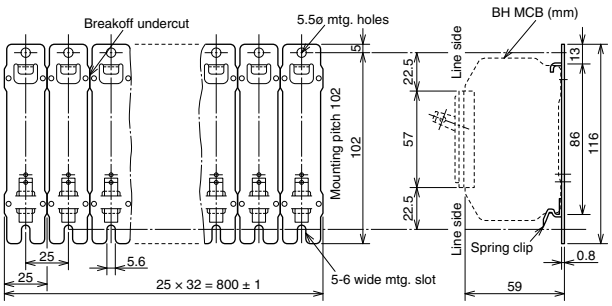

One mounting plate has 32 circuits.
One package includes 10 mounting plates (320 circuits).

●Lock covers and handle caps (for 1-pole, 2-pole and 3-pole types)

Many panelboards include some restricted-operation circuits, which must either normally remain on, such as all-night lighting or alarms, or must remain off, such as spare circuits, or circuits used in repair or construction work. Breakers for such circuits can be locked by simply installing a lock cover on the handle.

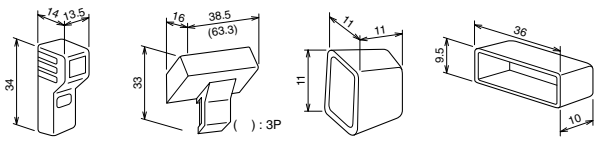

a) Lock cover for 1-pole units
b) Lock cover for 2-pole, 3-pole units
c) Handle cap for 1-pole units
d) Handle cap for 2-pole units

Outlines and dimensions (mm)

Colors available

Fig. ref.	Item	Poles	Colors		
			Red	Yellow	Green
a)	Lock cover	1	LCBH1R	LCVH1Y	–
b)		2	LCBH2R	LCBH2Y	–
b)		3	LCBH3R	LCBH3Y	–
c)	Cap	1	HC1R	HC1Y	HC1G
d)		2	HC2R	HC2Y	HC2G

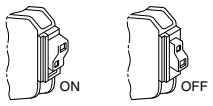

Lock cover in place (1-pole unit)

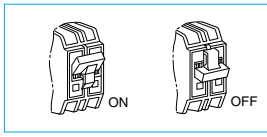

Lock cover in place (2-pole unit)

10. IEC 35-mm Rail Mounting Adapters

Table 6-45

Type name	Number of poles of circuit breaker	Applicable model		Fig.
		MCCB	ELCB	
DIN-03CS	2, 3	NF30-CS	–	Fig. 1
(Note1) DIN-05SV	2, 3	NF32-SV NF63-CV/SV/HV	NV32-SV NV63-CV/SV/HV	Fig. 2

Remark: 1. Place an order in units of 10 pieces.

●External dimension

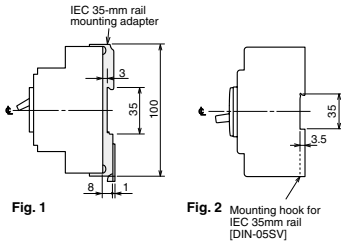

Fig. 1 Fig. 2

MEMO

7

Characteristics and Dimensions

1 Molded Case Circuit Breakers 140

- NF30-CS 140
- NF32-SV, NF63-CV/SV/HV 142
- NF125-CV/SV/HV 144
- NF125-SXV 146
- NF125-LXV/HXV 148
- NF125-UV 150
- NF250-CV/SV/HV 152
- NF250-SXV/LXV/HXV 154
- NF250-UV 156
- NF125-SGV/LGV/HGV/RGV, NF160-SGV/LGV/HGV, NF250-SGV/LGV/HGV/RGV 158
- NF125-SEV/HEV, NF250-SEV/HEV 160
- NF400-CW/SW 162
- NF400-SEW/HEW/REW 164
- NF400-UEW 166
- NF630-CW/SW 168
- NF630-SEW/HEW/REW 170
- NF800-CEW/SEW/HEW/REW 172
- NF800-SDW 174
- NF800-UEW 176
- NF1000-SEW, NF1250-SEW 178
- NF1250-SDW 180
- NF1600-SEW 182
- NF1600-SDW 184

2 Earth Leakage Circuit Breakers 186

- NV32-SV, NV-63CV/SV/HV 186
- NV125-CV/SV/HV 188
- NV250-CV/SV/HV 190
- NV125-SEV/HEV, NV250-SEV/HEV 192
- NV400-CW/SW 194
- NV400-SEW/HEW/REW 196
- NV630-CW/SW 198
- NV630-SEW/HEW 200
- NV800-SEW/HEW 202

3 UL 489 Listed Circuit Breakers 204

- NF50-SVFU, NV50-SVFU 204
- NF100-CVFU, NV100-CVFU 206
- NF125-SVU/HVU, NV125-SVU/HVU 208
- NF225-CWU 210
- NF250-SVU/HVU, NV250-SVU/HVU 212
- NF400-SWU/HWU 214
- NF630-SWU/HWU 216

4 Measuring Display Unit Breakers 218

- NF250-SEV/HEV with MDU 218
- NF400-SEP/HEP with MDU 220
- NF630-SEP/HEP with MDU, NF800-SEP/HEP with MDU ... 222

5 Miniature Circuit Breakers, Residual Current Circuit Breakers, Isolators 224

- BH,BH-P 224
- BHW-T10(0.5 to 63A) 225
- BHW-T10(80 to 125A) 226
- BVW-T 227
- KBW-T 228

6 Circuit Protectors 230

- CP30-BA 230

7 Electrical Operated Circuit Breakers 231

NF30-CS

NF30-CS

Model				NF30-CS	
Rated current In (A)				3, 5, 10, 15, 20, 30	
Number of poles				2	3
Rated insulation voltage Ui (V)				500	
Rated short-circuit breaking capacity (kA)	IEC 60947-2 (Icu/Ics)	AC	690V	–	
			500V	–	
			415V	1.5/1.5	
			380V	1.5/1.5	
			240V	2.5/2	
Standard Attached Parts (Front connection)				Mounting screw: M4×0.7×20 (2pcs)	

Operating Characteristics

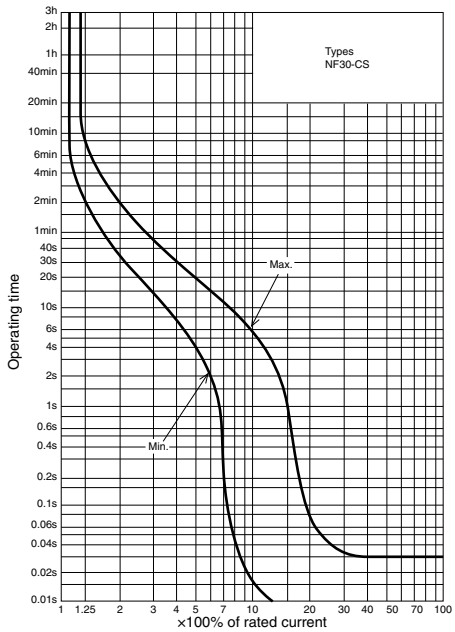

Internal Accessories

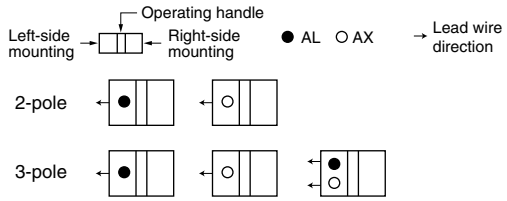

Remarks: 1. Standard lead wire is drawn from side. However, lead wire drawn by load can be produced upon request.
2. Refer to page 104.

Temperature Characteristics Curve

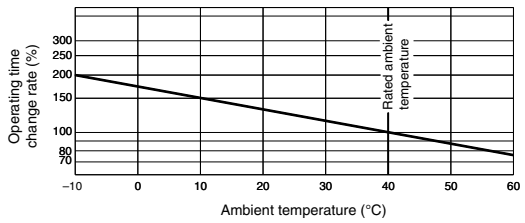

External Accessories

Accessories			Type name	Reference page
Terminal cover	Small	(TC-S)	TCS-03CS3W (*1)	121
	Large	(TC-L)	TCL-03CS3W (*1)	
	Rear	(BTC)	BTC-03CS3W (*1)	
	Skeleton	(TTC)	TTC-03CS (*1)	
Handle lock		(HL)	HL-05FH	127
Lock cover		(LC)	LC03CS	128
IEC 35mm rail mounting adapter		(DIN)	DIN-03CS	137

Note *1 The designation depends on the number of poles. Refer to the reference page.

Outline Drawing

Front connection

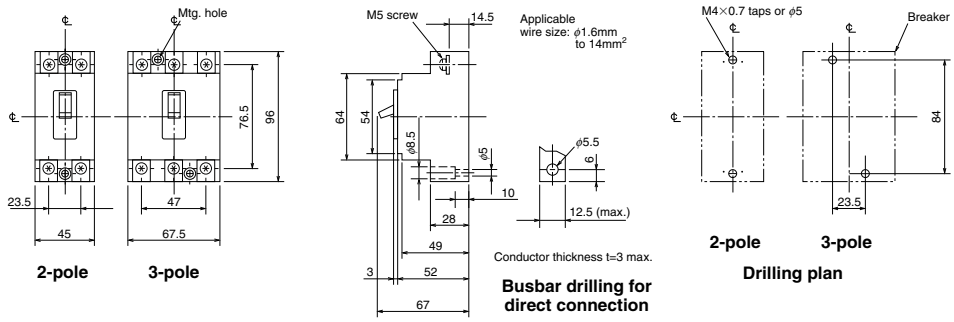

Rear connection

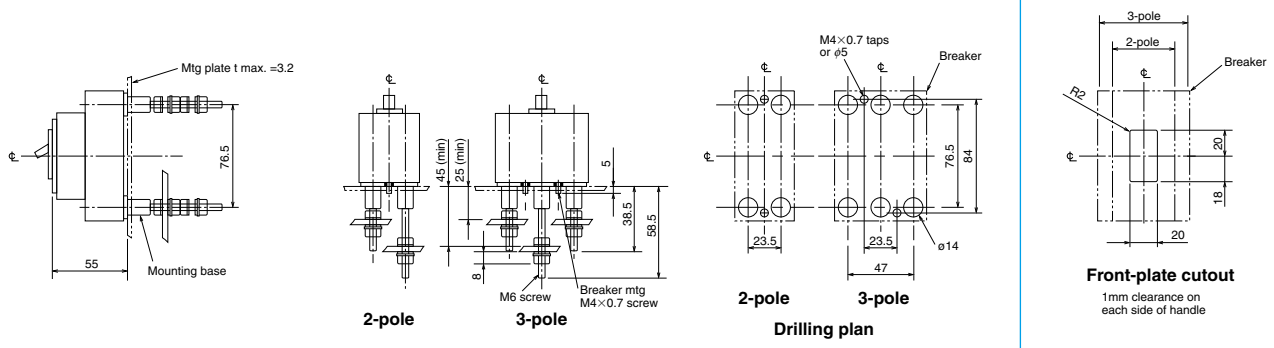

IEC Rail Mounting Adapter

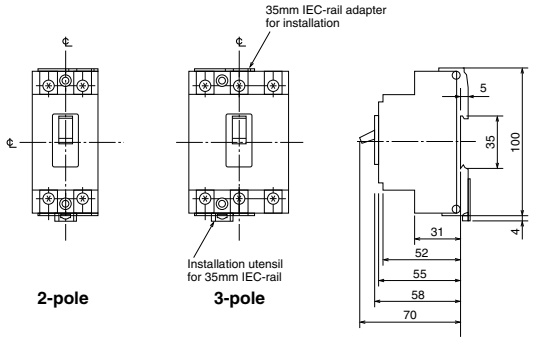

NF32-SV
NF63-CV
NF63-SV
NF63-HV

NF63-SV

Model				NF32-SV		NF63-CV		NF63-SV			NF63-HV		
Rated current In (A)				3 4 (5) 6 10 (15) 16 20 25 (30) 32		3 4 (5) 6 10 (15) 16 20 25 (30) 32 40 50 (60) 63		3 4 (5) 6 10 (15) 16 20 25 (30) 32 40 50 (60) 63			10 (15) 16 20 25 (30) 32 40 50 (60) 63		
Number of poles				2	3	2	3	2	3	4	2	3	4
Rated insulation voltage Ui (V)				600		600		600			690		
Rated short-circuit breaking capacity (kA)	IEC 60947-2 (Icu/Ics)	AC	690V	–		–		–			2.5/2.5		
			500V	2.5/2.5		2.5/2.5		7.5/7.5			7.5/7.5		
			440V	2.5/2.5		2.5/2.5		7.5/7.5			10/8		
			415V	2.5/2.5		2.5/2.5		7.5/7.5			10/8		
			400V	5/5		5/5		7.5/7.5			10/8		
			380V	5/5		5/5		7.5/7.5			10/8		
			230V	7.5/7.5		7.5/7.5		15/15			25/19		
		DC	250V (*1)	2.5/2.5		2.5/2.5		7.5/7.5			7.5/7.5		
Standard attached parts (front connection)				Mounting screw: M4×0.7×55 (2 and 3P: 2pcs, 4P: 4pcs) Insulation barrier: (2P: 1pc, 3P: 2pcs, 4P: 3pcs) (*2)									

Notes *1 Use two poles for three- and four-pole products. Not available for use with connection as shown at the bottom of page 14.
*2 Supplied with NF63-SV and NF63-HV.

Operating Characteristics

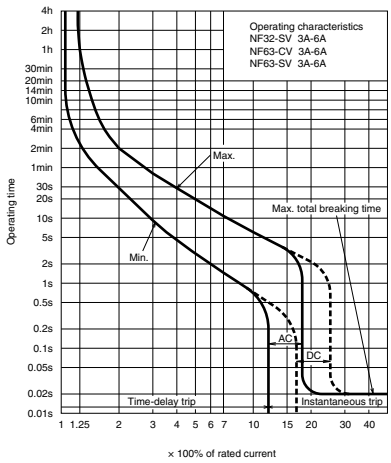

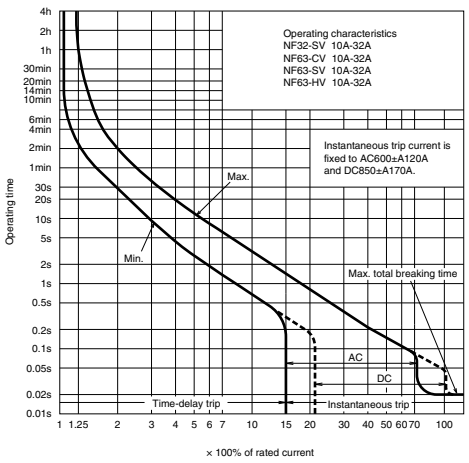

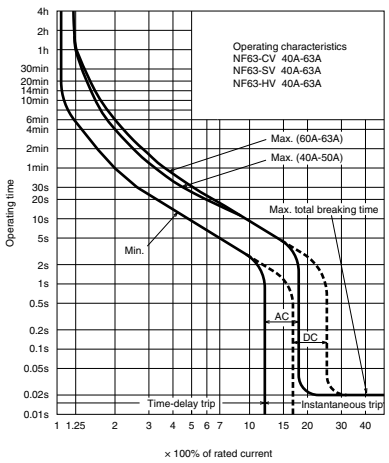

Internal Accessories

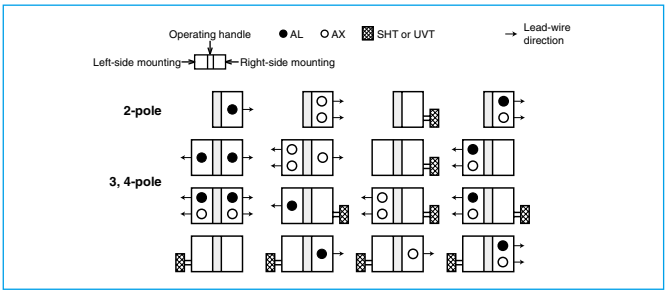

Temperature Compensation Curve

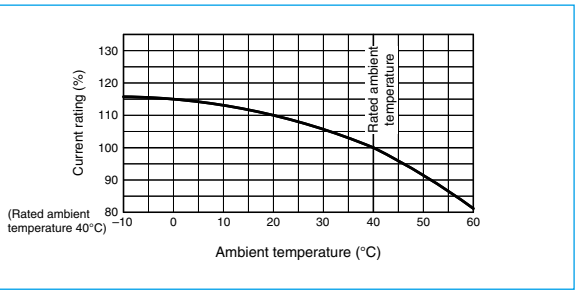

External Accessories

Accessories			Type name	Reference page
Operating handle	F	2P	F-05SV2	117
		3, 4P	F-05SV	
	V	2P	V-05SV2	119
		3, 4P	V-05SV	
Handle lock device	LC		LC-05SV	127
	HL(*1)		HLF-05SV	
			HLN-05SV	
	HL-S		HLS-05SV	

Note *1 HLF types are used for OFF lock and HLN types for ON lock.

Accessories				Type name	Reference page
Mechanical interlock		MI	2, 3P	MI-05SV3	129
			4P	MI-05SV4	
Terminal cover	Small	TC-S	2P	TCS-05SV2	121
			3P	TCS-05SV3	
	Large	TC-L	2P	TCL-05SV2	
				TCL-05SV2L	
			3P	TCL-05SV3	
				TCL-05SV3L	
			4P	TCL-05SV4	
	Skeleton	TTC	2P	TTC-05SV2	
			3P	TTC-05SV3	
	Rear	BTC	2P	BTC-05SV2	
			3P	BTC-05SV3	
	Plug-in	PTC	2P	PTC-05SV2	
			3P	PTC-05SV3	
IEC 35mm rail mounting adapters				DIN-05SV	137

Outline Drawing

Front connection

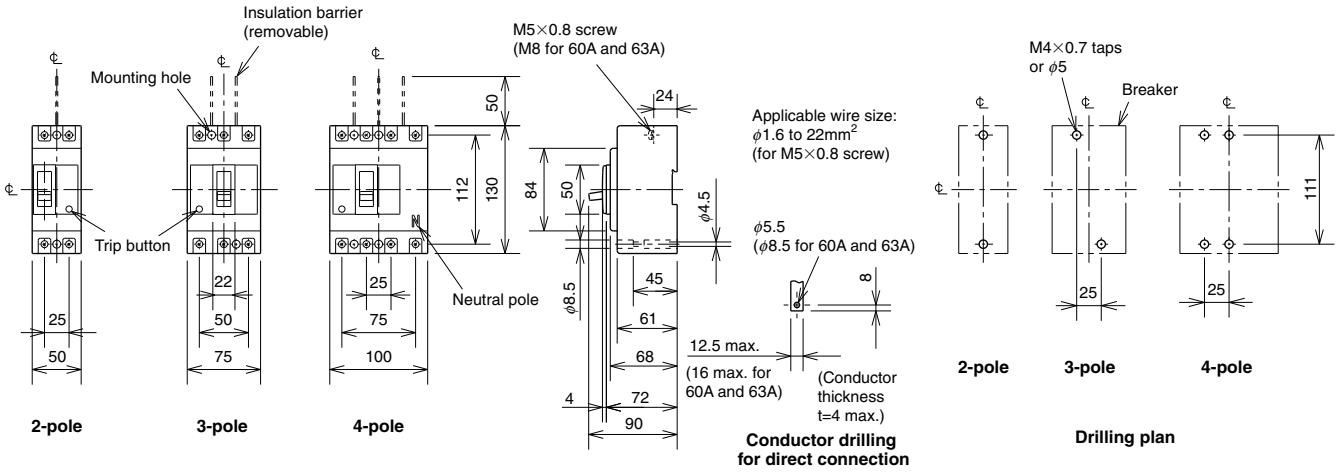

Rear connection

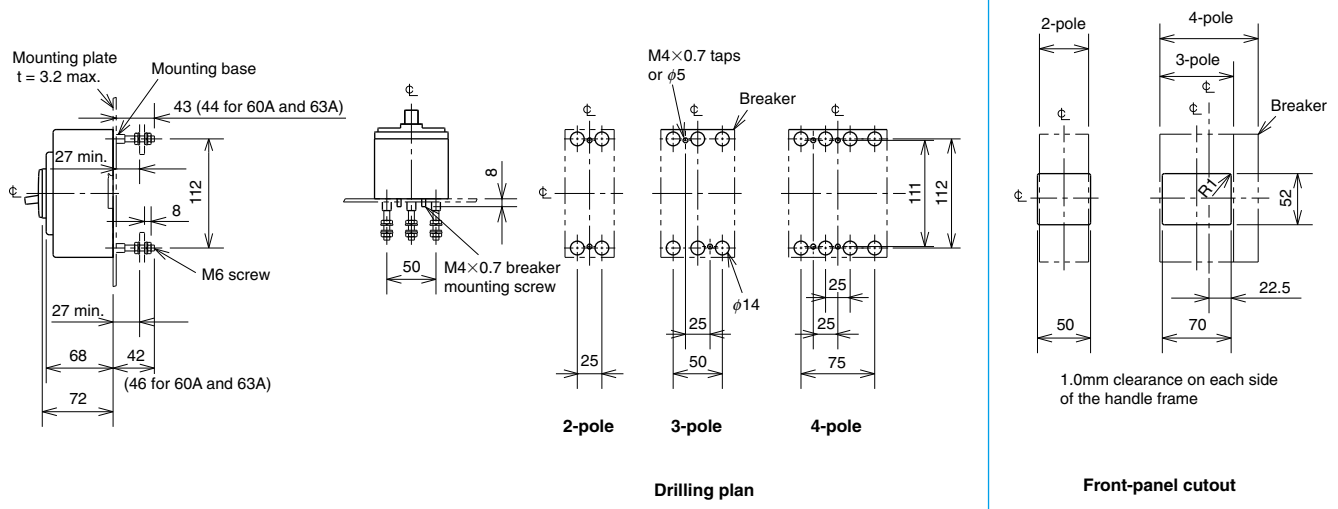

Plug-in

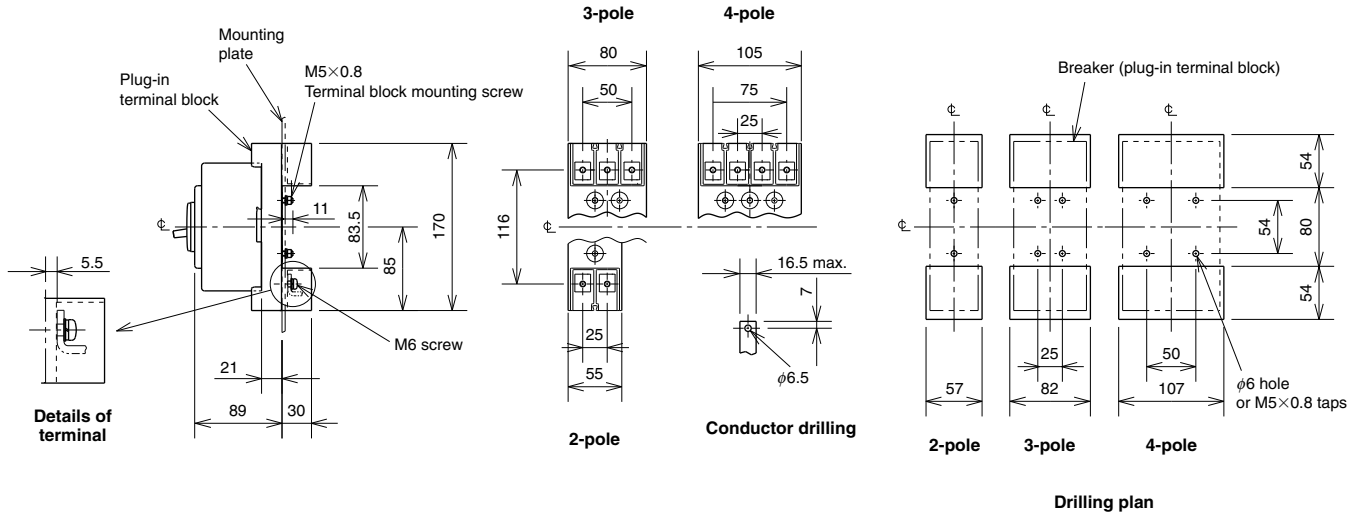

Remark: 1. Only 2-pole and 3-pole models are available for NF32-SV and NF63-CV.

NF125-CV
NF125-SV
NF125-HV

NF125-SV

Model				NF125-CV		NF125-SV			NF125-HV		
Rated current In (A)				50 (60) 63 (75) 80 100 125		(15) 16 20 (30) 32 40 50 (60) 63 (75) 80 100 125			(15) 16 20 (30) 32 40 50 (60) 63 (75) 80 100 125		
Number of poles				2	3	2	3	4	2	3	4
Rated insulation voltage Ui (V)				600		690			690		
Rated short-circuit breaking capacity (kA)	IEC 60947-2 (Icu/Ics)	AC	690V	–		8/8			10/8		
			500V	7.5/4		18/18			30/23		
			440V	10/5		25/25			50/38		
			415V	10/5		30/30			50/38		
			400V	10/5		30/30			50/38		
			380V	10/5		30/30			50/38		
			230V	30/15		50/50			100/75		
		DC	250V (*1)	7.5/4		40/40			–		
Standard attached parts (front connection)				Mounting screw: M4×0.7×55 (2 and 3P: 2pcs, 4P: 4pcs) (*2) Insulation barrier: (2P: 1pc, 3P: 2pcs, 4P: 3pcs)							

Notes *1 Use two poles for three- and four-pole products.
If wired as shown at the bottom on page 14, three and four poles can be used for up to 400 and 500VDC, respectively.
*2 Supplied with NF125-SV and NF125-HV.

Operating Characteristics

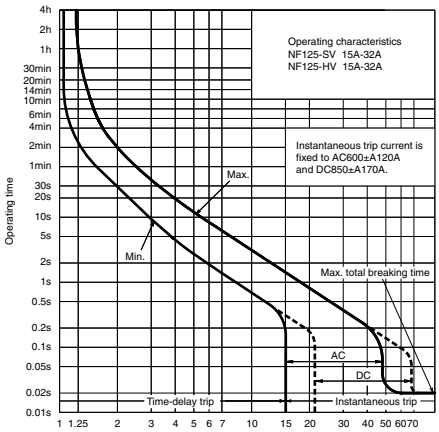

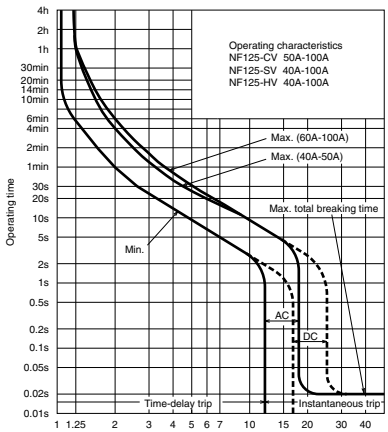

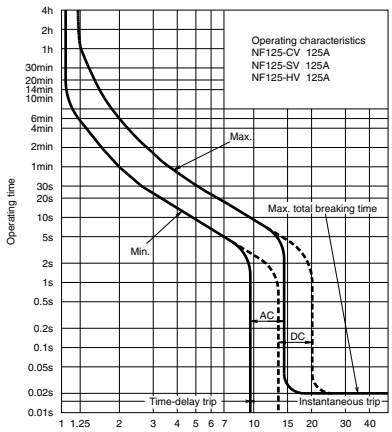

Internal Accessories

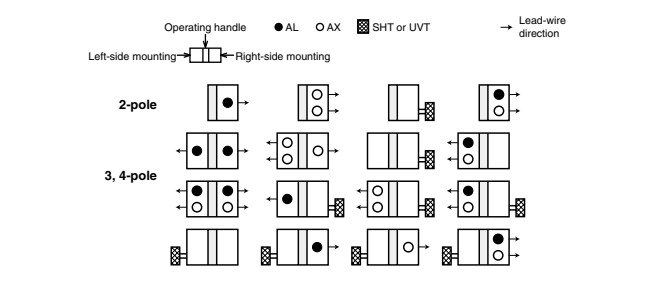

Temperature Compensation Curve

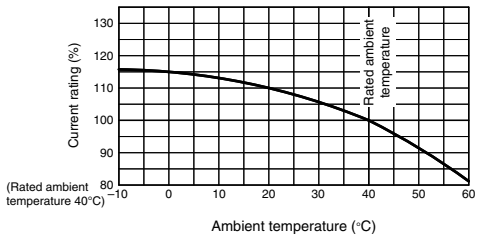

External Accessories

Accessories			Type name	Reference page
Operating handle	F	2P	F-1SV2	117
		3, 4P	F-1SV	
	V	2P	V-1SV2	119
		3, 4P	V-1SV	
Handle lock device	LC		LC-05SV	127
	HL(*1)		HLF-05SV	
			HLN-05SV	
	HL-S		HLS-05SV	

Notes *1 HLF types are used for OFF lock and HLN types for ON lock.
*2 Specify the working voltage. Refer to the reference page for type name.

Accessories				Type name	Reference page
Mechanical interlock		MI	2, 3P	MI-05SV3	129
			4P	MI-05SV4	
Terminal cover	Small	TC-S	2P	TCS-1SV2	121
			3P	TCS-1SV3	
	Large	TC-L	2P	TCL-1SV2	
			3P	TCL-1SV3	
			4P	TCL-1SV4	
	Skeleton	TTC	2P	TTC-1SV2	
			3P	TTC-1SV3	
	Rear	BTC	2P	BTC-1SV2	
			3P	BTC-1SV3	
	Plug-in	PTC	2P	PTC-1SV2	
			3P	PTC-1SV3	
Electrical operation device				(*2)	133

Outline Drawing

Front connection

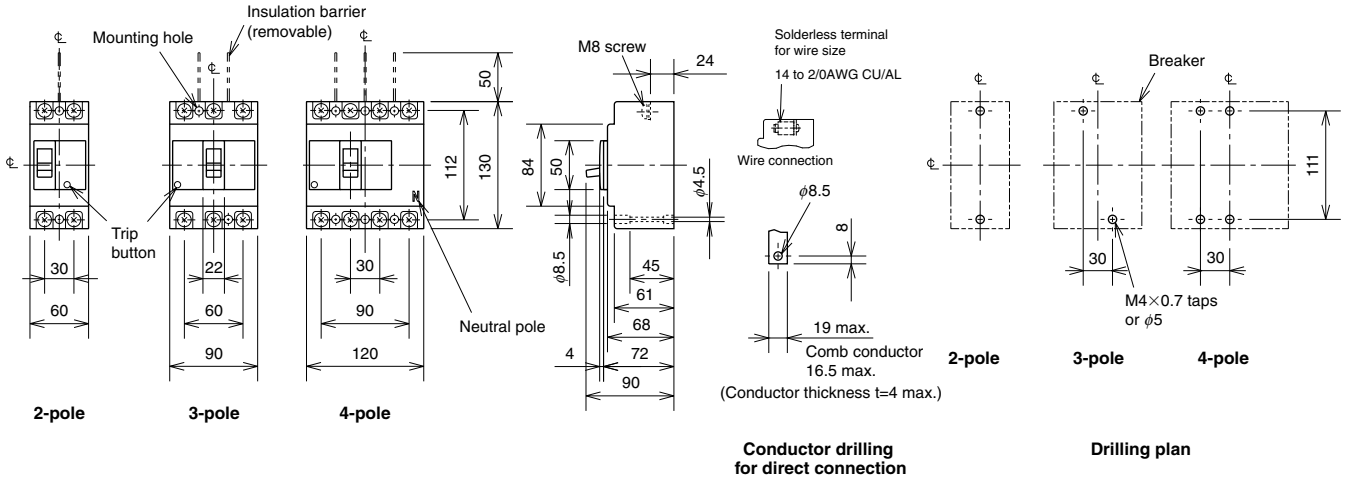

Rear connection

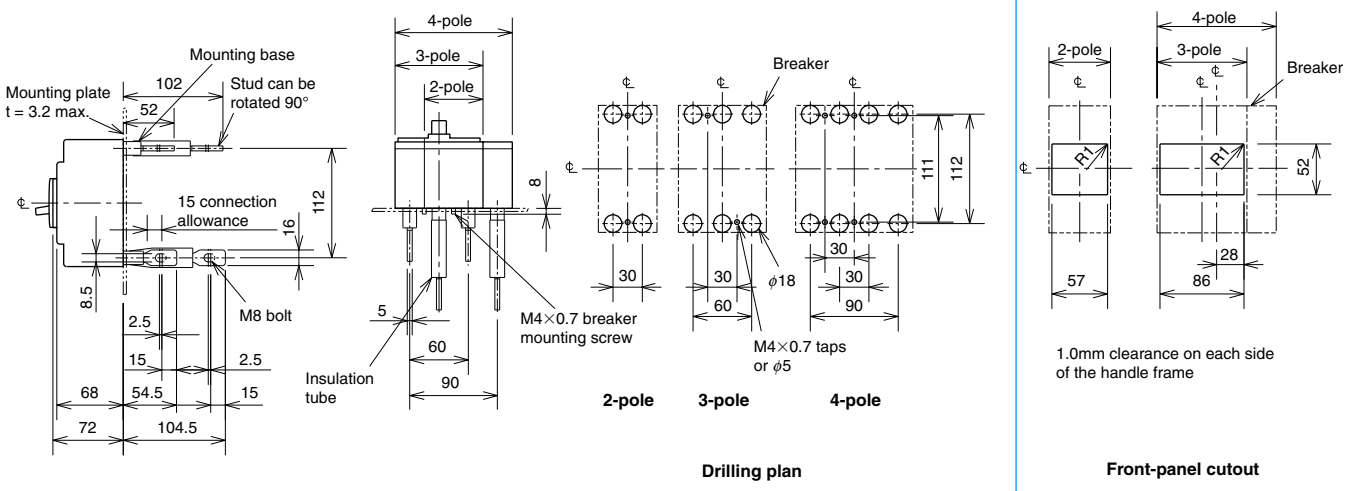

Plug-in

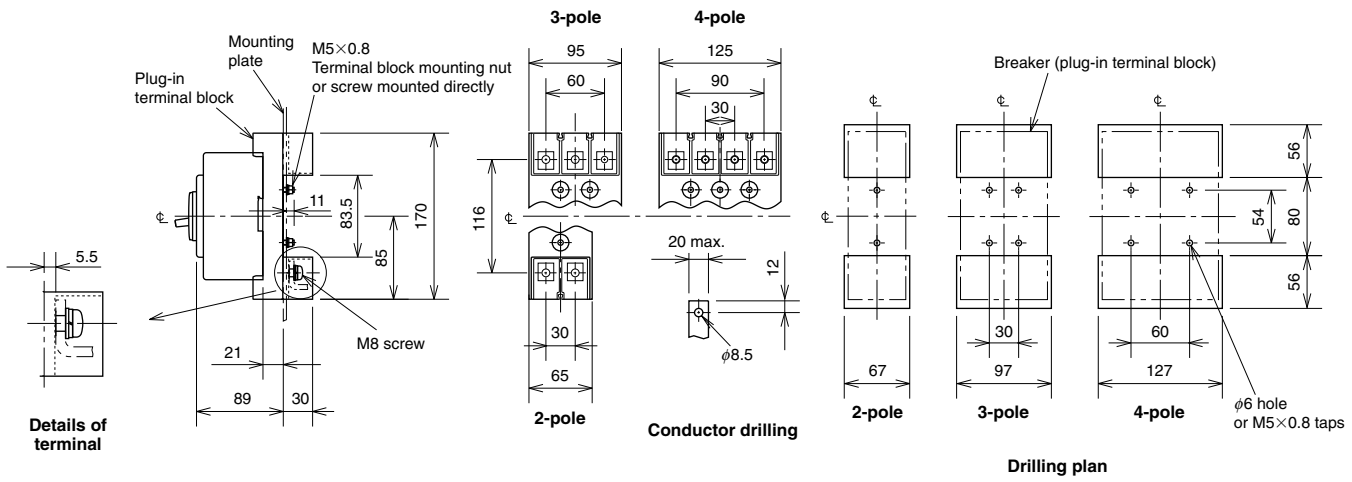

Remarks: 1. The 2-pole models of NF125-HV are 3-pole models with the central pole removed.
2. Only 2-and 3-pole models are available for NF125-CV.

NF125-SXV

NF125-SXV

Model				NF125-SXV		
Rated current In (A)				(15) 16 20 (30) 32 40 50 (60) 63 (75) 80 100 125		
Number of poles				2	3	4
Rated insulation voltage Ui (V)				690		
Rated short-circuit breaking capacity (kA)	JIS C 8201-2-1 Ann.1 IEC 60947-2 EN 60947-2 (Icu/Ics)	AC	690V	8/8		
			500V	23/23		
			440V	36/36		
			415V	36/36		
			400V	36/36		
			380V	36/36		
			230V	75/75		
			200V	75/75		
		DC	300V	–		
Standard attached parts (front connection)				Mounting screw: M4x0.7x55(2 and 3P: 2pcs, 4P: 4pcs) Insulation barrier: (2P: 1pc, 3P: 2pcs, 4P: 3pcs/NF125-SXV)		

Operating Characteristics

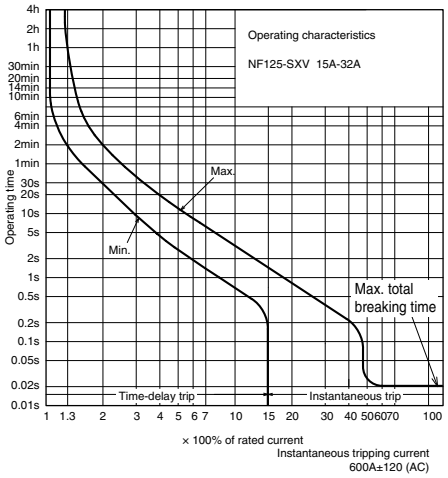

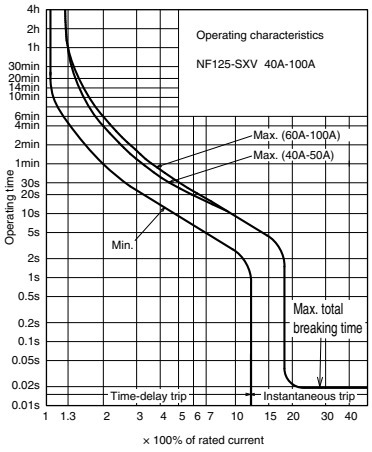

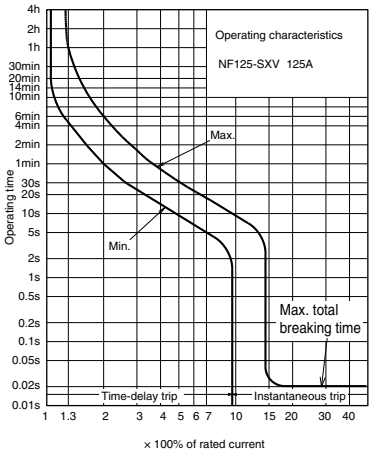

Internal Accessories

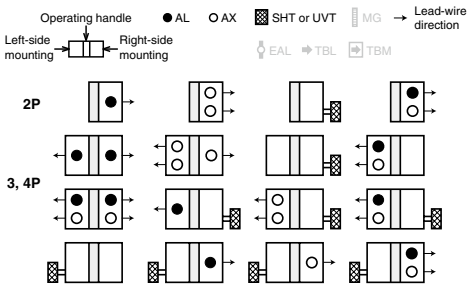

Temperature Compensation Curve

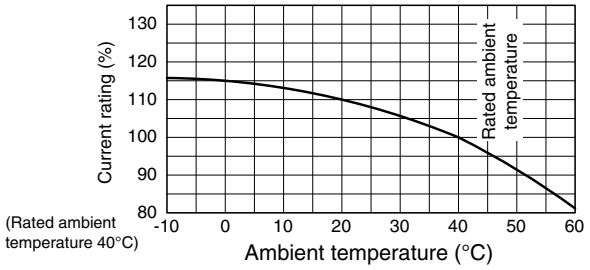

External Accessories

Accessories			Type name	Reference page
Operating handle	F	2, 3, 4P	F-1SV	119
	V	2, 3, 4P	V-1SV	121
Lock cover	LC		LC-05SV	129
Handle lock device	HL (*1)		HLF-05SV	
			HLN-05SV	
	HL-S		HLS-1SV	

Notes *1 HLF types are used for OFF lock and HLN types for ON lock.
*2 Specify the working voltage. Refer to the reference page for type name.

Accessories				Type name	Reference page
Mechanical interlock		MI	2, 3P	MI-05SV3	131
			4P	MI-05SV4	
Terminal cover	Small	TC-S	2, 3P	TCS-1SV3	123-126
	Large	TC-L	2, 3P	TCL-1SV3	
			4P	TCL-1SV4	
	Skeleton	TTC	2, 3P	TTC-1SV3	
	Rear	BTC	2, 3P	BTC-1SV3	
	Plug-in	PTC	2, 3P	PTC-1SV3	
Electrical operation device				(*2)	135

Outline Drawing

Front connection

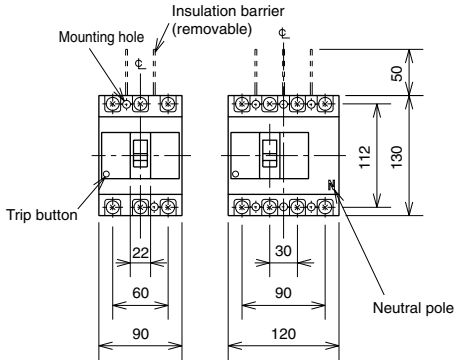

3-pole 4-pole

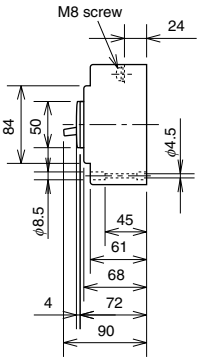

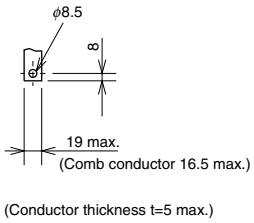

Conductor drilling for direct connection

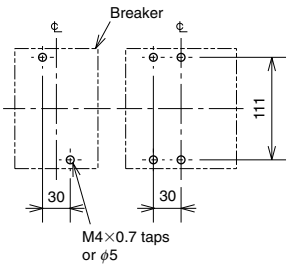

3-pole 4-pole

Drilling plan

Rear connection

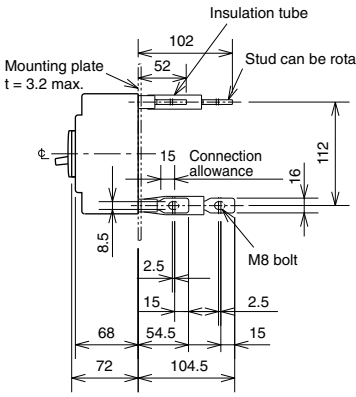

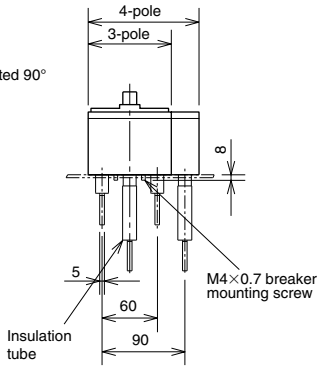

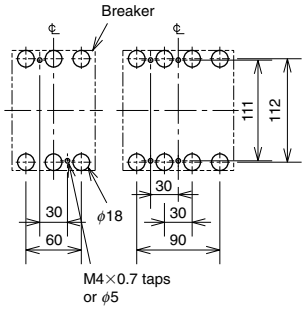

3-pole 4-pole

Drilling plan

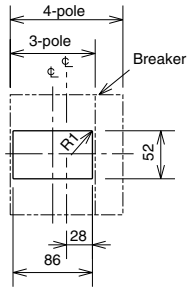

1.0mm clearance on each side of the handle frame

Front-panel cutout

Plug-in

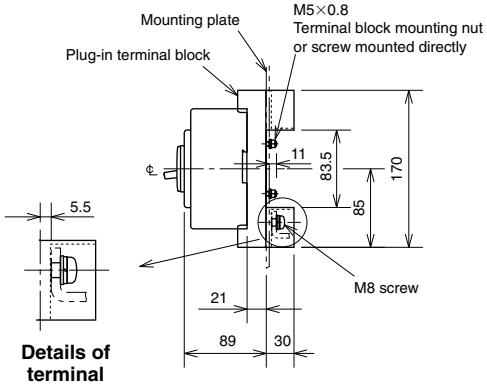

Details of terminal

3-pole 4-pole

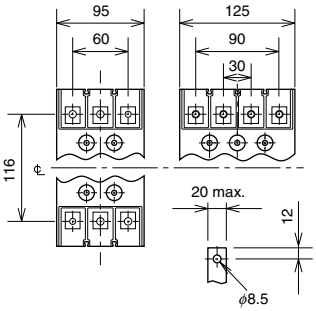

Conductor drilling

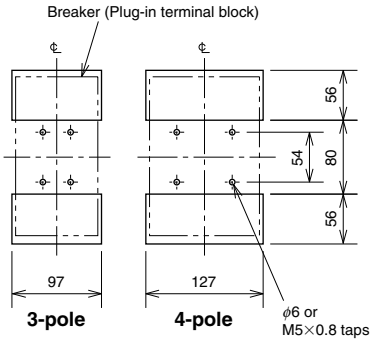

3-pole 4-pole

Drilling plan

Remark: 1. 2-pole models are 3-pole models with the central pole removed.

NF125-LXV
NF125-HXV

NF125-HXV

Model				NF125-LXV			NF125-HXV		
Rated current In (A)				(15) 16 20 (30) 32 40 50 (60) 63 (75) 80 100 125			(15) 16 20 (30) 32 40 50 (60) 63 (75) 80 100 125		
Number of poles				2	3	4	2	3	4
Rated insulation voltage Ui (V)				690			690		
Rated short-circuit breaking capacity (kA)	JIS C 8201-2-1 Ann.1 IEC 60947-2 EN 60947-2 (Icu/Ics)	AC	690V	8/8			10/8		
			500V	36/36			50/38		
			440V	50/50			65/65		
			415V	50/50			70/70		
			400V	50/50			75/75		
			380V	50/50			75/75		
			230V	90/90			100/100		
			200V	90/90			100/100		
		DC	300V	20/20 (*1)			40/40 (*1)		
Standard attached parts (front connection)				Mounting screw: M4x0.7x55(2 and 3P: 2pcs, 4P: 4pcs) Insulation barrier: (2P: 2pc, 3P: 4pcs, 4P: 6pcs/NF125-LXV/NF125-HXV)					

Note *1 When wired as shown at the bottom of page 14, three-pole models can be used for up to 500VDC, and four-pole models for up to 600VDC.

Operating Characteristics

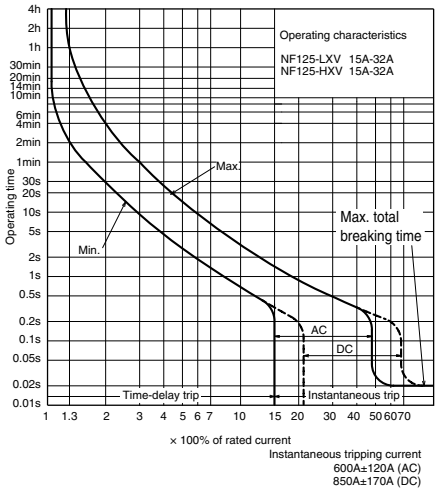

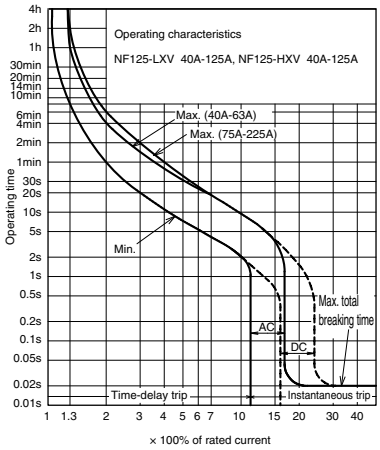

Internal Accessories

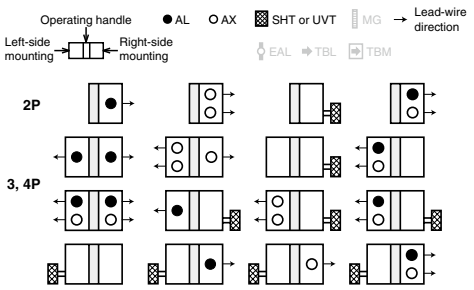

Temperature Compensation Curve

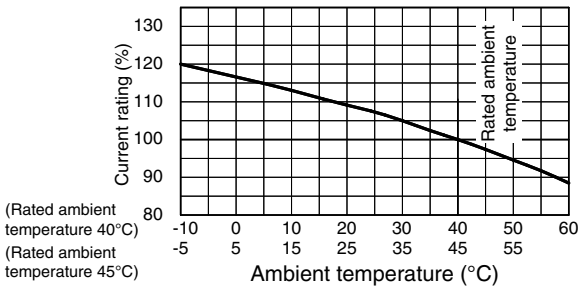

External Accessories

Accessories		Type name	Reference page
Operating handle	F	F-2SV	119
	V	V-2SV	121
Lock cover	LC	LC-05SV	129
Handle lock device	HL (*1)	HLF-05SV	
		HLN-05SV	
	HL-S	HLS-2SV	

Notes *1 HLF types are used for OFF lock and HLN types for ON lock.
*2 Specify the working voltage. Refer to the reference page for type name.

Accessories				Type name	Reference page
Mechanical interlock		MI	2, 3P	MI-05SV3	131
			4P	MI-2SV4	
Terminal cover	Small	TC-S	2, 3P	TCS-2SV3	123
	Large	TC-L	2, 3P	TCL-2SV3	
				TCL-2SV3L	
			4P	TCL-2SV4	
	Skeleton	TTC	2, 3P	TTC-2SV3	
	Rear	BTC	2, 3P	BTC-2SV3	
	Plug-in	PTC	2, 3P	PTC-2SV3	
Electrical operation device				(*2)	135

Outline Drawing

Front connection

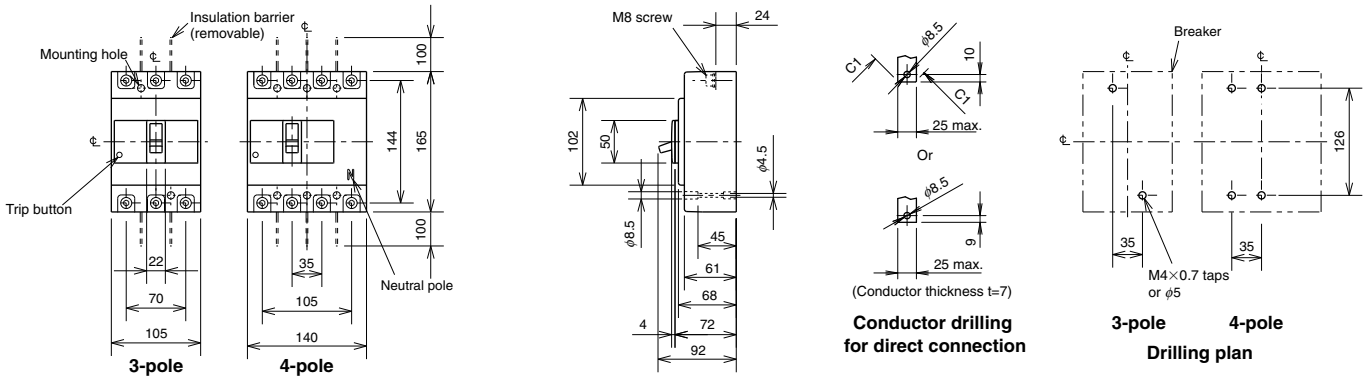

Rear connection

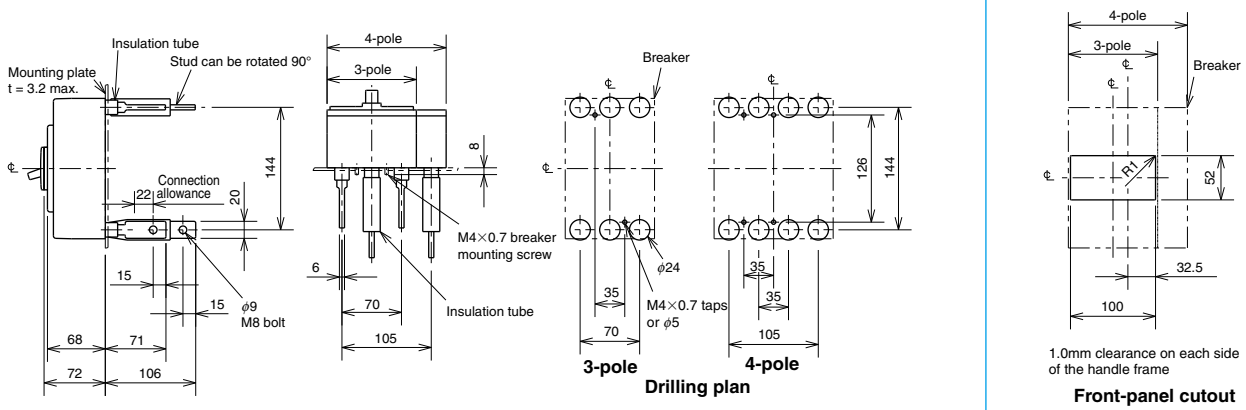

Plug-in

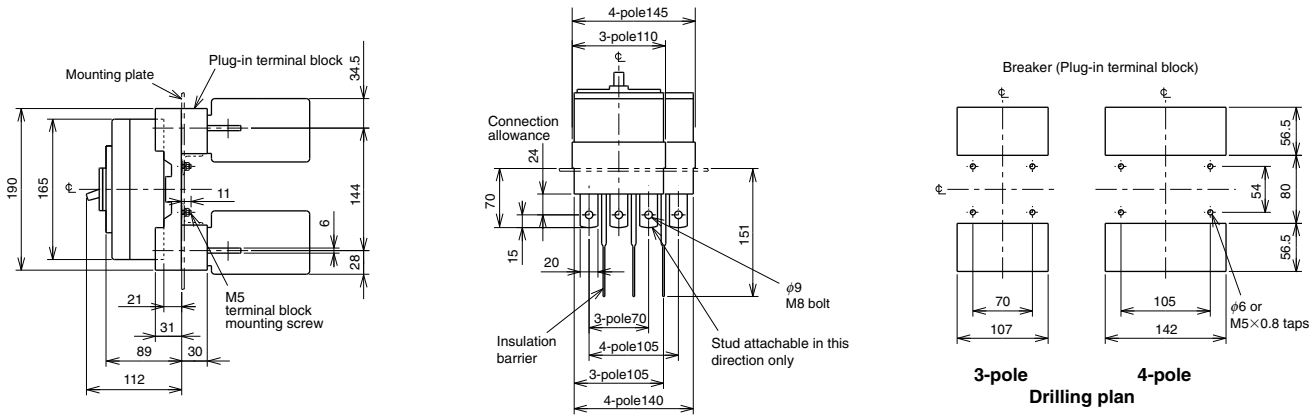

Remark: 1. 2-pole models are 3-pole models with the central pole removed.

NF125-UV

NF125-UV

Model				NF125-UV		
Rated current In (A)				15 20 30 40 50 60 75 100 125		
Number of poles				2	3	4
Rated insulation voltage Ui (V)				690		
Rated short-circuit breaking capacity (kA)	IEC 60947-2 (Icu/Ics)	AC	690V	10/10		
			500V	200/200		
			440V	200/200		
			415V	200/200		
			400V	200/200		
			380V	200/200		
			230V	200/200		
		DC	250V	–		
Standard attached parts (front connection)				Mounting screw: M4×0.7×55 (2 and 3P: 2pcs, 4P: 4pcs) M4×0.7×73 (2 and 3P: 2pcs)		

Operating Characteristics

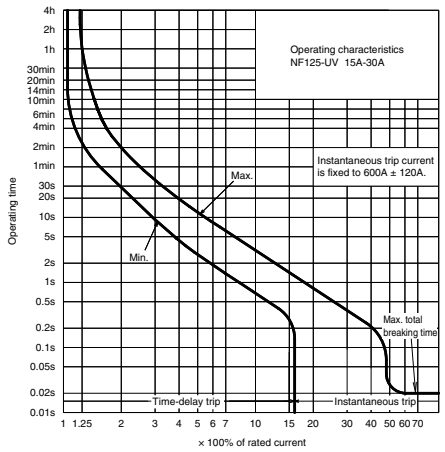

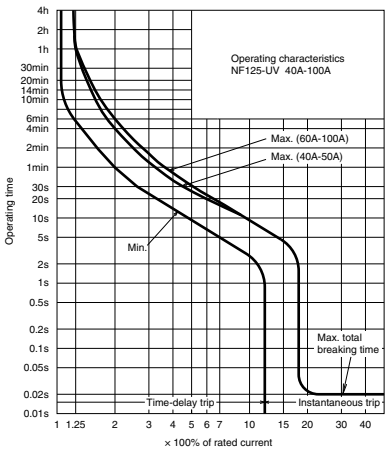

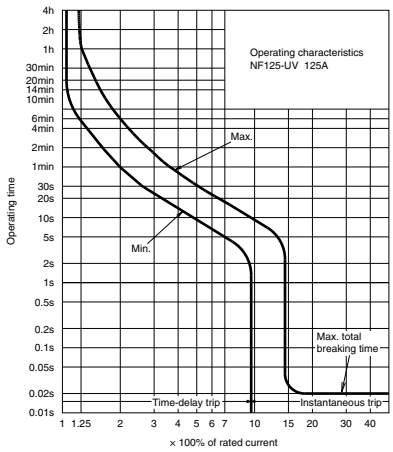

Internal Accessories

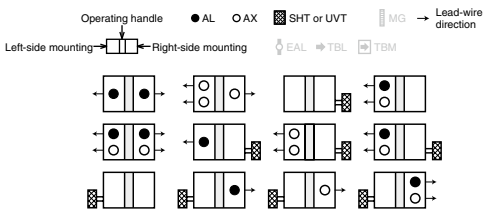

Temperature Compensation Curve

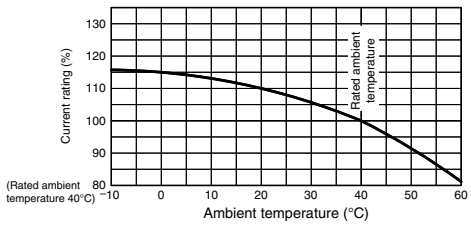

External Accessories

Accessories		Type name	Reference page
Operating handle	F	F-1UV	117
	V	V-1UV	119
Lock cover	LC	LC-05SV	127
Handle lock device	HL (*1)	HLF-05SV	
		HLN-05SV	
	HL-S	HLS-05SV	

Notes *1 HLF types are used for OFF lock and HLN types for ON lock.
*2 Specify the working voltage. Refer to the reference page for type name.

Accessories				Type name	Reference page
Mechanical interlock		MI	2, 3P	MI-05SV3	129
			4P	MI-05SV4	
Terminal cover	Small	TC-S	3P	TCS-1SV3	
	Large	TC-L	3P	TCL-1SV3	121
			4P	TCL-1SV4	
	Skeleton	TTC	3P	TTC-1SV3	
	Rear	BTC	3P	BTC-1SV3	
	Plug-in	PTC	3P	PTC-1SV3	
Electrical operation device				(*2)	133

Outline Drawing

Front connection

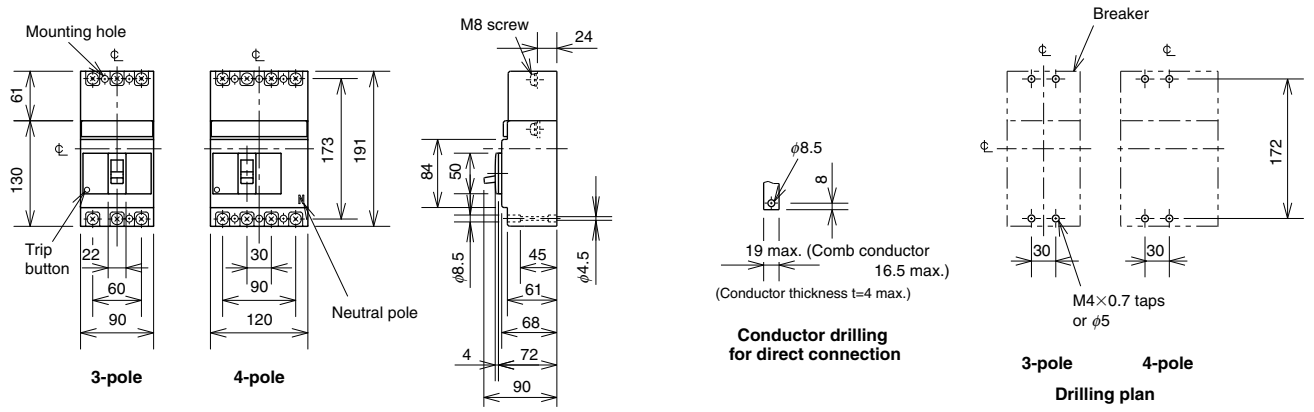

Rear connection

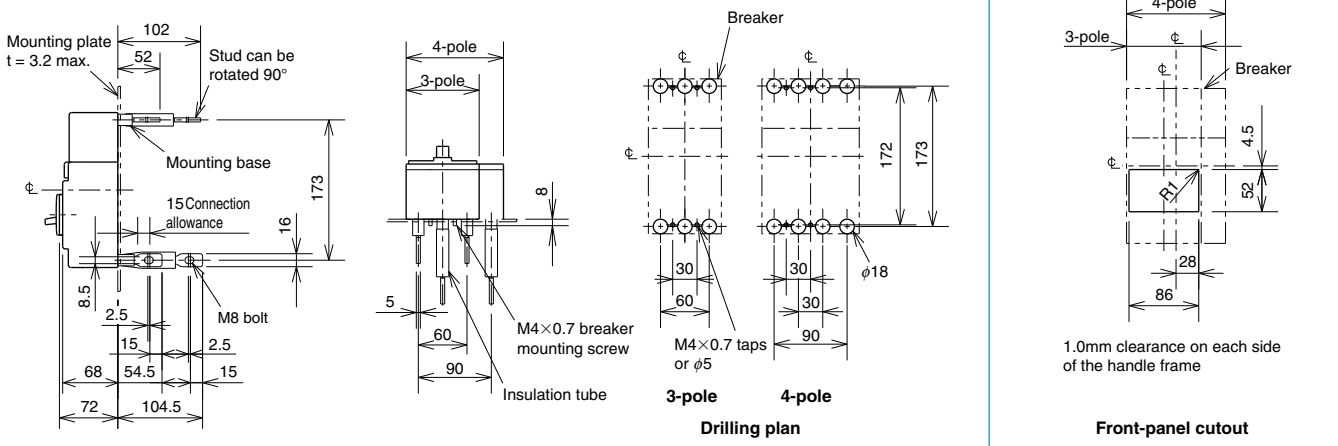

Plug-in

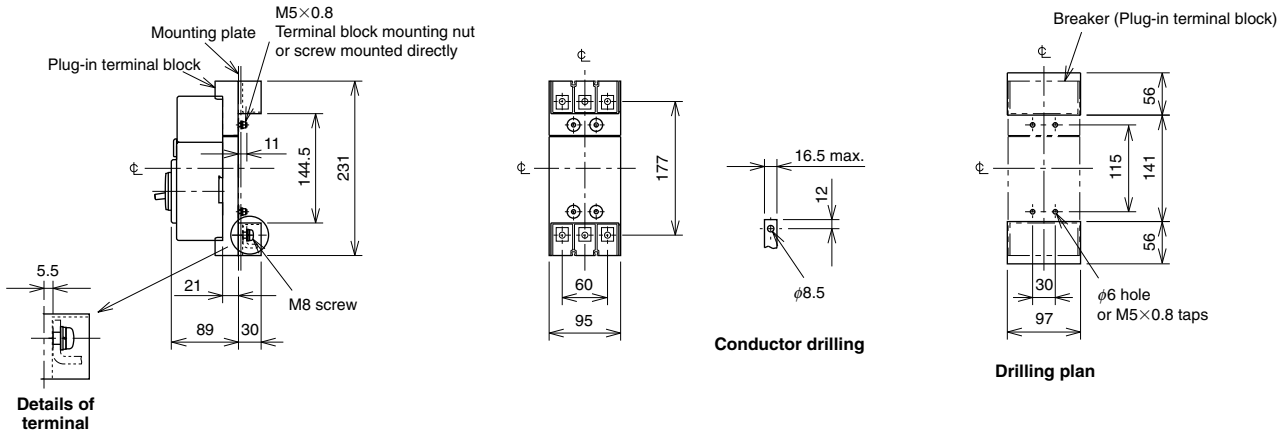

Remark: 1. 2-pole models are 3-pole models with the central pole removed.

NF250-CV
NF250-SV
NF250-HV

NF250-SV

Model				NF250-CV		NF250-SV			NF250-HV		
Rated current In (A)				(*1) (100) 125 150 175 200 225 250		(*1) (100) 125 150 160 175 200 225 250			125 150 160 175 200 225 250		
Number of poles				2	3	2	3	4	2	3	4
Rated insulation voltage Ui (V)				600		690			690		
Rated short-circuit breaking capacity (kA)	IEC 60947-2 (Icu/Ics)	AC	690V	–		8/8			10/8		
			500V	10/8		30/30			50/38		
			440V	15/12		36/36			65/65		
			415V	25/19		36/36			70/70		
			400V	25/19		36/36			75/75		
			380V	25/19		36/36			75/75		
			230V	36/27		85/85			100/100		
		DC (*1)	250V	15/12		20/20 (300V)			40/40 (300V)		
Standard attached parts (front connection)				Mounting screw: M4×0.7×55 (2 and 3P: 2pcs, 4P: 4pcs) Insulation barrier: (2P: 2pcs, 3P: 4pcs, 4P: 6pcs)							

Note *1 Use two poles for three- and four-pole products. In this case, do not use the neutral pole of the four-pole products. If wired as shown at the bottom of page 14, three-pole NF250-CV can be used for up to 400VDC, three-pole NF250-SV and NF250-HV up to 500VDC and four-pole products up to 600VDC.

Operating Characteristics

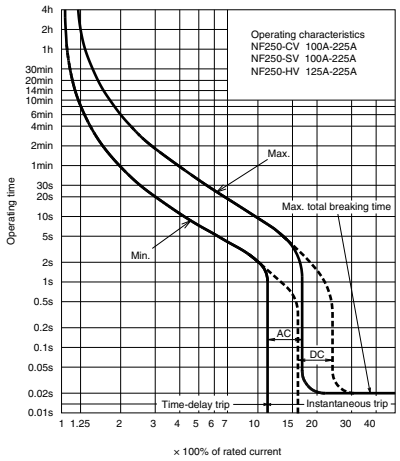

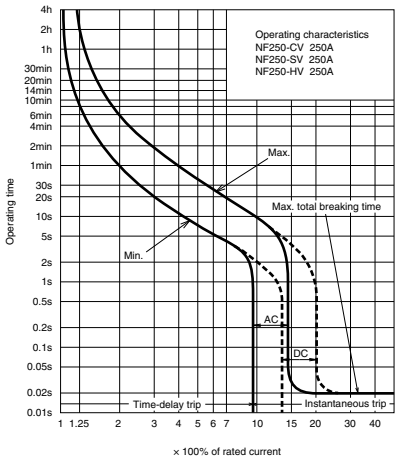

Internal Accessories

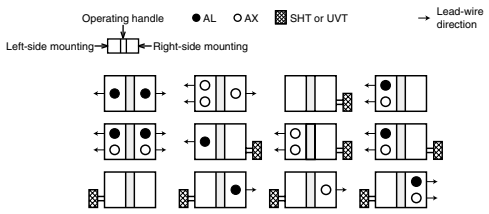

Temperature Compensation Curve

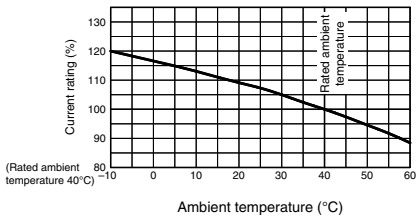

External Accessories

Accessories		Type name	Reference page
Operating handle	F	F-2SV	117
	V	V-2SV	119
Handle lock device	LC	LC-05SV	127
	HL(*1)	HLF-05SV	
		HLN-05SV	
	HL-S	HLS-2SV	

Notes *1 HLF types are used for OFF lock and HLN types for ON lock.
*2 Specify the working voltage. Refer to the reference page for type name.

Accessories				Type name	Reference page
Mechanical interlock		MI	2, 3P	MI-05SV3	129
			4P	MI-2SV4	
Terminal cover	Small	TC-S	2, 3P	TCS-2SV3	121
	Large	TC-L	2, 3P	TCL-2SV3	
				TCL-2SV3L	
			4P	TCL-2SV4	
	Skeleton	TTC	2, 3P	TTC-2SV3	
	Rear	BTC	2, 3P	BTC-2SV3	
	Plug-in	PTC	2, 3P	PTC-2SV3	
Electrical operation device				(*2)	133

Outline Drawing

Front connection

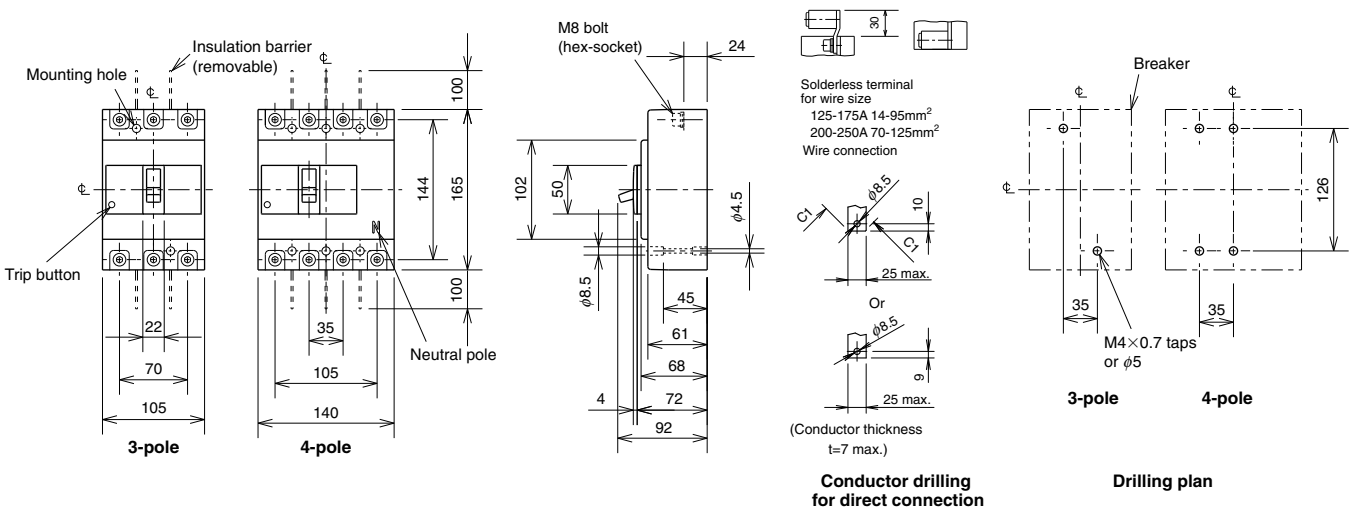

Rear connection

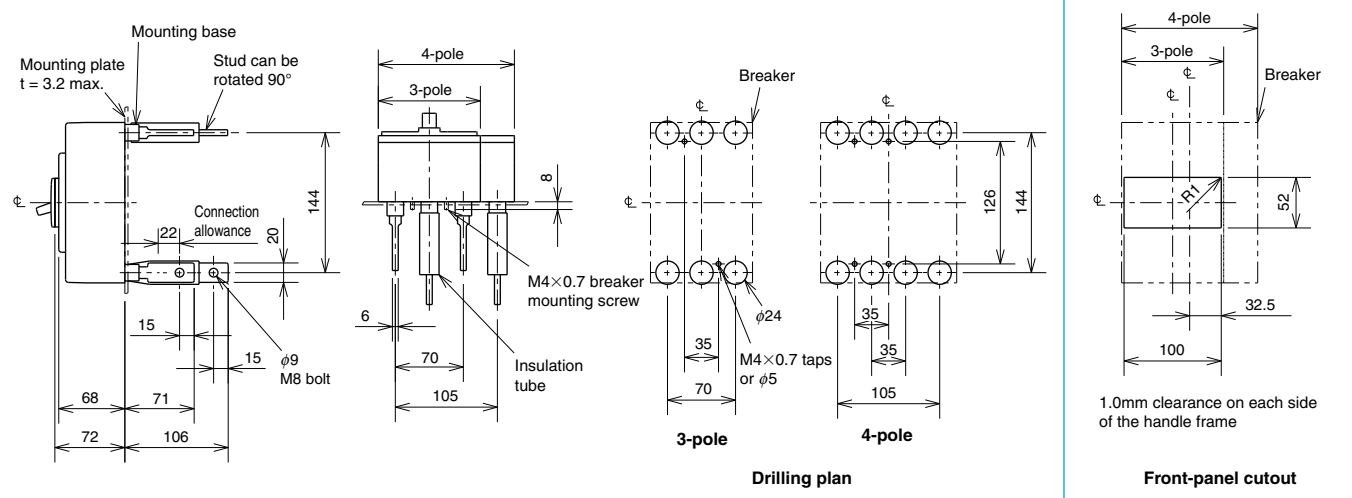

Plug-in

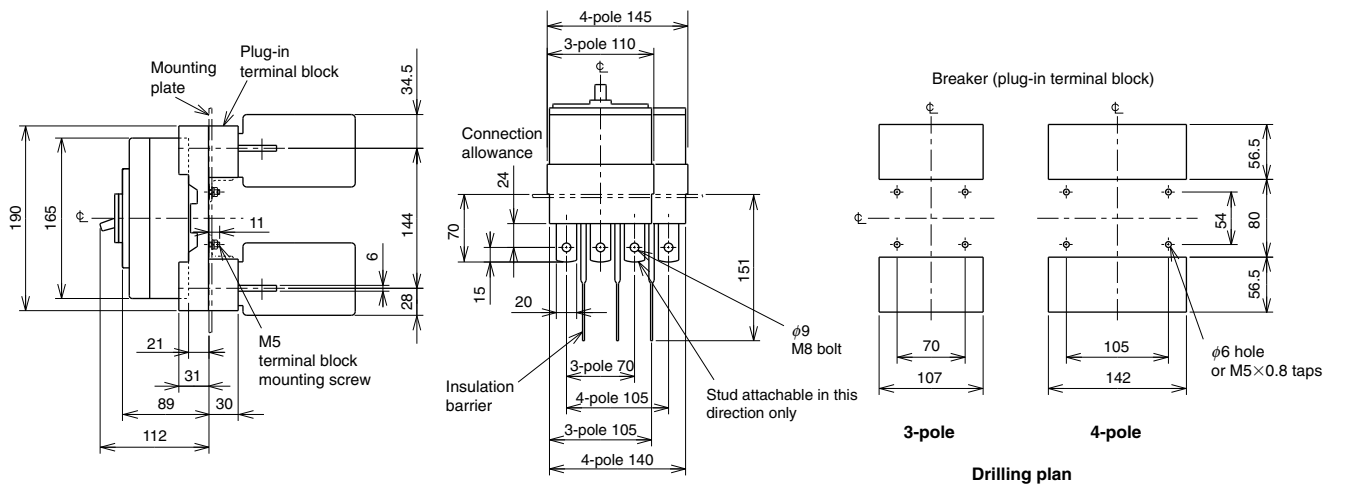

Remarks: 1. 2-pole models are 3-pole models with the central pole removed.
2. Only 2-pole and 3-pole models are available for NF250-CV.

NF250-SXV
NF250-LXV
NF250-HXV

NF250-SXV

Model				NF250-SXV			NF250-LXV			NF250-HXV		
Rated current In (A)				(100) 125 150 175 200 225 250			(100) 125 150 175 200 225 250			(100) 125 150 175 200 225 250		
Number of poles				2	3	4	2	3	4	2	3	4
Rated insulation voltage Ui (V)				690			690			690		
Rated short-circuit breaking capacity (kA)	JIS C 8201-2-1 Ann.1 IEC 60947-2 EN 60947-2 (Icu/Ics)	AC	690V	8/8			8/8			10/8		
			500V	30/30			36/36			50/38		
			440V	36/36			50/50			65/65		
			415V	36/36			50/50			70/70		
			400V	36/36			50/50			75/75		
			380V	36/36			50/50			75/75		
			230V	85/85			90/90			100/100		
			200V	85/85			90/90			100/100		
		DC	300V	20/20 (*1)			20/20 (*1)			40/40 (*1)		
Standard attached parts (front connection)				Mounting screw: M4×0.7×55 (2 and 3P: 2pcs, 4P: 4pcs) Insulation barrier: (2P: 2pcs, 3P: 4pcs, 4P: 6pcs)								

Notes *1 When wired as shown at the bottom of page 14, three-pole models can be used for up to 500VDC, and four-pole models for up to 600VDC.

Operating Characteristics

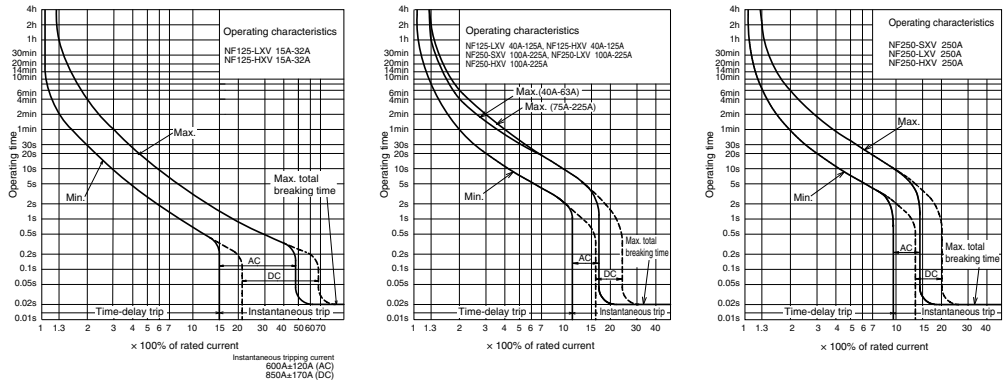

Internal Accessories

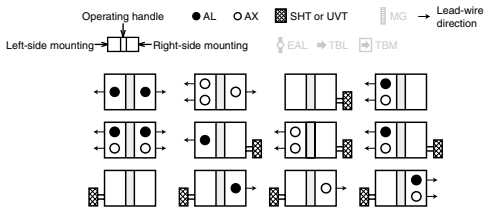

Temperature Compensation Curve

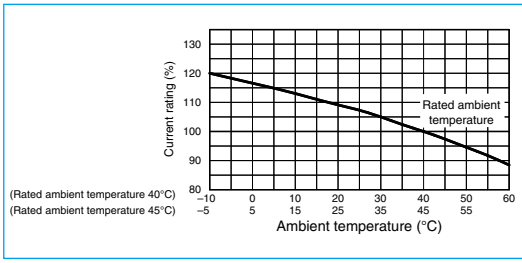

External Accessories

Accessories		Type name	Reference page
Operating handle	F	F-2SV	119
	V	V-2SV	121
Lock cover	LC	LC-05SV	129
Handle lock device	HL (*1)	HLF-05SV	
		HLN-05SV	
	HL-S	HLS-2SV	

Notes *1 HLF types are used for OFF lock and HLN types for ON lock.
*2 Specify the working voltage. Refer to the reference page for type name.

Accessories				Type name	Reference page
Mechanical interlock		MI	2, 3P	MI-05SV3	131
			4P	MI-2SV4	
Terminal cover	Small	TC-S	2, 3P	TCS-2SV3	123
	Large	TC-L	2, 3P	TCL-2SV3	
				TCL-2SV3L	
			4P	TCL-2SV4	
	Skeleton	TTC	2, 3P	TTC-2SV3	
	Rear	BTC	2, 3P	BTC-2SV3	
	Plug-in	PTC	2, 3P	PTC-2SV3	
Electrical operation device				(*2)	135

Outline Drawing

Front connection

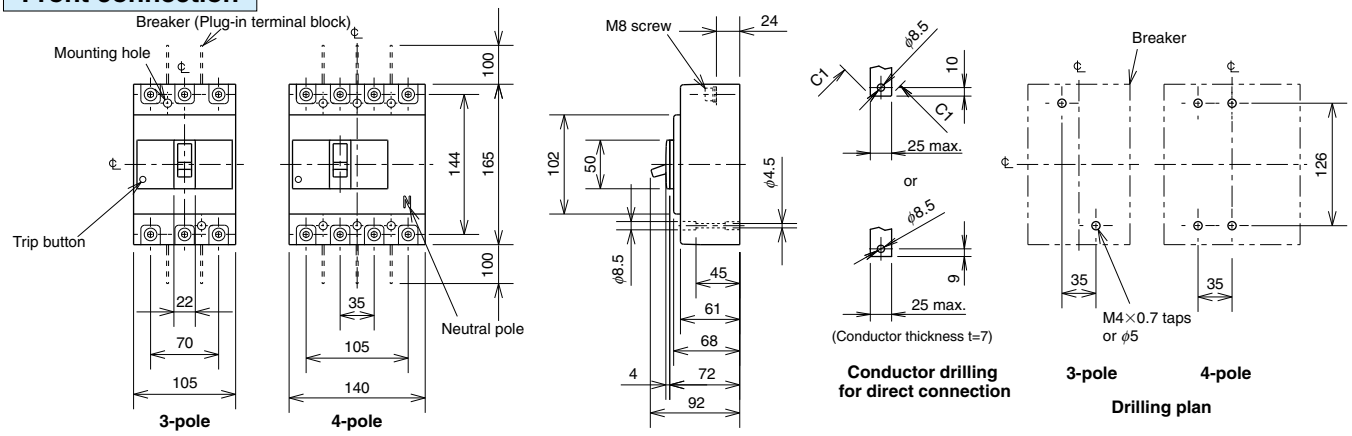

Rear connection

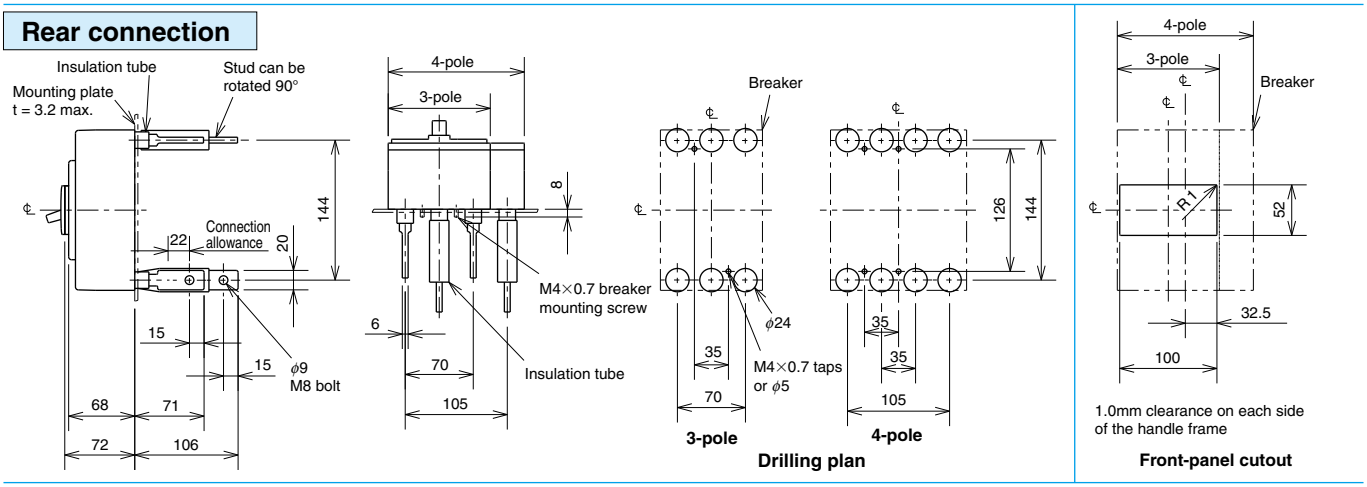

Plug-in

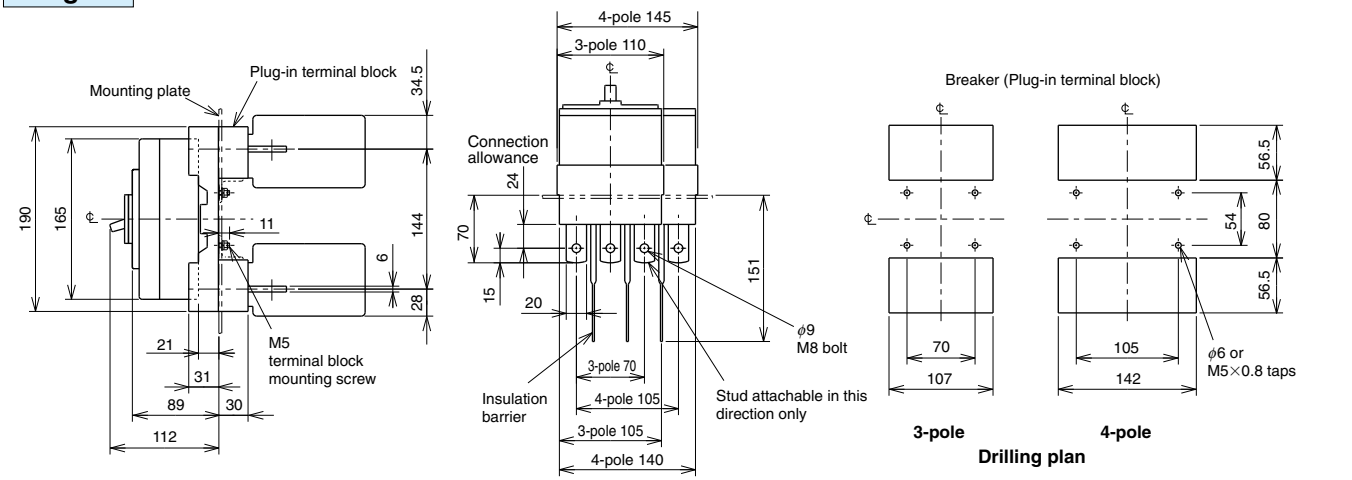

Remark: 1. 2-pole models are 3-pole models with the central pole removed.

NF250-UV

NF250-UV

Model				NF250-UV		
Rated current In (A)				125 150 175 200 225 250		
Number of poles				2	3	4
Rated insulation voltage Ui (V)				690		
Rated short-circuit breaking capacity (kA)	IEC 60947-2 (Icu/Ics)	AC	690V	15/15		
			500V	200/200		
			440V	200/200		
			415V	200/200		
			400V	200/200		
			380V	200/200		
			230V	200/200		
		DC	250V	–		
Standard attached parts (front connection)				Mounting screw: M4×0.7×55 (2 and 3P: 2pcs, 4P: 4pcs) Mounting screw: M4×0.7×73 (2 and 3P: 2pcs) Insulation barrier: (2P: 2pcs, 3P: 4pcs, 4P: 6pcs)		

Operating Characteristics

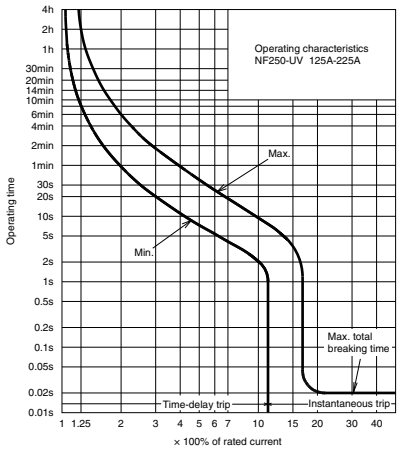

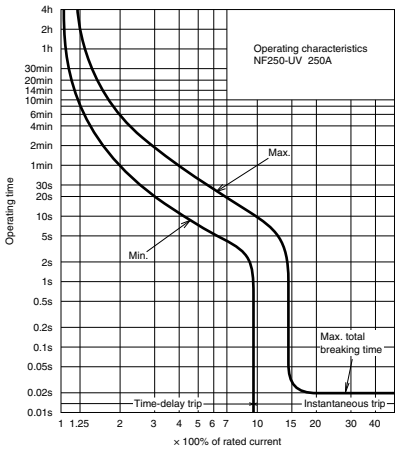

Internal Accessories

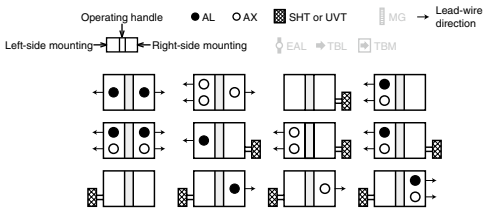

Temperature Compensation Curve

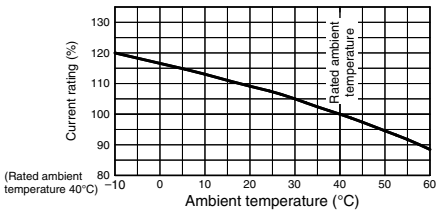

External Accessories

Accessories		Type name	Reference page
Operating handle	F	F-2UV	117
	V	V-2UV	119
Handle lock device	LC	LC-05SV	127
	HL(*1)	HLF-05SV	
		HLN-05SV	
	HL-S	HLS-2SV	

Notes *1 HLF types are used for OFF lock and HLN types for ON lock.
*2 Specify the working voltage. Refer to the reference page for type name.

Accessories				Type name	Reference page
Mechanical interlock		MI	2, 3P	MI-05SV3	129
			4P	MI-2SV4	
Terminal cover	Small	TC-S	2, 3P	TCS-2SV3	121
	Large	TC-L	2, 3P	TCL-2SV3	
				TCL-2SV3L	
			4P	TCL-2SV4	
	Skeleton	TTC	2, 3P	TTC-2SV3	
	Rear	BTC	2, 3P	BTC-2SV3	
	Plug-in	PTC	2, 3P	PTC-2SV3	
Electrical operation device				(*2)	133

Outline Drawing

Front connection

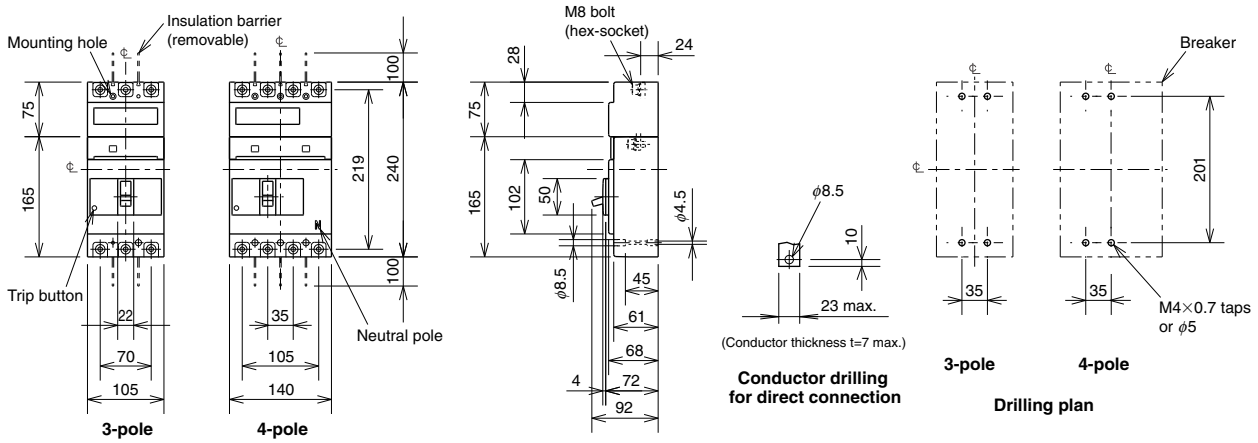

Rear connection

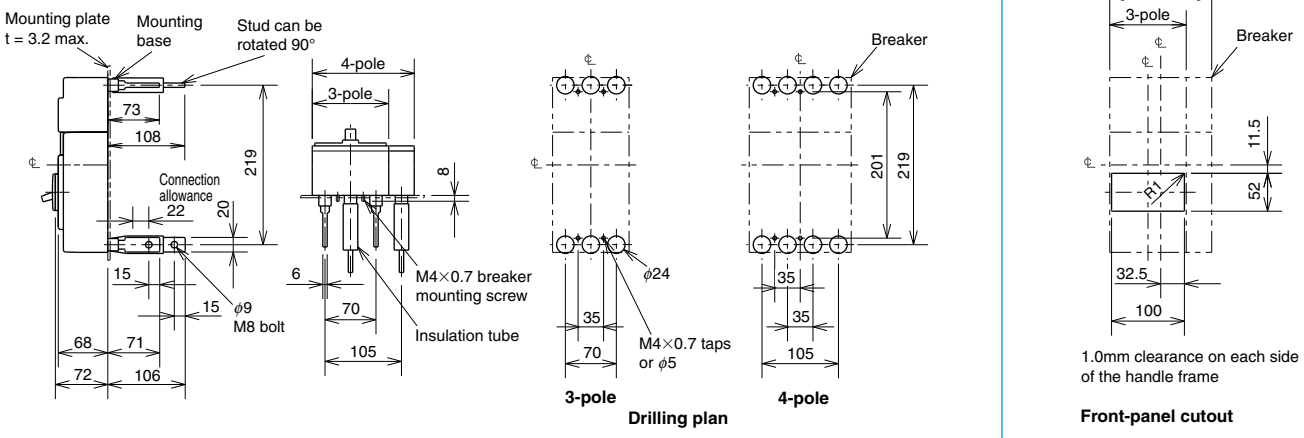

Plug-in

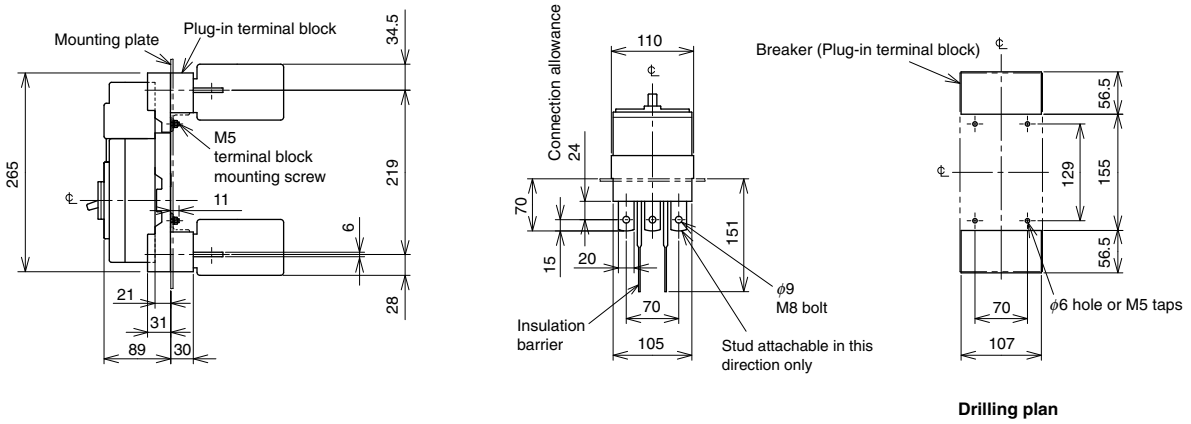

Remark: 1. 2-pole models are 3-pole models with the central pole removed.

NF125-SGV NF160-SGV NF250-SGV NF125-LGV NF160-LGV NF250-LGV NF125-HGV NF160-HGV NF250-HGV NF125-RGV NF250-RGV

NF250-SGV

Model				NF125-SGV	NF160-SGV	NF250-SGV	NF125-LGV	NF160-LGV	NF250-LGV
Rated current In (A)				16-20, 20-25, 25-32 32-40, 35-40-50 45-50-63, 56-63-80 70-80-100 90-100-125	125-160	125-160 140-160-200 175-200-250	16-20, 20-25, 25-32 32-40, 35-40-50 45-50-63, 56-63-80 70-80-100 90-100-125	125-160	125-160 140-160-200 175-200-250
Number of poles				2 3 4	2 3 4	2 3 4	2 3 4	2 3 4	2 3 4
Rated insulation voltage Ui (V)				690	690	690	690	690	690
Rated short-circuit breaking capacity (kA)	IEC 60947-2 (Icu/Ics)	AC	690V	8/8	8/8	8/8	8/8	8/8	8/8
			500V	30/30	30/30	30/30	36/36	36/36	36/36
			440V	36/36	36/36	36/36	50/50	50/50	50/50
			415V	36/36	36/36	36/36	50/50	50/50	50/50
			400V	36/36	36/36	36/36	50/50	50/50	50/50
			380V	36/36	36/36	36/36	50/50	50/50	50/50
			230V	85/85	85/85	85/85	90/90	90/90	90/90
			200V	85/85	85/85	85/85	90/90	90/90	90/90
		DC (*1)	300V	20/20	20/20	20/20	20/20	20/20	20/20
Standard attached parts (front connection)				Mounting screw: M4×0.7×55 (2 and 3P: 2pcs, 4P: 4pcs) Insulation barrier: (2P: 2pcs, 3P: 4pcs, 4P: 6pcs)					

Model				NF125-HGV	NF160-HGV	NF250-HGV	NF125-RGV	NF250-RGV
Rated current In (A)				16-20, 20-25, 25-32 32-40, 35-40-50 45-50-63, 56-63-80 70-80-100, 90-100-125	125-160	125-160 140-160-200 175-200-250	16-20, 20-25, 25-32 32-40, 40-50, 50-63 63-80, 80-100, 100-125	125-160 160-200 200-250
Number of poles				2 3 4	2 3 4	2 3 4	2 3	2 3
Rated insulation voltage Ui (V)				690	690	690	690	690
Rated short-circuit breaking capacity (kA)	IEC 60947-2 (Icu/Ics)	AC	690V	10/8	10/8	10/8	–	–
			500V	50/38	50/38	50/38	–	–
			440V	65/65	65/65	65/65	125/125	125/125
			415V	70/70	70/70	70/70	150/150	150/150
			400V	75/75	75/75	75/75	150/150	150/150
			380V	75/75	75/75	75/75	150/150	150/150
			230V	100/100	100/100	100/100	150/150	150/150
			200V	100/100	100/100	100/100	150/150	150/150
		DC (*1)	300V	40/40	40/40	40/40	–	–
Standard attached parts (front connection)				Mounting screw: M4×0.7×55 (2 and 3P: 2pcs, 4P: 4pcs) Insulation barrier: (2P: 2pcs, 3P: 4pcs, 4P: 6pcs)				

Note *1 When wired as shown at the bottom of page 14, three-pole models can be used for up to 500VDC, and four-pole models for up to 600VDC.

Operating Characteristics

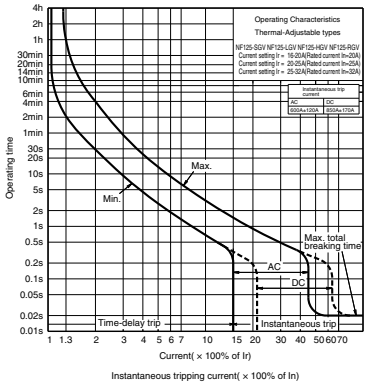

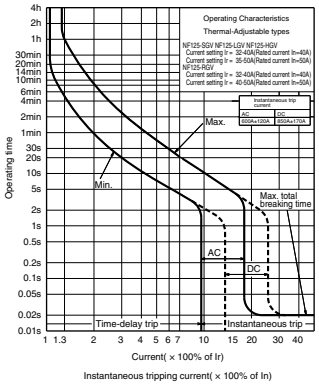

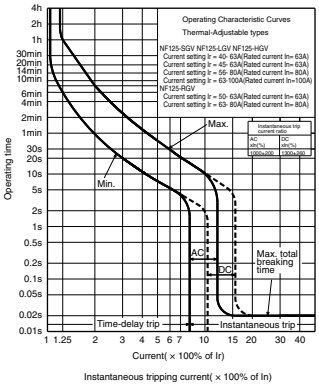

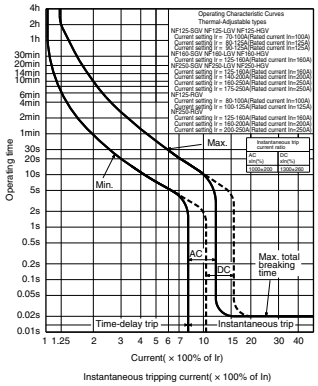

Internal Accessories

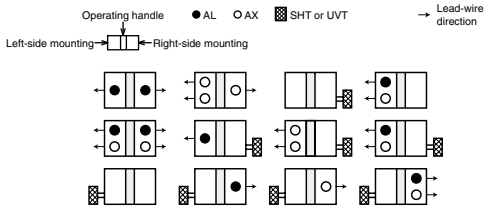

Temperature Compensation Curve

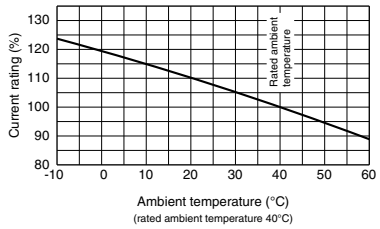

External Accessories

Accessories		Type name	Reference page
Operating handle	F	F-2SV	117
	V	V-2SV	119
Handle lock device	LC	LC-05SV	127
	HL(*1)	HLF-05SV	
		HLN-05SV	
	HL-S	HLS-2SV	

Notes *1 HLF types are used for OFF lock and HLN types for ON lock.
*2 Specify the working voltage. Refer to the reference page for type name.

Accessories				Type name	Reference page
Mechanical interlock		MI	2, 3P	MI-05SV3	129
			4P	MI-2SV4	
Terminal cover	Small	TC-S	2, 3P	TCS-2SV3	121
	Large	TC-L	2, 3P	TCL-2SV3	
				TCL-2SV3L	
			4P	TCL-2SV4	
	Skeleton	TTC	2, 3P	TTC-2SV3	
	Rear	BTC	2, 3P	BTC-2SV3	
	Plug-in	PTC	2, 3P	PTC-2SV3	
Electrical operation device				(*2)	133

Outline Drawing

Front connection

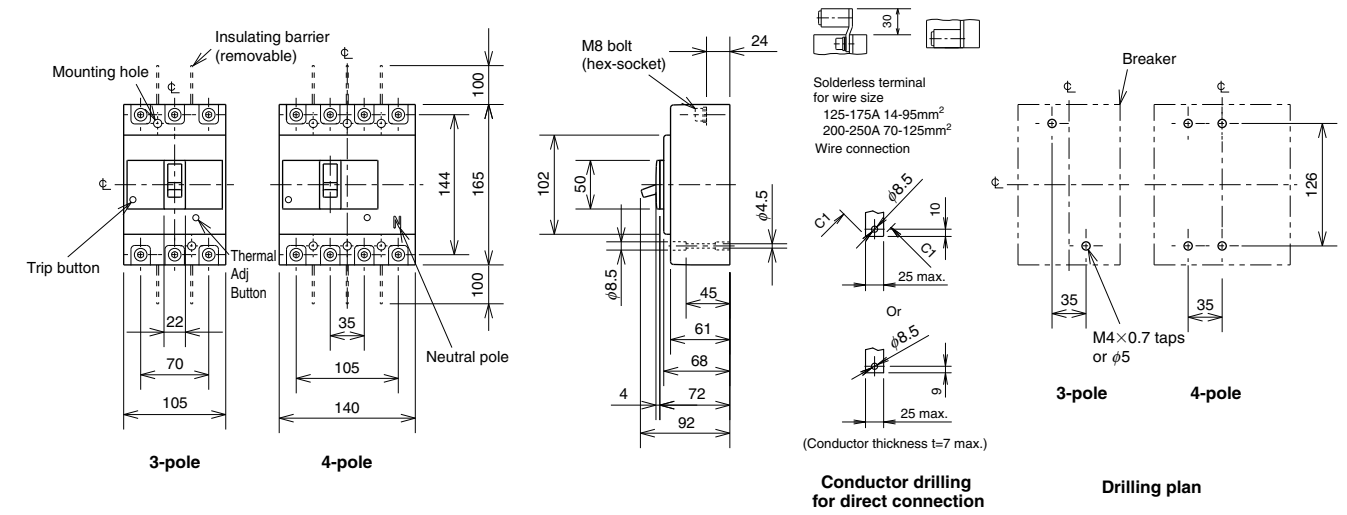

Rear connection

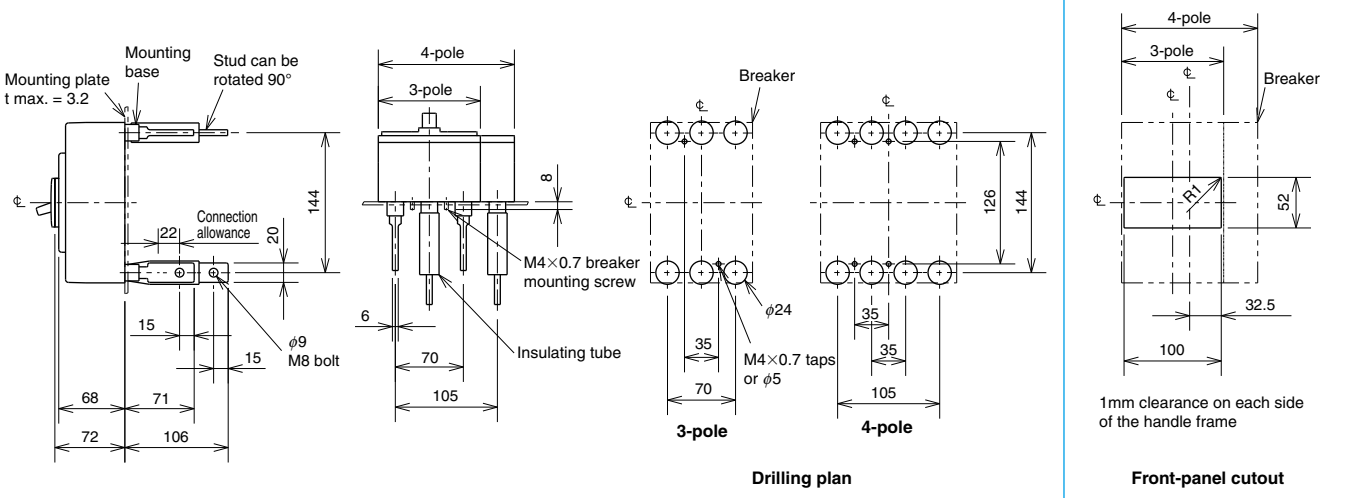

Plug-in

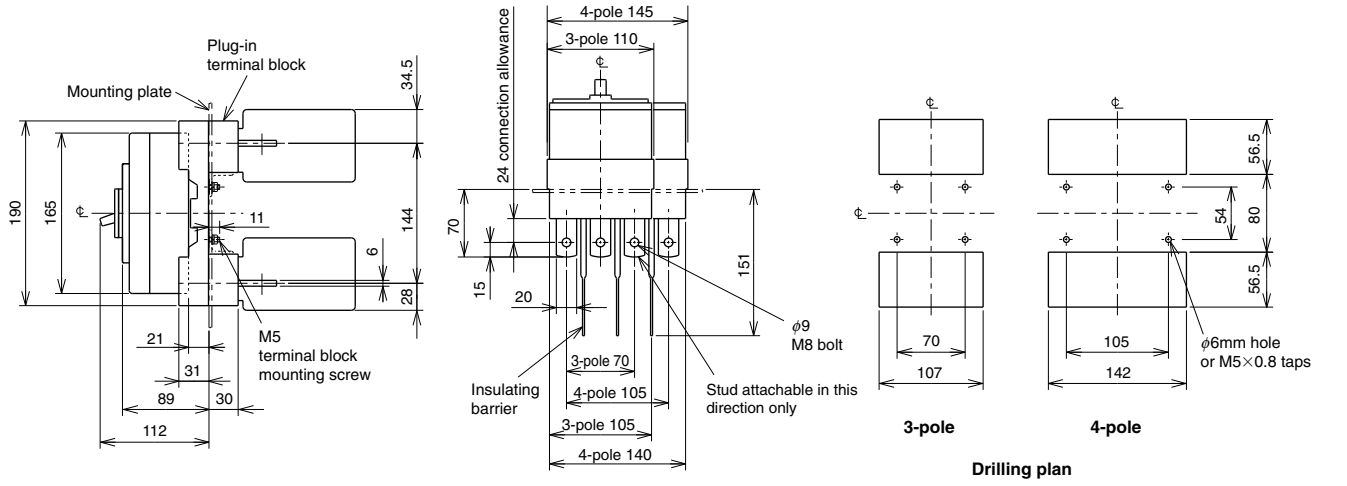

Remark: 1. 2-pole models are 3-pole models with the central pole removed.

NF125-SEV
NF125-HEV
NF250-SEV
NF250-HEV

NF125-SEV

Model				NF125-SEV		NF125-HEV		NF250-SEV		NF250-HEV	
Rated current In (A)				32 63 125		32 63 125		160 250		160 250	
Current setting Ir (A)				16-32 32-63 63-125		16-32 32-63 63-125		80-160 125-250		80-160 125-250	
Number of poles				3	4	3	4	3	4	3	4
Rated insulation voltage Ui (V)				690		690		690		690	
Rated short-circuit breaking capacity (kA)	IEC 60947-2 (Icu/Ics)	AC	690V	8/8		10/8		8/8		10/8	
			500V	30/30		50/38		30/30		50/38	
			440V	36/36		65/65		36/36		65/65	
			415V	36/36		70/70		36/36		70/70	
			400V	36/36		75/75		36/36		75/75	
			380V	36/36		75/75		36/36		75/75	
			230V	85/85		100/100		85/85		100/100	
		DC	250V	–		–		–		–	
Standard attached parts (front connection)				Mounting screw: M4×0.7×55 (3P: 2pcs, 4P: 4pcs) Insulation barrier: (3P: 4pcs, 4P: 6pcs)							

Operating Characteristics

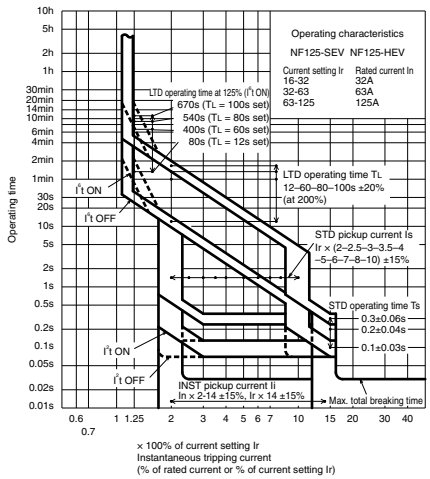

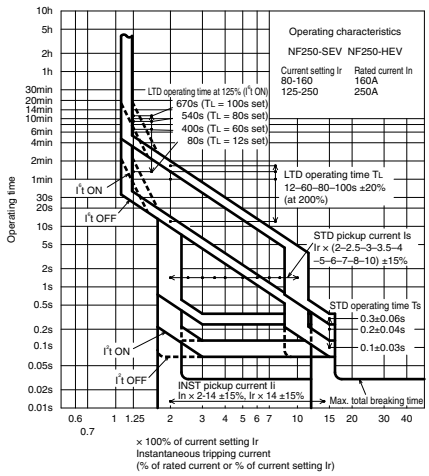

Internal Accessories

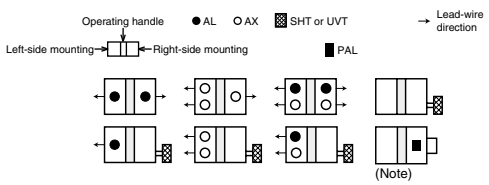

Current Reducing Curve

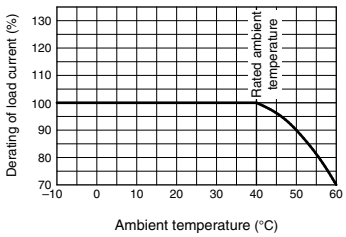

The rated current does not have thermal characteristics. Reduce the current as shown in the curve on the left chart if the ambient temperature exceeds 40 °C.

External Accessories

Accessories		Type name	Reference page
Operating handle	F	F-2SV	117
	V	V-2SV	119
Handle lock device	LC	LC-05SV	127
	HL(*1)	HLF-05SV	
		HLN-05SV	
	HL-S	HLS-2SV	

Notes *1 HLF types are used for OFF lock and HLN types for ON lock.
*2 Specify the working voltage. Refer to the reference page for type name.

Accessories				Type name	Reference page
Mechanical interlock		MI	3P	MI-05SV3	129
			4P	MI-2SV4	
Terminal cover	Small	TC-S	3P	TCS-2SV3	121
	Large	TC-L	3P	TCL-2SV3	
				TCL-2SV3L	
			4P	TCL-2SV4	
	Skeleton	TTC	3P	TTC-2SV3	
	Rear	BTC	3P	BTC-2SV3	
	Plug-in	PTC	3P	PTC-2SV3	
Electrical operation device				(*2)	133

Outline Drawing

Front connection

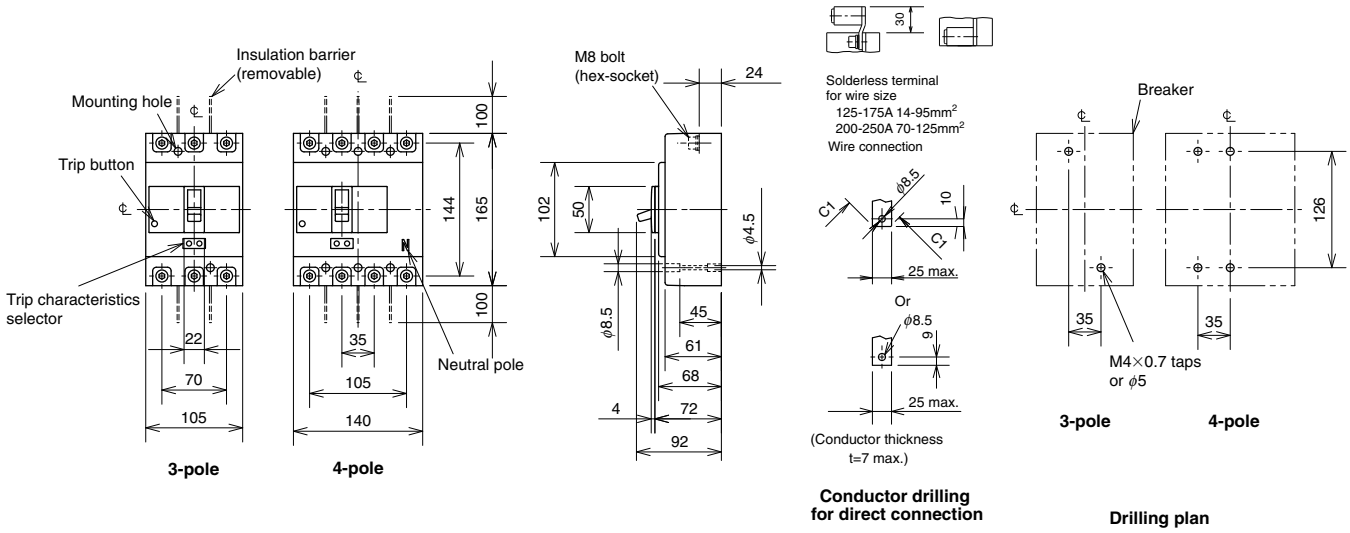

Rear connection

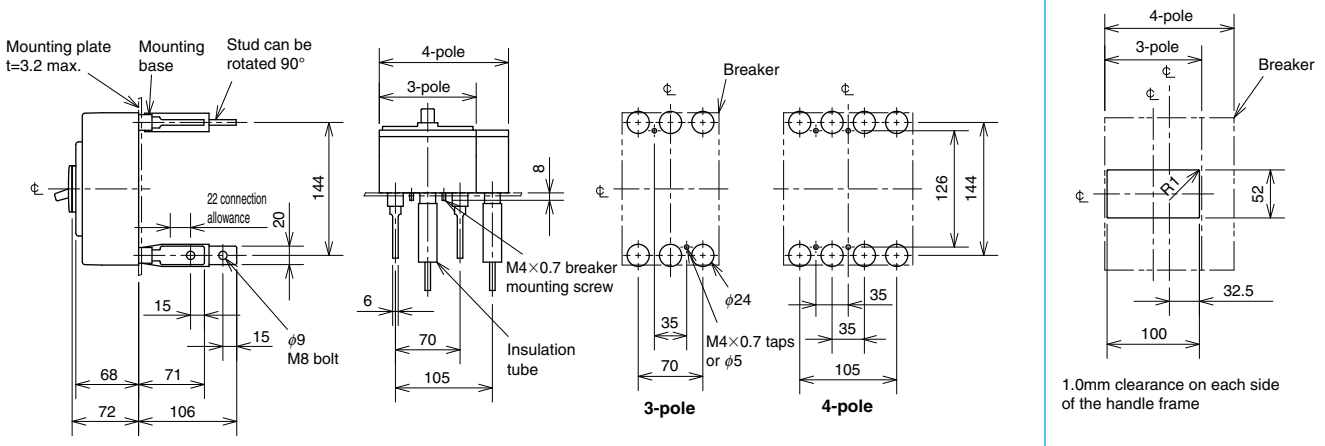

Plug-in

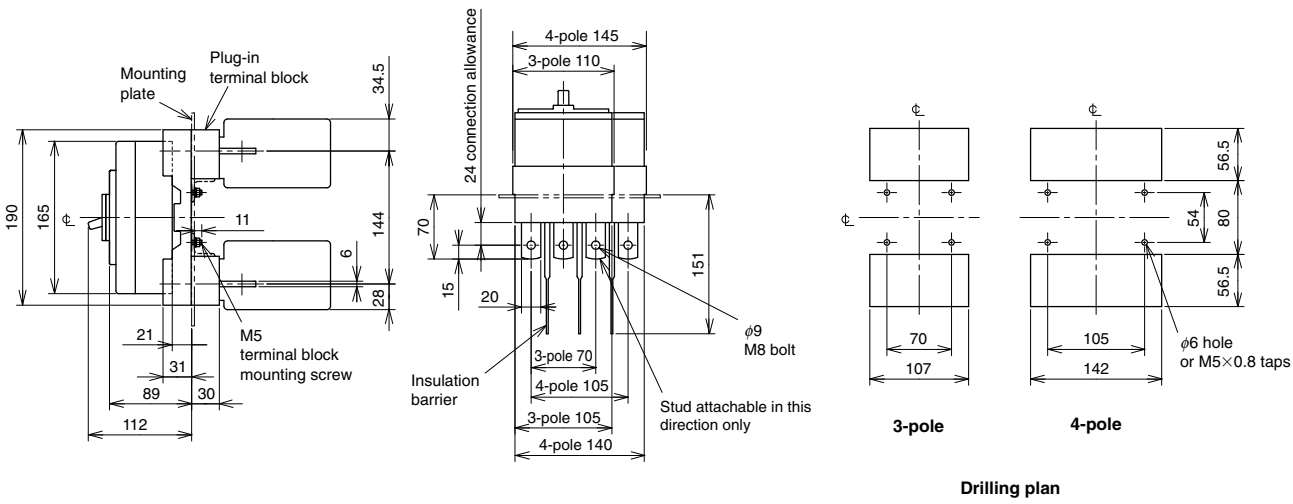

NF400-CW
NF400-SW

NF400-SW

Model				NF400-CW		NF400-SW		
Rated current In (A)				250 300		350 400		
Number of poles				2	3	2	3	4
Rated insulation voltage Ui (V)				690		690		
Rated short-circuit breaking capacity (kA)	IEC 60947-2 (Icu/Ics)	AC	690V	–		10/10		
			500V	15/8		30/30		
			440V	25/13		42/42		
			400V	36/18		45/45		
			230V	50/25		85/85		
		DC (*1)	250V	20/10		40/40		
Standard attached parts			Front connection	Mounting screw: M6×60 (4pcs) Insulating barrier: (2P: 2pcs, 3P: 4pcs, 4P: 6pcs)				
			Rear connection	Mounting screw: M6×72 (4pcs)				

Note *1 When wired as shown at the bottom of page 14, 3-pole models can be used for up to 400VDC, and 4-pole models for up to 500VDC.

Operating Characteristics

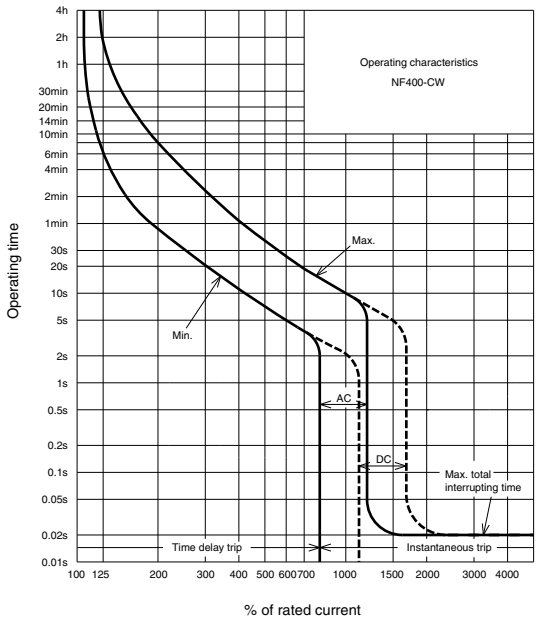

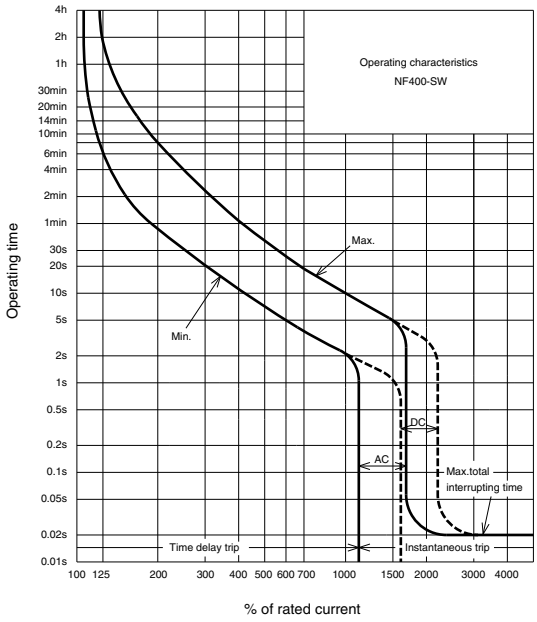

Internal Accessories

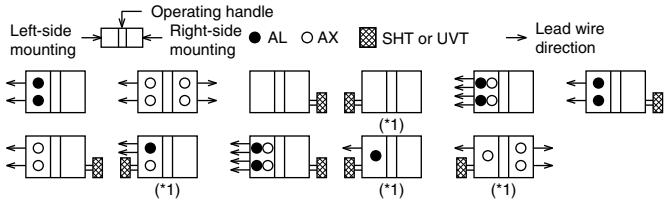

Note *1 Right-side mounting is standard of SHT and UVT. Specify separately for left-side mounting.
Remark: 1. Refer to page 104.

Temperature Compensation Curve

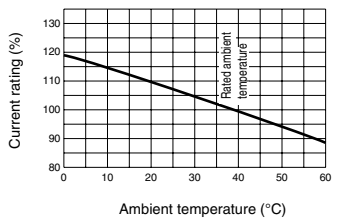

External Accessories

Accessories			Type name	Reference page
Operating handle	F		F-4S	117
	V		V-4S	119
Mechanical interlock	MI	2, 3P	MI-4SW3	129
		4P	MI-4SW4	
Auxiliary handle	HT		HT-4CW, HT-4SW	128

Note *1 Specify the operation method and voltage. Order in combination with the breaker unit.

Accessories				Type name	Reference page
Terminal cover	Large	TC-L	2, 3P	TCL-4SW3	121
			4P	TCL-4SW4	
	Skeleton	TTC	2, 3P	TTC-4SW3	
			4P	TTC-4SW4	
	Rear	BTC	2, 3P	BTC-4SW3	
			4P	BTC-4SW4	
Handle lock device		HL		HL-4CW, HL-4SW	127
		HL-S		HLS-4SW	
Electrical operation device		NFM	3P	(*1)	133
			4P		

Outline Drawing

Front connection

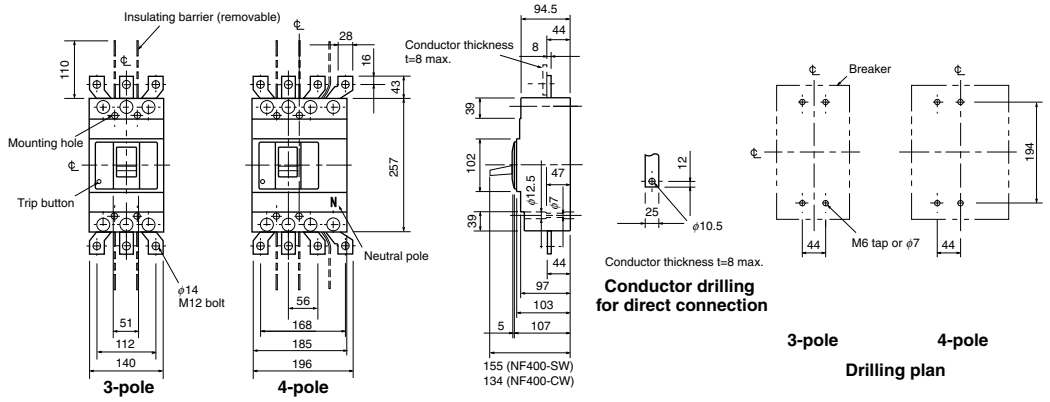

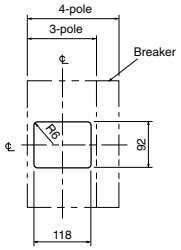

1.0mm clearance on each side of the handle frame.

Front-panel cutout

Rear connection

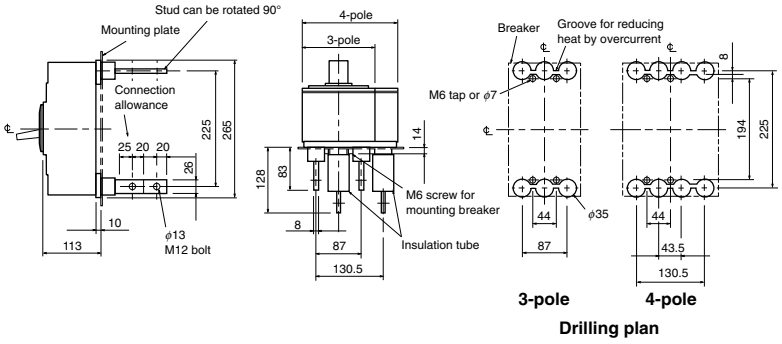

Boring dimensions for rear connection type barriers (3-pole)

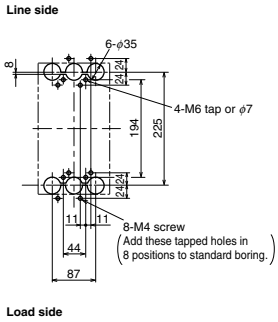

Note The bore dimensional drawing shows the breaker viewed from the rear.

Plug-in

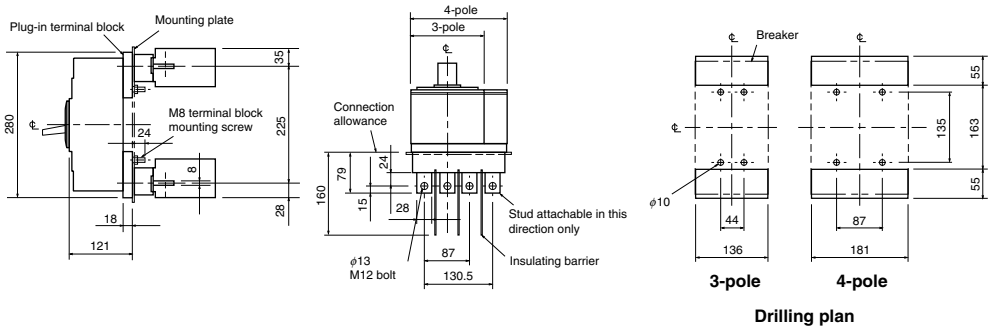

Remark: 1. 2-pole models are 3-pole models with the central pole removed.

NF400-SEW
NF400-HEW
NF400-REW

NF400-SEW

Model				NF400-SEW		NF400-HEW		NF400-REW
Rated current In (A)				200-400 adjustable				
Number of poles				3	4	3	4	3
Rated insulation voltage Ui (V)				690		690		690
Rated short-circuit breaking capacity (kA)	IEC 60947-2 (Icu/Ics)	AC	690V	10/10		35/18		–
			500V	30/30		50/50		70/35
			440V	42/42		65/65		125/63
			400V	50/50		70/70		125/63
			230V	85/85		100/100		150/75
Standard attached parts			Front connection	Mounting screw: M6×72 (4pcs) Insulating barrier: (3P: 4pcs, 4P: 6pcs)				
			Rear connection	Mounting screw: M6×85 (4pcs)				

Operating Characteristics

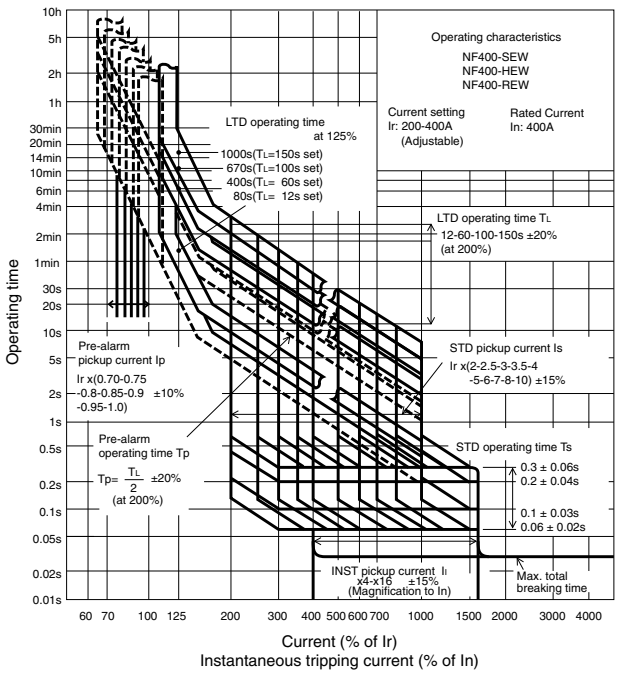

Internal Accessories

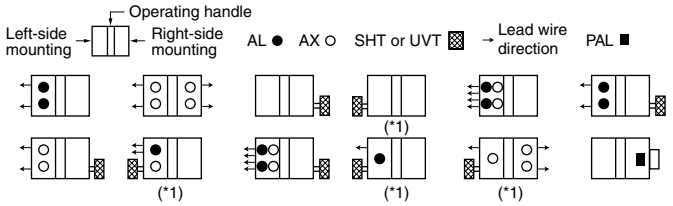

Note *1 Right-side mounting is standard of SHT and UVT. Specify separately for left-side mounting.
Remark: 1. Refer to page 104.

Current Reducing Curve

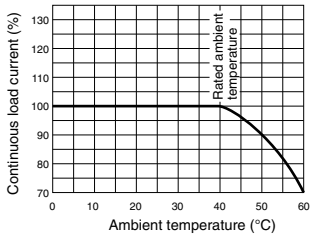

External Accessories

Accessories			Type name	Reference page
Operating handle	F		F-4S	117
	V		V-4S	119
Mechanical interlock	MI	3P	MI-4SW3	129
		4P	MI-4SW4	
Auxiliary handle	HT		HT-4SW	128

Accessories				Type name	Reference page
Terminal cover	Large	TC-L	3P	TCL-4SW3 (*2)	121
			4P	TCL-4SW4 (*3)	
	Skeleton	TTC	3P	TTC-4SW3	
			4P	TTC-4SW4	
	Rear	BTC	3P	BTC-4SW3 (*2)	
			4P	BTC-4SW4 (*3)	
Handle lock device		HL		HL-4SW	127
		HL-S		HLS-4SW	
Electrical operation device		NFM	3P	(*1)	133
			4P		

Notes *1 Specify the operation method and voltage. Order in combination with the breaker unit.
*2 This is for NF400-SEW. For rear terminal cover of NF400-HEW/REW, use PTC-4SW3.
*3 This is for NF400-SEW/HEW.

Outline Drawing

Front connection

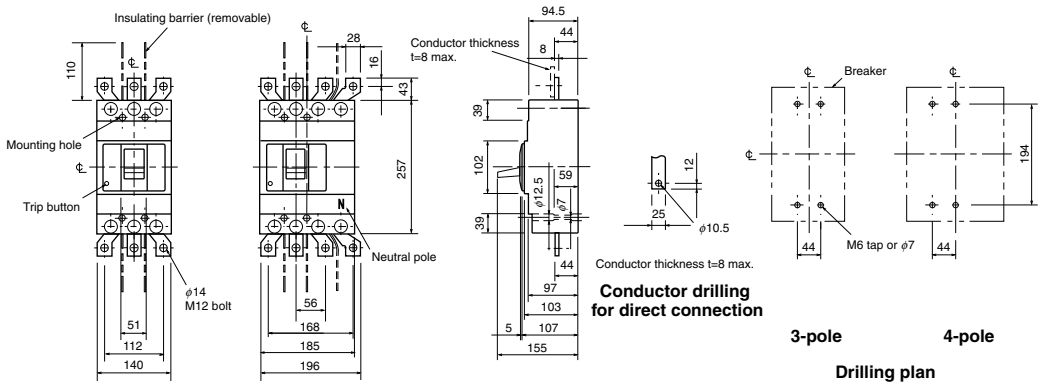

3-pole 4-pole

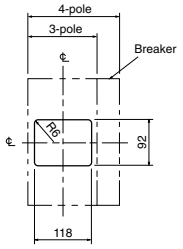

Front-panel cutout

Rear connection

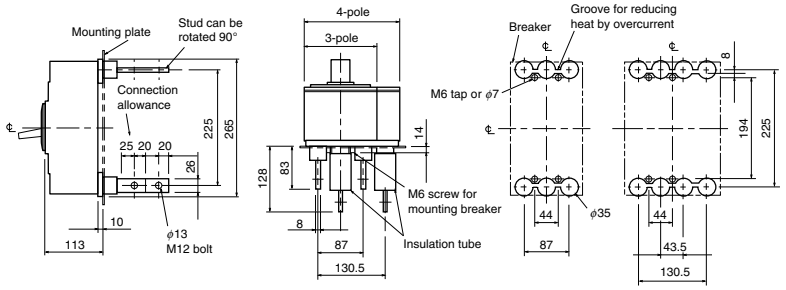

Boring dimensions for rear connection type barriers (3-pole)

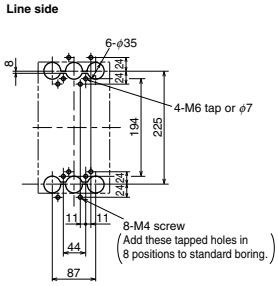

Note The bore dimensional drawing shows the breaker viewed from the rear.

Plug-in

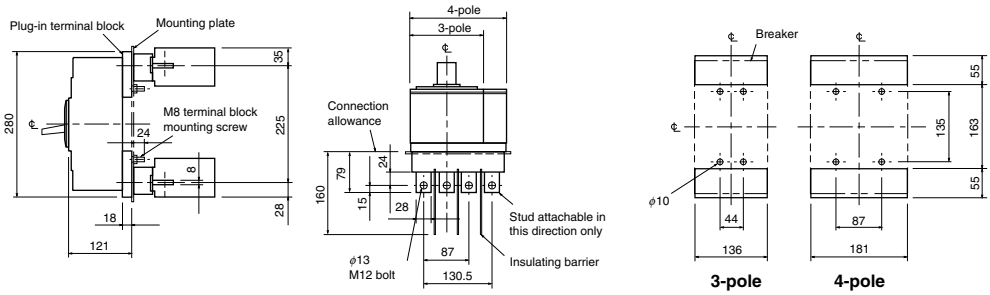

NF400-UEW

NF400-UEW

Model				NF400-UEW	
Rated current In (A)				200-400 adjustable	
Number of poles				3	4
Rated insulation voltage Ui (V)				690	
Rated short-circuit breaking capacity (kA)	IEC 60947-2 (Icu/Ics)	AC	690V	–	
			500V	170/170	
			440V	200/200	
			400V	200/200	
			230V	200/200	
Standard attached parts (4-pole models are provided with auxiliary handle.)			Front connection	Mounting screw: M6×65 (2pcs), M6×174 (2pcs) Insulating barrier: (3P: 4pcs)	
			Rear connection	Mounting screw: M6×72 (2pcs), M6×181 (2pcs)	

Operating Characteristics

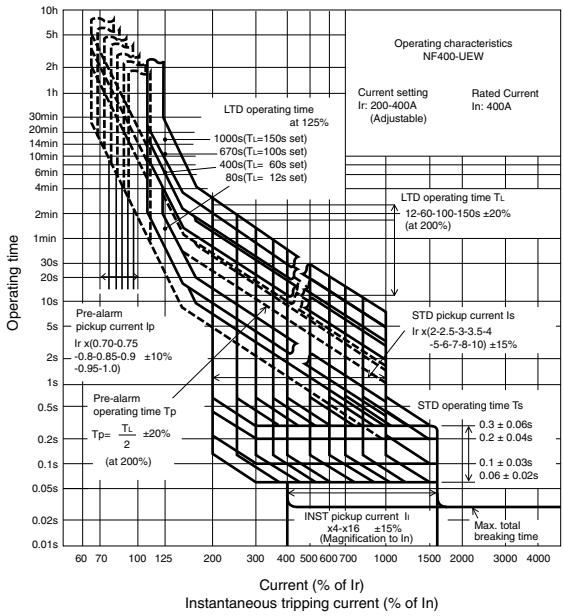

Internal Accessories

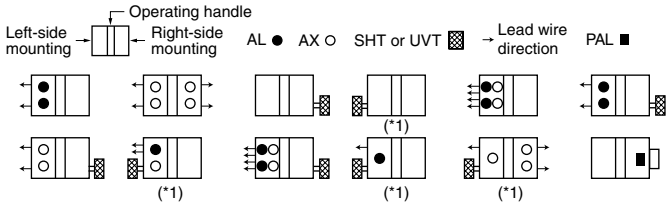

Note *1 Right-side mounting is standard of SHT and UVT. Specify separately for left-side mounting.
Remarks: 1. Specification of 4-pole model is same as that of NF800-UEW.
2. Refer to page 104.

Current Reducing Curve

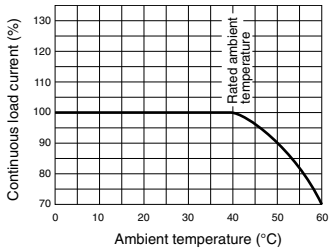

External Accessories

Accessories		Type name	Reference page
Operating handle	F	F-4U	117
	V	V-4U	119
Mechanical interlock	MI	MI-4SW3	129
Auxiliary handle	HT	HT-4SW	128

Accessories				Type name	Reference page
Terminal cover	Large	TC-L	3P	TCL-4SW3	121
	Skeleton	TTC	3P	–	
	Rear	BTC	3P	BTC-4SW3	
Handle lock device		HL		HL-4SW	127
		HL-S		HLS-4UW	
Electrical operation device				(*1)	133

Note *1 Specify the operation method and voltage. Order in combination with the breaker unit.
Remark *1 Specification of 4-pole model is same as that of NF800-UEW.

Outline Drawing

Front connection

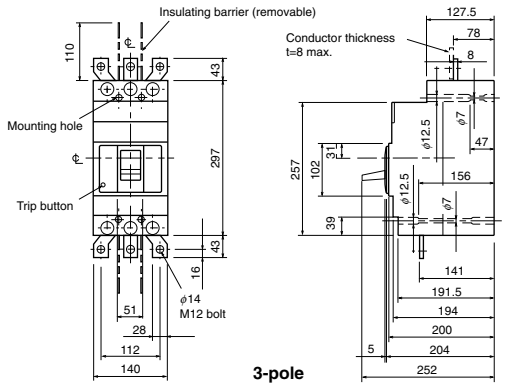

3-pole

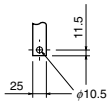

Conductor thickness t=8 max.

Conductor drilling for direct connection

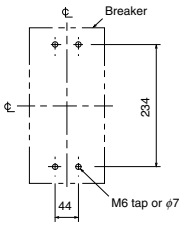

3-pole

Drilling plan

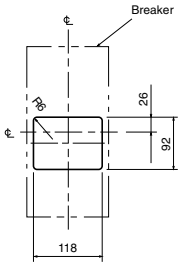

1.0mm clearance on each side of the handle frame.

Front-panel cutout

Rear connection

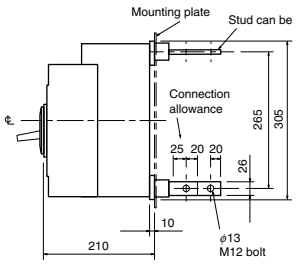

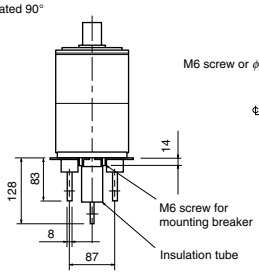

3-pole

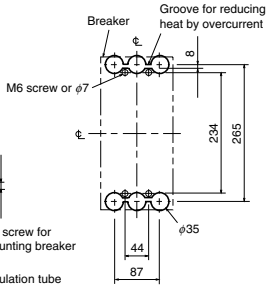

Drilling plan

Boring dimensions for rear connection type barriers (3-pole)

Line side

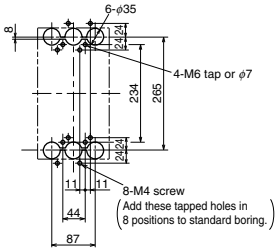

Load side

Note The bore dimensional drawing shows the breaker viewed from the rear.

Plug-in

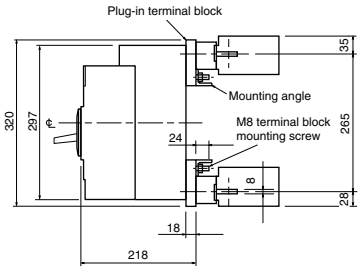

3-pole

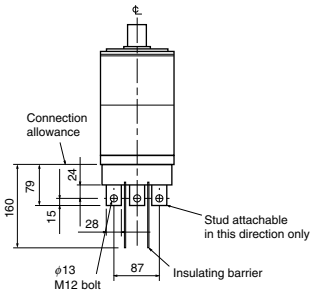

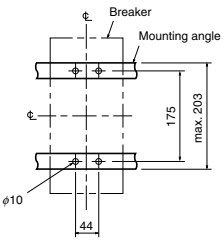

3-pole

Drilling plan

NF630-CW
NF630-SW

NF630-SW

Model				NF630-CW		NF630-SW		
Rated current In (A)				500 600 630				
Number of poles				2	3	2	3	4
Rated insulation voltage Ui (V)				690		690		
Rated short-circuit breaking capacity (kA)	IEC 60947-2 (Icu/Ics)	AC	690V	–		10/10		
			500V	18/9		30/30		
			440V	36/18		42/42		
			400V	36/18		50/50		
			230V	50/25		85/85		
		DC (*1)	250V	20/10		40/40		
Standard attached parts			Front connection	Mounting screw: M6×72 (4pcs) Insulating barrier: (2P: 2pcs, 3P: 4pcs, 4P: 6pcs)				
			Rear connection	Mounting screw: M6×85 (4pcs)				

Note *1 When wired as shown at the bottom of page 14, 3-pole models can be used for up to 400VDC, and 4-pole models for up to 500VDC.

Operating Characteristics

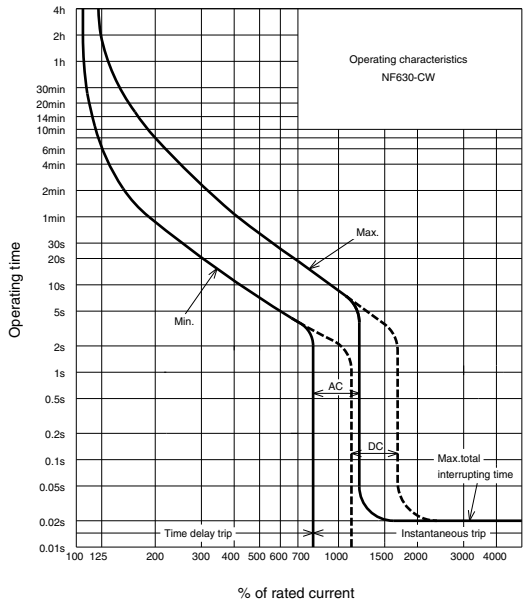

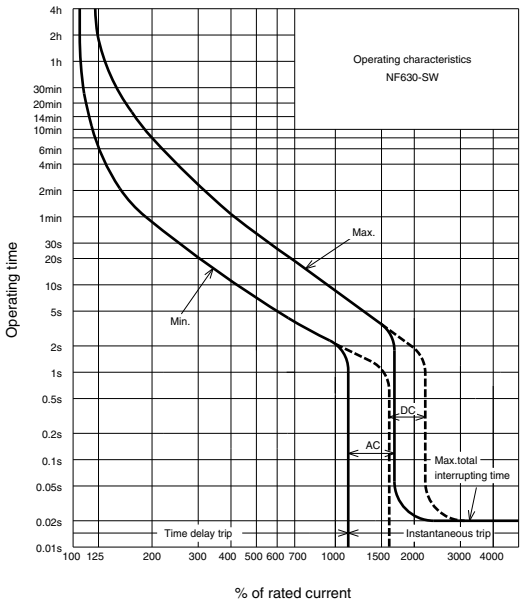

Internal Accessories

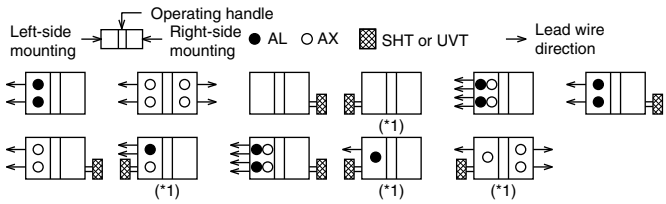

Note *1 Right-side mounting is standard of SHT and UVT. Specify separately for left-side mounting.
Remark: 1. Refer to page 104.

Temperature Compensation Curve

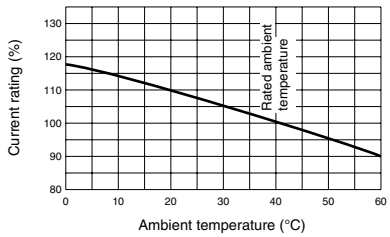

External Accessories

Accessories			Type name	Reference page
Operating handle	F		F-4S	117
	V		V-4S	119
Mechanical interlock	MI	2, 3P	MI-4SW3	129
		4P	MI-4SW4	
Auxiliary handle	HT		HT-4SW	128

Note *1 Specify the operation method and voltage. Order in combination with the breaker unit.

Accessories				Type name	Reference page
Terminal cover	Large	TC-L	2, 3P	TCL-4SW3	121
			4P	TCL-4SW4	
	Skeleton	TTC	2, 3P	TTC-4SW3	
			4P	TTC-4SW4	
	Rear	BTC	2, 3P	BTC-4SW3	
			4P	BTC-4SW4	
Handle lock device		HL		HL-4SW	127
		HL-S		HLS-4SW	
Electrical operation device		NFM	3P	(*1)	133
			4P		

Outline Drawing

Front connection

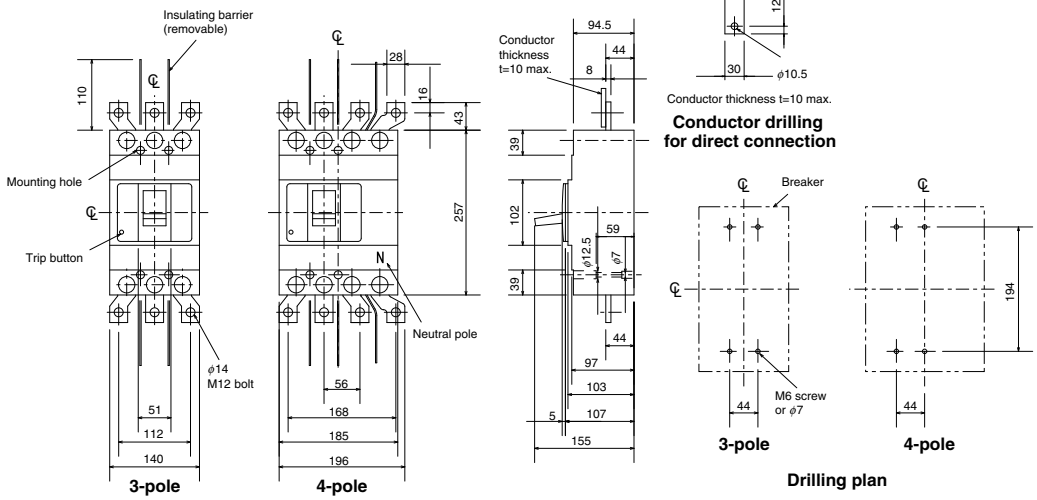

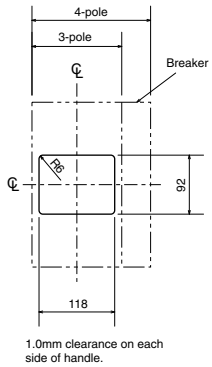

Rear connection

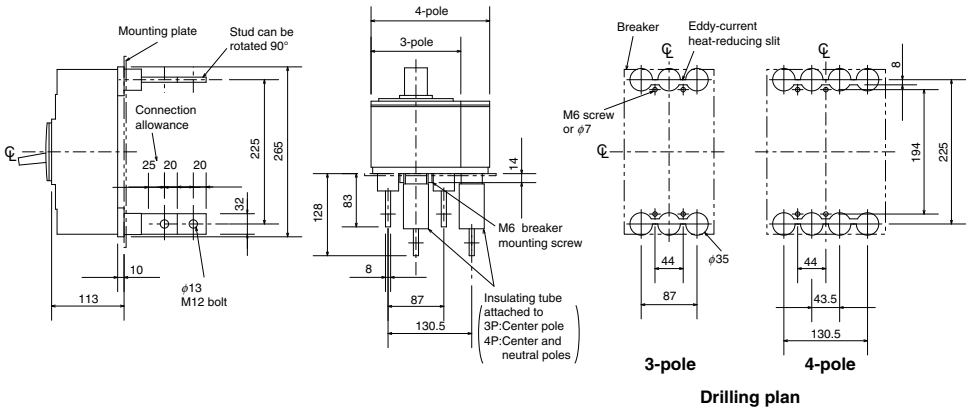

Boring dimensions for rear connection type barriers (3-pole)

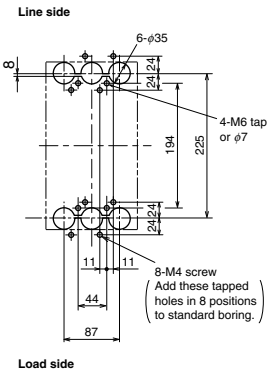

Note The bore dimensional drawing shows the breaker viewed from the rear.

Plug-in

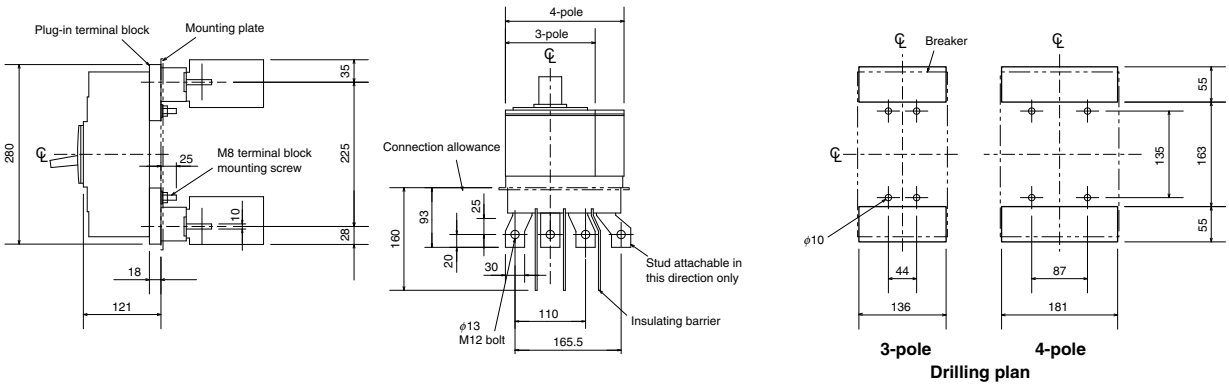

Remark: 1. 2-pole models are 3-pole models with the central pole removed.

NF630-SEW
NF630-HEW
NF630-REW

NF630-SEW

Model				NF630-SEW		NF630-HEW		NF630-REW
Rated current In (A)				300-630 adjustable				
Number of poles				3	4	3	4	3
Rated insulation voltage Ui (V)				690		690		690
Rated short-circuit breaking capacity (kA)	IEC 60947-2 (Icu/Ics)	AC	690V	10/10		35/18		–
			500V	30/30		50/50		70/35
			440V	42/42		65/65		125/63
			400V	50/50		70/70		125/63
			230V	85/85		100/100		150/75
Standard attached parts			Front connection	Mounting screw: M6×72 (4pcs) Insulating barrier: (3P: 4pcs, 4P: 6pcs)				
			Rear connection	Mounting screw: M6×85 (4pcs)				

Operating Characteristics

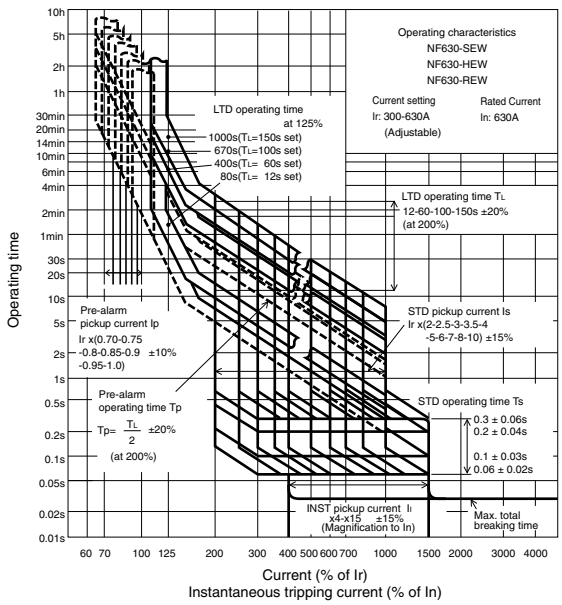

Internal Accessories

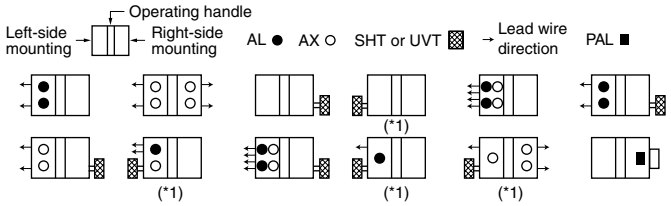

Note *1 Right-side mounting is standard of SHT and UVT. Specify separately for left-side mounting.
Remark: 1. Refer to page 104.

Current Reducing Curve

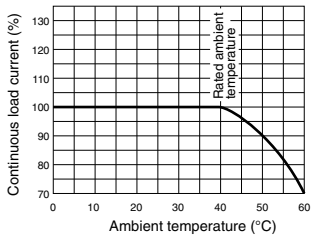

External Accessories

Accessories			Type name	Reference page
Operating handle	F		F-4S	117
	V		V-4S	119
Mechanical interlock	MI	3P	MI-4SW3	129
		4P	MI-4SW4	
Auxiliary handle	HT		HT-4SW	128

Accessories				Type name	Reference page
Terminal cover	Large	TC-L	3P	TCL-4SW3 (*2)	121
			4P	TCL-4SW4 (*3)	
	Skeleton	TTC	3P	TTC-4SW3	
			4P	TTC-4SW4	
	Rear	BTC	3P	BTC-4SW3 (*2)	
			4P	BTC-4SW4 (*3)	
Handle lock device		HL		HL-4SW	127
		HL-S		HLS-4SW	
Electrical operation device		NFM	3P	(*1)	133
			4P		

Notes *1 Specify the operation method and voltage. Order in combination with the breaker unit.
*2 This is for NF630-SEW. For rear terminal cover of NF630-HEW/REW, use PTC-4SW3.
*3 This is for NF630-SEW/HEW.

Outline Drawing

Front connection

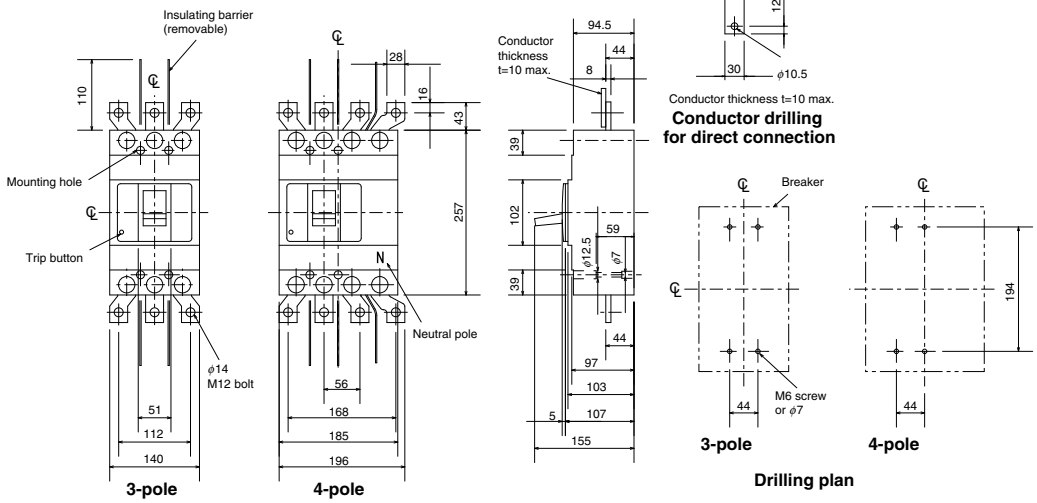

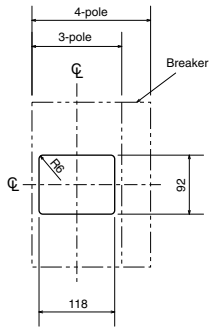

Front-plate cutout

Rear connection

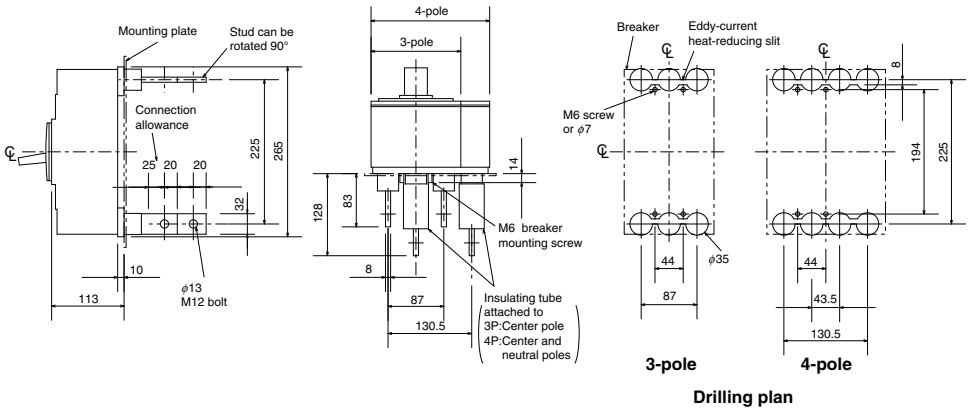

Boring dimensions for rear connection type barriers (3-pole)

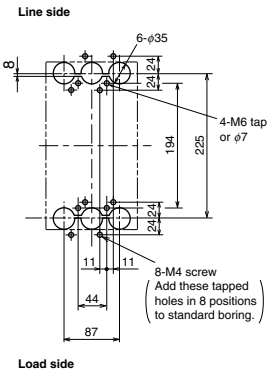

Note The bore dimensional drawing shows the breaker viewed from the rear.

Plug-in

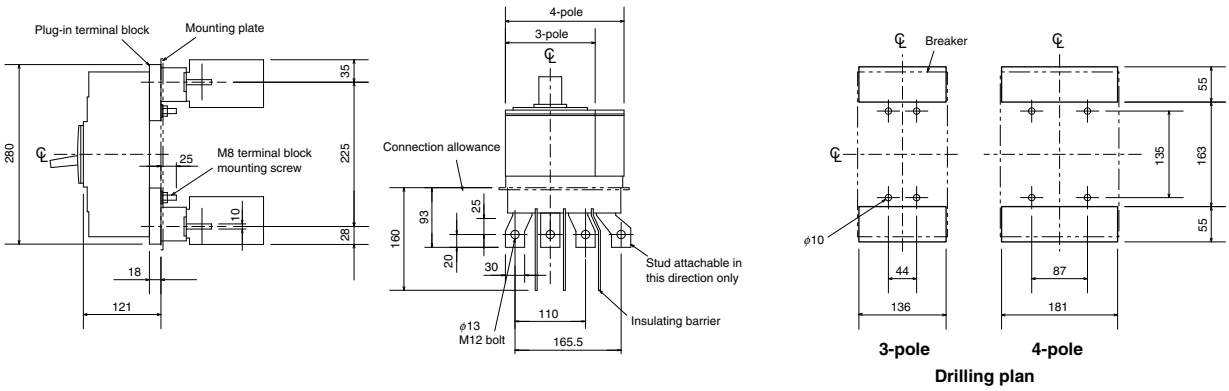

NF800-CEW
NF800-SEW
NF800-HEW
NF800-REW

NF800-SEW

Model				NF800-CEW	NF800-SEW		NF800-HEW		NF800-REW
Rated current In (A)				400-800 adjustable					
Number of poles				3	3	4	3	4	3
Rated insulation voltage Ui (V)				690	690		690		690
Rated short-circuit breaking capacity (kA)	IEC 60947-2 (Icu/Ics)	AC	690V	–	10/10		15/15		–
			500V	18/9	30/30		50/50		70/35
			440V	36/18	42/42		65/65		125/63
			400V	36/18	50/50		70/70		125/63
			230V	50/25	85/85		100/100		150/75
Standard attached parts (4-pole models are provided with auxiliary handle.)			Front connection	Mounting screw: M6×35 (4pcs) Insulating barrier: (3P: 2pcs, 4P: 3pcs)					
			Rear connection	Mounting screw: M6×40 (4pcs)					

Operating Characteristics

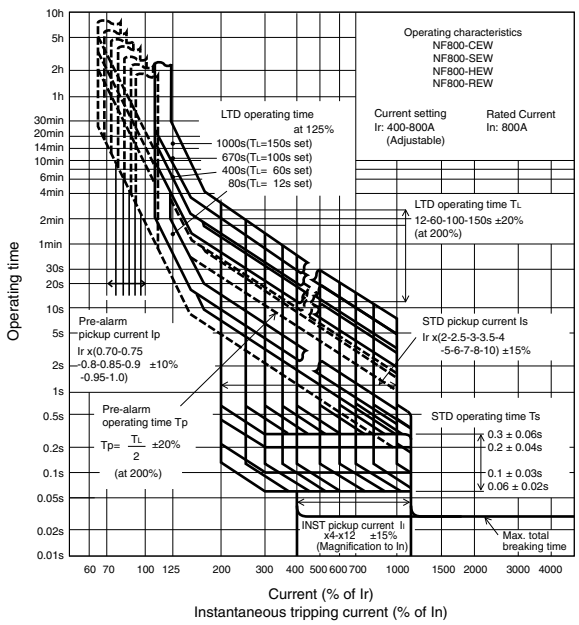

Internal Accessories

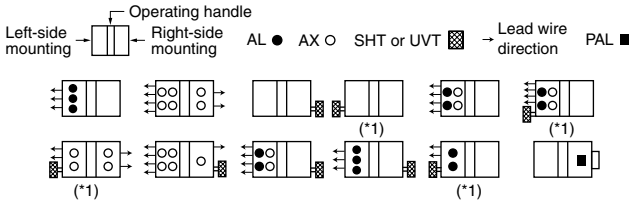

Note *1 Right-side mounting is standard of SHT and UVT. Specify separately for left-side mounting.
Remark: 1. Refer to page 104.

Current Reducing Curve

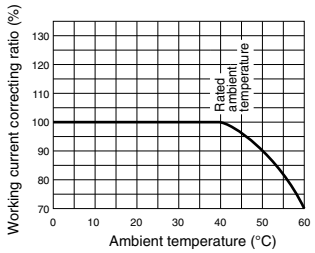

External Accessories

Accessories			Type name	Reference page
Operating handle	F		F-8S	117
	V		V-8S	119
Mechanical interlock	MI	3P	MI-8SW3	129
		4P	MI-8SW4	
Auxiliary handle	HT		HT-4SW	128

Accessories				Type name	Reference page
Terminal cover	Large	TC-L	3P	TCL-8SW3	121
			4P	TCL-8SW4	
	Skeleton	TTC	3P	TTC-8SW3	
			4P	TTC-8SW4	
	Rear	BTC	3P	BTC-8SW3	
			4P	BTC-8SW4	
Handle lock device		HL		HL-4SW	127
		HL-S		HLS-8SW	
Electrical operation device		NFM	3P	(*1)	133
			4P		

Note *1 Specify the operation method and voltage. Order in combination with the breaker unit.

Outline Drawing

Front connection

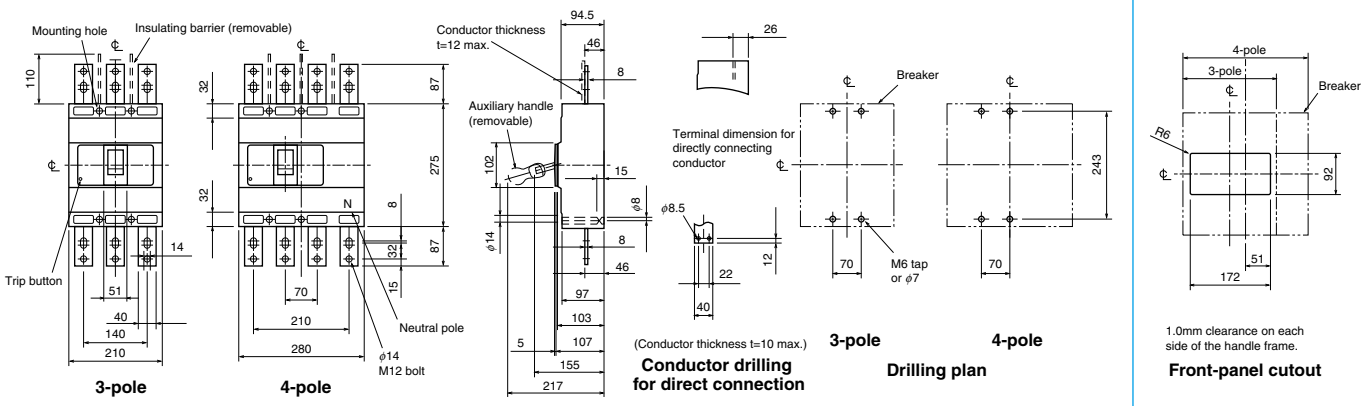

3-pole 4-pole

(Conductor thickness t=10 max.)

Conductor drilling for direct connection

3-pole 4-pole

Drilling plan

Front-panel cutout

Rear connection

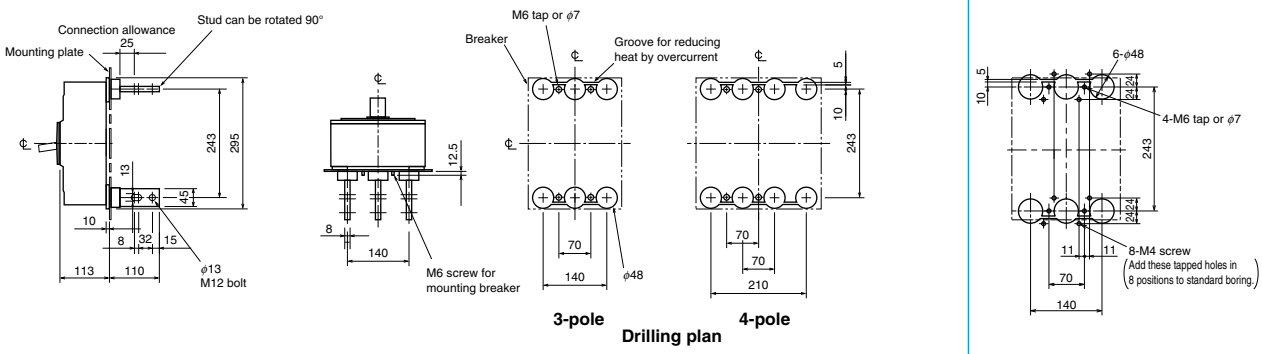

3-pole 4-pole

Drilling plan

Boring dimensions for rear connection type barriers (3-pole)

Plug-in

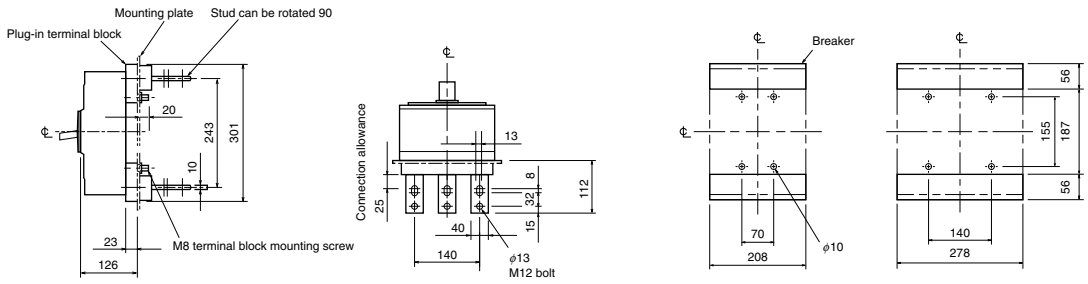

3-pole 4-pole

Drilling plan

NF800-SDW

NF800-SDW

Model				NF800-SDW
Rated current In (A)				(700), 800
Number of poles				2
Rated insulation voltage Ui (V)				690
Rated short-circuit breaking capacity (kA)	IEC 60947-2 (Icu/Ics) Time constant not larger than 10ms	DC	250V	40/40
Standard attached parts (4-pole models are provided with auxiliary handle.)			Front connection	Mounting screw: M6×35 (4pcs) Insulating barrier: (2P: 1pc, 3P: 2pcs, 4P: 3pcs)
			Rear connection	Mounting screw: M6×40 (4pcs)

Operating Characteristics

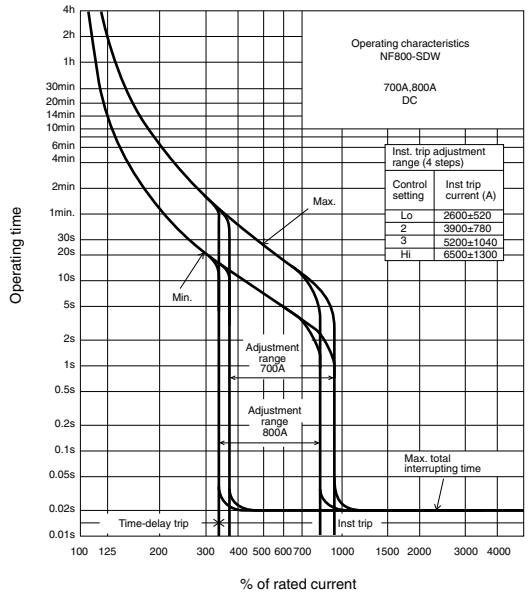

Internal Accessories

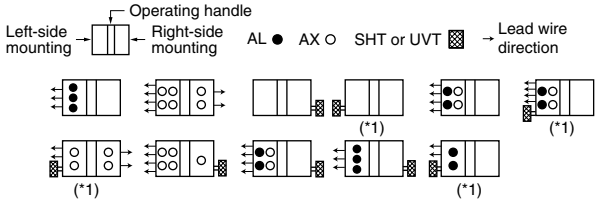

Note *1 Right-side mounting is standard of SHT and UVT. Specify separately for left-side mounting.
Remark: 1. Refer to page 104.

Temperature Compensation Curve

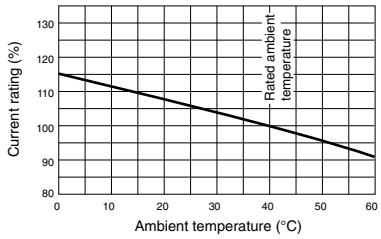

External Accessories

Accessories			Type name	Reference page
Operating handle	F		F-8S	117
	V		V-8S	119
Mechanical interlock	MI	2, 3P	MI-8SW3	129
		4P	MI-8SW4	
Auxiliary handle	HT		HT-4SW	128

Accessories				Type name	Reference page
Terminal cover	Large	TC-L	2, 3P	TCL-8SW3	121
			4P	TCL-8SW4	
	Skeleton	TTC	2, 3P	TTC-8SW3	
			4P	TTC-8SW4	
	Rear	BTC	2, 3P	BTC-8SW3	
			4P	BTC-8SW4	
Handle lock device		HL		HL-4SW	127
		HL-S		HLS-8SW	
Electrical operation device		NFM	2, 3P	(*1)	133
			4P		

Note *1 Specify the operation method and voltage. Order in combination with the breaker unit.

Outline Drawing

Front connection

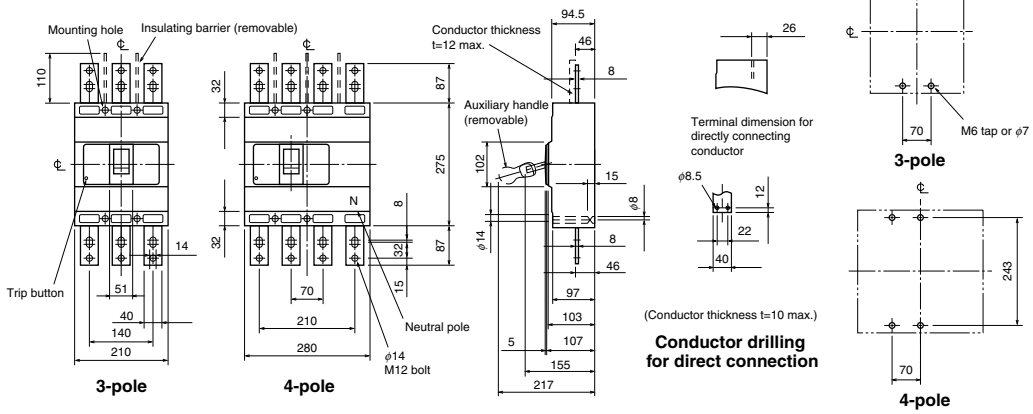

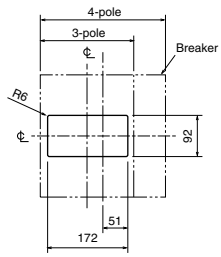

Front-panel cutout

Rear connection

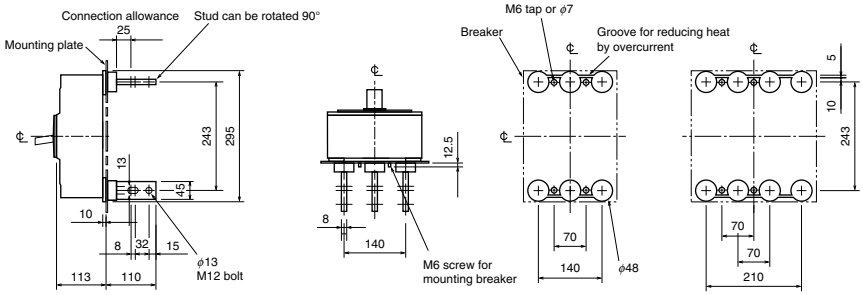

Boring dimensions for rear connection type barriers (3-pole)

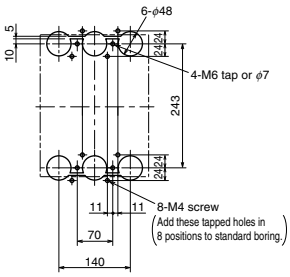

Plug-in

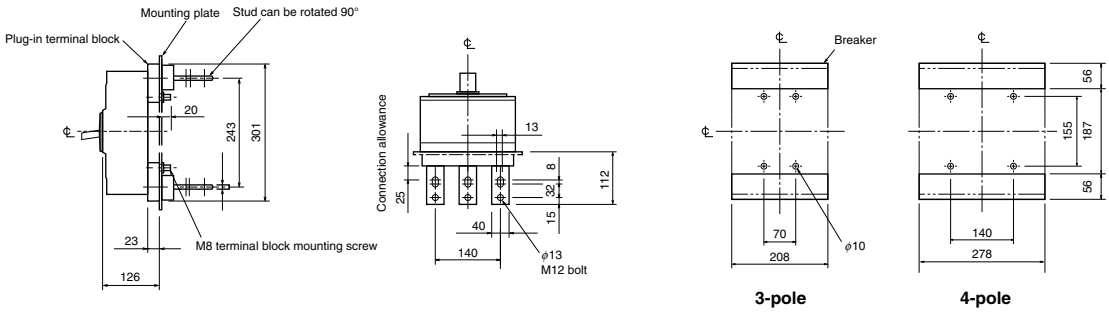

Remarks: 1. Standard specification of NF800-SDW is 2-pole model. 3-pole and 4-pole models are available for DC special voltage.
2. 2-pole models are 3-pole models with the central pole removed.

NF800-UEW

NF800-UEW

Model				NF800-UEW	
Rated current In (A)				400-800 adjustable	
Number of poles				3	4
Rated insulation voltage Ui (V)				690	
Rated short-circuit breaking capacity (kA)	IEC 60947-2 (Icu/Ics)	AC	690V	35/35	
			500V	170/170	
			440V	200/200	
			400V	200/200	
			230V	200/200	
Standard attached parts (4-pole models are provided with auxiliary handle.)			Front connection	Mounting screw: 3P: M6×35, M6×132 (2pcs each) 4P: M6×35 (3pcs), M6×132 (2pcs) Insulating barrier: (3P: 2pcs, 4P: 3pcs)	
			Rear connection	Mounting screw: 3P: M6×40, M6×137 (2pcs each) 4P: M6×40 (3pcs), M6×137 (2pcs)	

Operating Characteristics

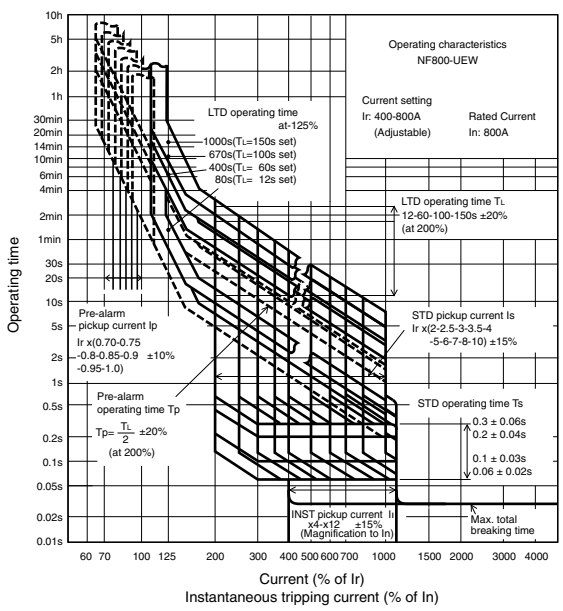

Internal Accessories

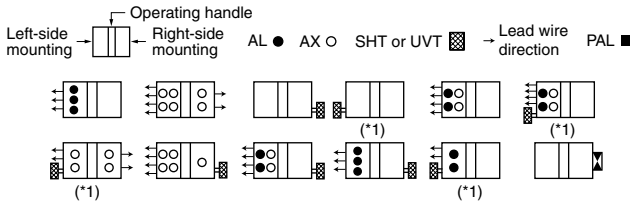

Note *1 Right-side mounting is standard of SHT and UVT. Specify separately for left-side mounting.
Remark: 1. Refer to page 104.

Current Reducing Curve

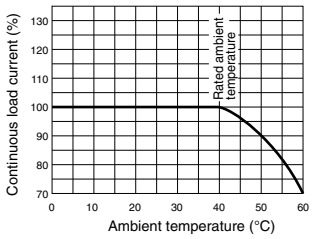

External Accessories

Accessories			Type name	Reference page
Operating handle	F		F-8U	117
	V		–	119
Mechanical interlock	MI	3P	MI-8SW3	129
		4P	MI-8SW4	
Auxiliary handle	HT		HT-4SW	128

Accessories				Type name	Reference page
Terminal cover	Large	TC-L	3P	TCL-8UW3	121
			4P	TCL-8UW4	
	Skeleton	TTC	3P	–	
			4P	–	
	Rear	BTC	3P	BTC-8SW3	
			4P	BTC-8SW4	
Handle lock device		HL		HL-4SW	127
		HL-S		HLS-8UW	
Electrical operation device				(*1)	133

Note *1 Specify the operation method and voltage. Order in combination with the breaker unit.

Outline Drawing

Front connection

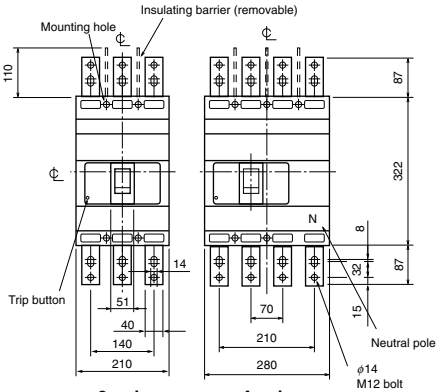

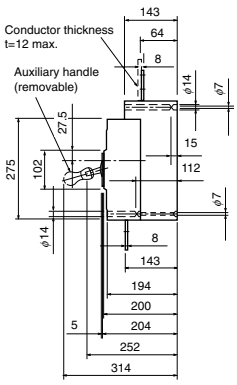

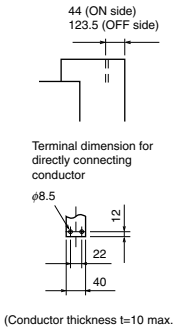

Conductor drilling for direct connection

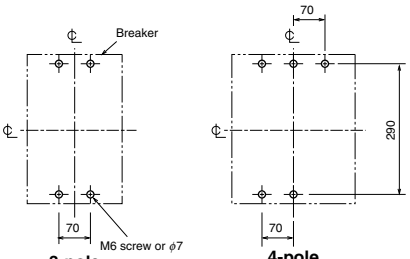

Drilling plan

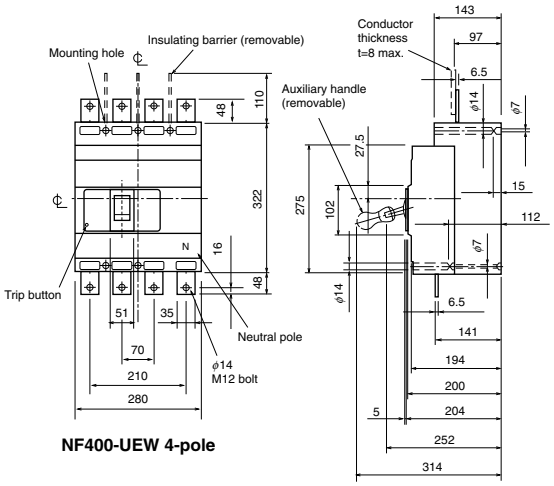

NF400-UEW 4-pole

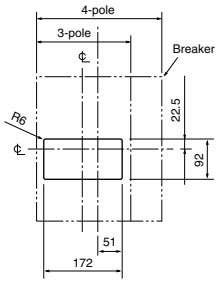

Front-panel cutout

Rear connection

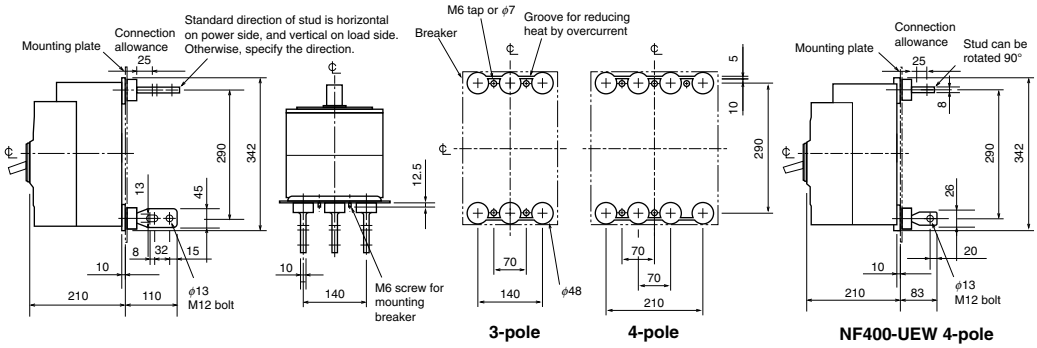

Drilling plan

Boring dimensions for rear connection type barriers (3-pole)

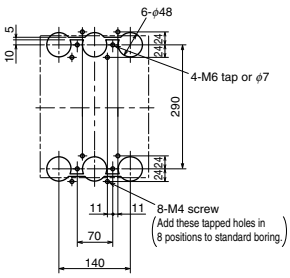

NF1000-SEW
NF1250-SEW

NF1250-SEW

Model				NF1000-SEW		NF1250-SEW	
Rated current In (A)				500–1000 Adjustable		600–1250 Adjustable	
Number of poles				3	4	3	4
Rated insulation voltage Ui (V)				690		690	
Rated short-circuit breaking capacity (kA)	IEC 60947-2 (Icu/Ics)	AC	690V	25/13		25/13	
			500V	65/33		65/33	
			440V	85/43		85/43	
			400V	85/43		85/43	
			230V	125/63		125/63	
Standard attached parts			Front connection	Mounting screw: M8×40 (4pcs) Insulating barrier: (3P: 2pcs, 4P: 3pcs) Auxiliary handle: (1pc)			
			Rear connection	Mounting screw: M8×40 (4pcs) Insulating barrier: (3P: 2pcs, 4P: 4pcs) Auxiliary handle: (1pc)			

Operating Characteristics

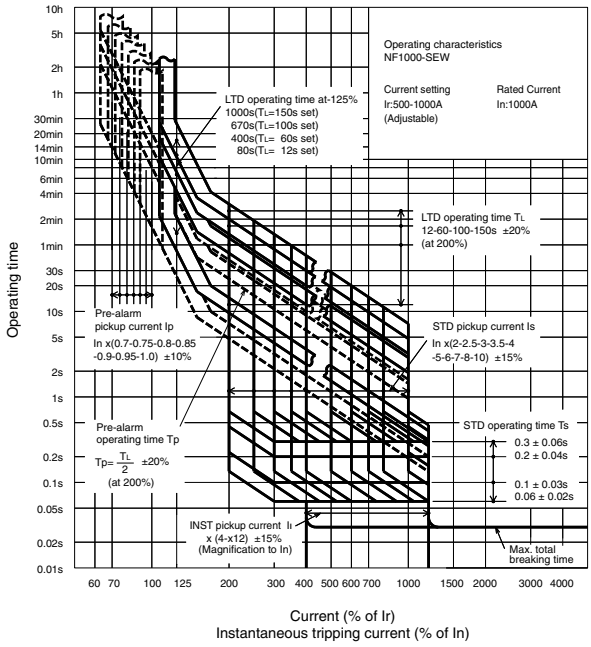

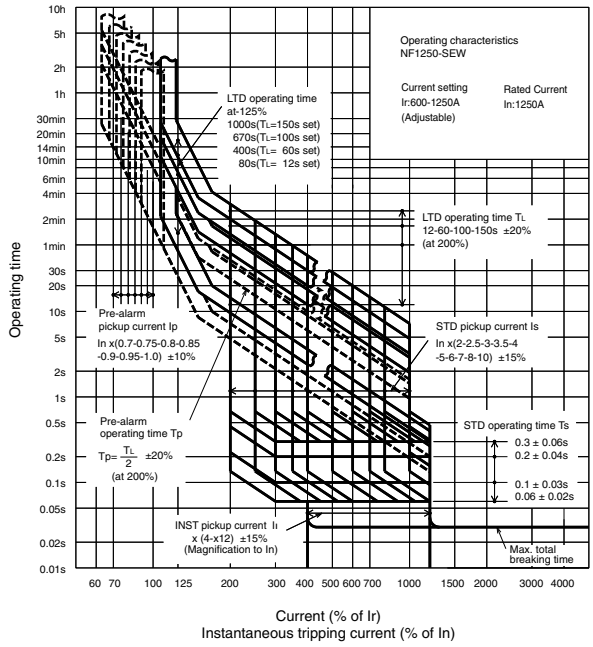

Internal Accessories

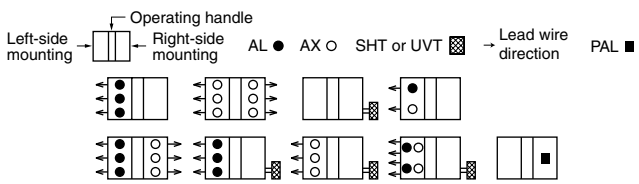

Remark: 1. Refer to page 104.

Current Reducing Curve

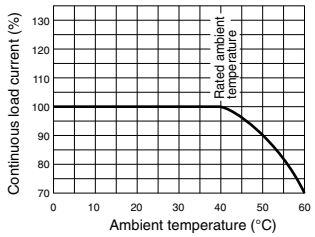

External Accessories

(An order for ☆ should be placed at the same time as an order of circuit breaker main body.)

Accessories			Type name	Reference page	Accessories			Type name	Reference page
Operating handle	F	3P	F10SW	117	Auxiliary handle	HT		HT-10SW	128
		4P	F10SW4P		Handle lock device	HL		HL (☆)	127
Mechanical interlock	MI	3P	MI-10SW3	129	Large terminal cover	TC-L	3P	TCL-10SW3	121
		4P	MI-10SW4				4P	TCL-10SW4	
					Electrical operation device	NFM	3P 4P	(*1)	133

Note *1 Specify the operation method and voltage. Order in combination with the breaker unit.

Outline Drawing

Front connection

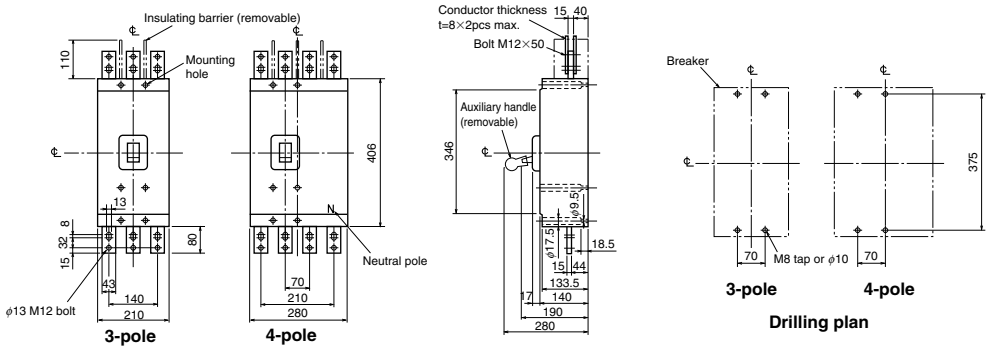

Rear connection

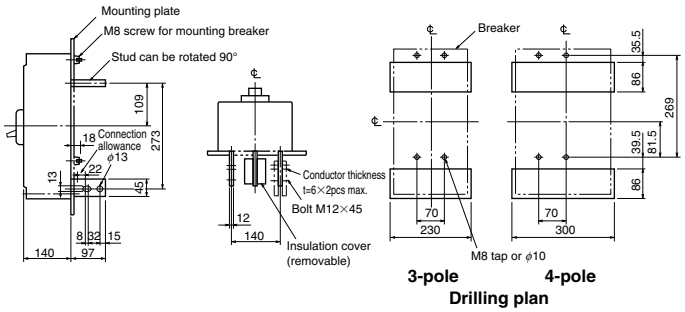

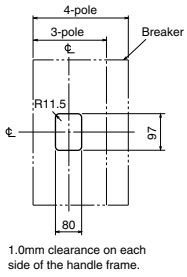

Plug-in

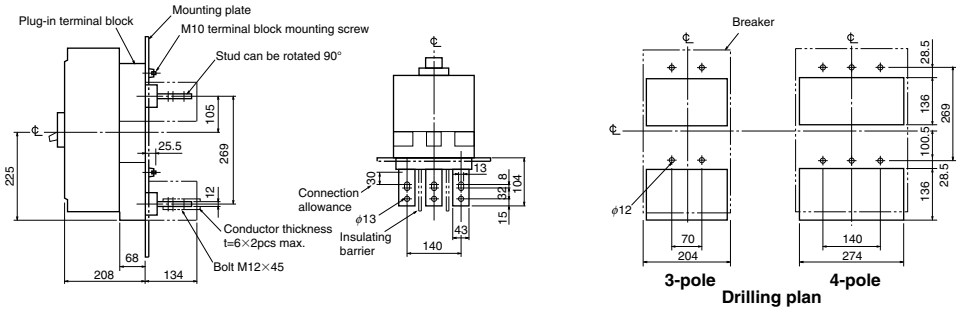

NF1250-SDW

NF1250-SDW

Model				NF1250-SDW
Rated current In (Amp.)				1000, 1250
Number of poles				2
Rated insulation voltage Ui (V)				690
Rated short-circuit breaking capacity (kA)	IEC 60947-2 (Icu/Ics) Time constant not large than 10ms	DC	250V	40/20
Standard Attached parts			Front connection	Mounting screw: M8×40 (4pcs) Insulating barrier: (2P: 1pc, 3P: 2pcs, 4P: 3pcs) Auxiliary handle: (1pc)
			Rear connection	Mounting screw: M8×40 (4pcs) Insulating barrier: (3P: 2pcs, 4P: 4pcs) Auxiliary handle: (1pc)

Operating Characteristics

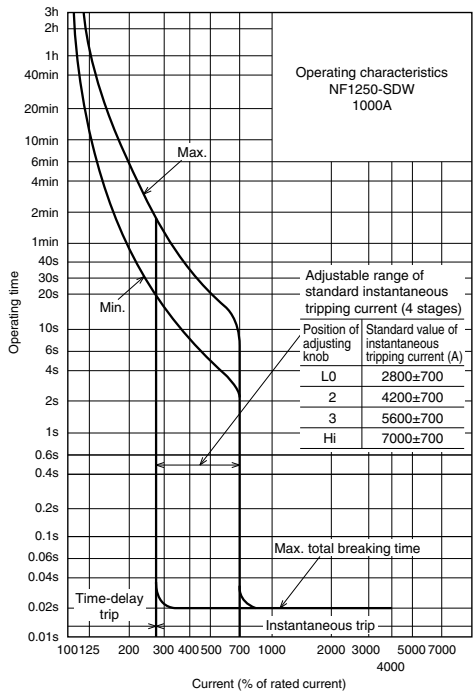

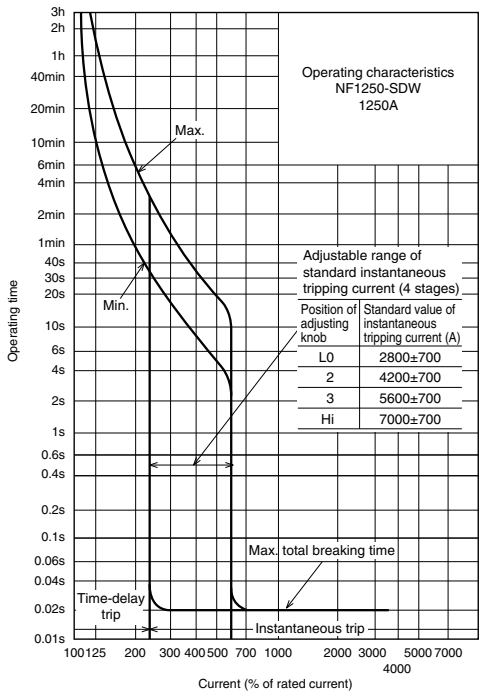

Internal Accessories

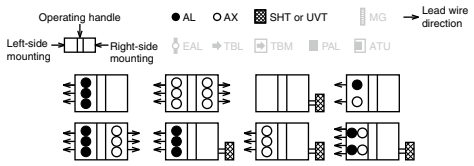

Temperature Compensation Curve

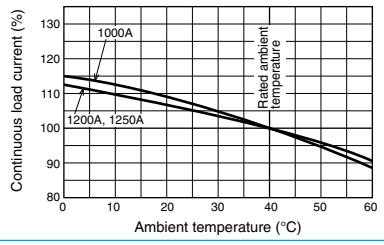

External Accessories

(An order for ☆ should be placed at the same time as an order of circuit breaker main body.)

Accessories			Type name	Reference page	Accessories			Type name	Reference page
Operating handle	F	2, 3P	F10SW	117	Auxiliary handle	HT		HT-10SW	128
		4P	F10SW4P		Handle lock device	HL		HL (☆)	127
Mechanical interlock	MI	2, 3P	MI-10SW3	129	Large terminal cover	TC-L	2, 3P	TCL-10SW3	121
		4P	MI-10SW4				4P	TCL-10SW4	
					Electrical operation device	NFM	2, 3P	(*1)	133
							4P		

Note *1 Specify the operation method and voltage. Order in combination with the breaker unit.

Outline Drawing

Front connection

Same dimensions as NF1000-SEW and NF1250-SEW.

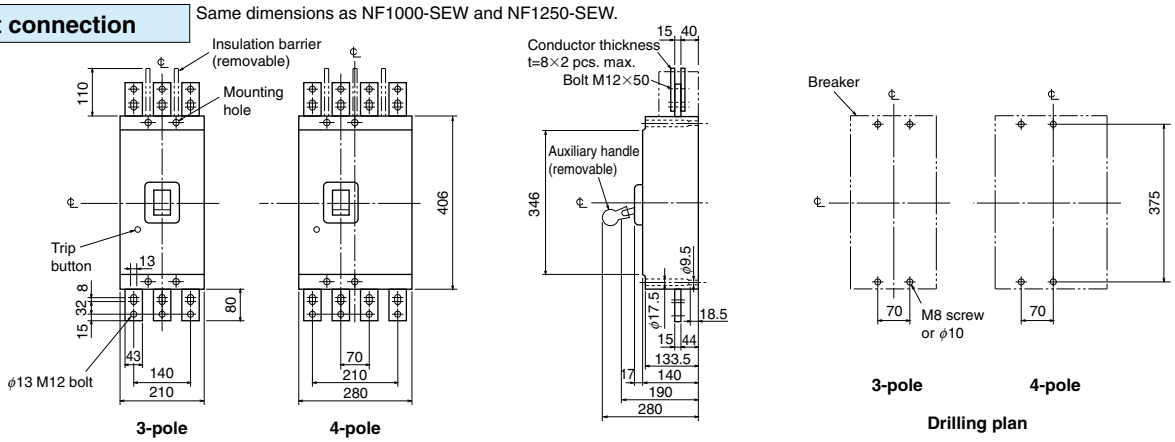

Rear connection

Differing in external dimensions from NF1000-SEW and NF1250-SEW.

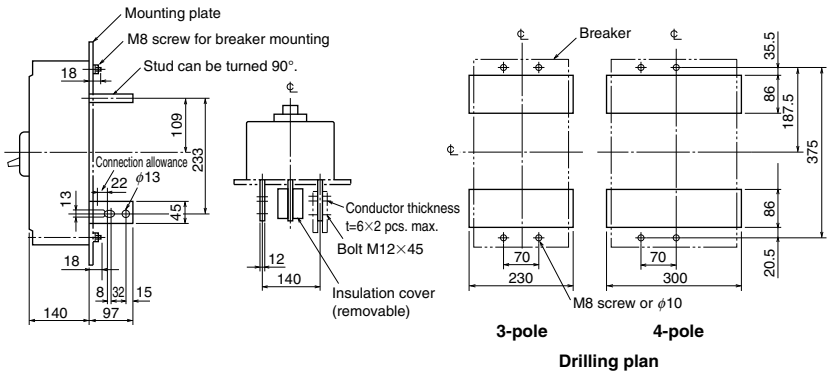

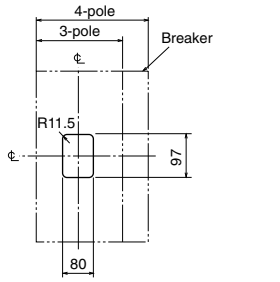

Front-panel cutout

Plug-in

Differing in external dimensions from NF1000-SEW and NF1250-SEW.

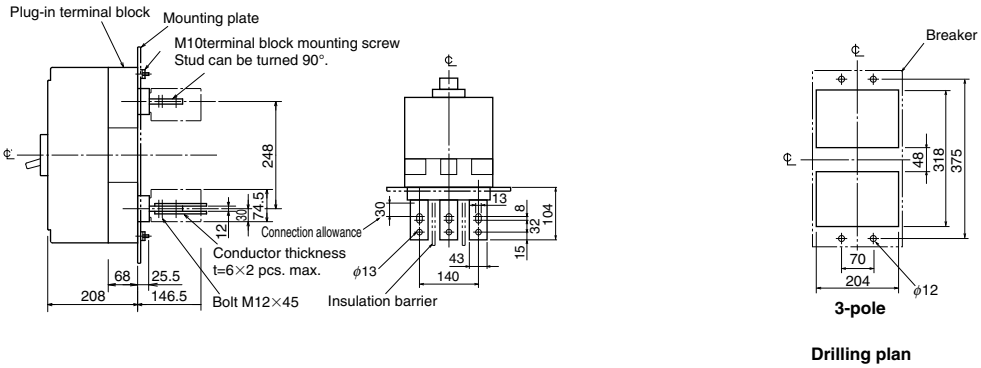

Remarks: 1. Standard specification of NF1250-SDW is 2-pole model. 3-pole and 4-pole models are available for DC special voltage.
2. 2-pole models are 3-pole models with the central pole removed.

NF1600-SEW

NF1600-SEW

Model				NF1600-SEW	
Rated current In (A)				Adjustable 800–1600	
Number of poles				3	4
Rated insulation voltage Ui (V)				690	
Rated short-circuit breaking capacity (kA)	IEC 60947-2 (Icu/Ics)	AC	690V	25/13	
			500V	65/33	
			440V	85/43	
			400V	85/43	
			230V	125/63	
Standard attached parts			Front connection	Mounting screw: M8 × 40 (4pcs) Insulating barrier: (3P: 2pcs, 4P: 3pcs) Auxiliary handle: (1pc)	
			Rear connection	Mounting screw: M8 × 40 (4pcs) Auxiliary handle: (1pc)	

Operating Characteristics

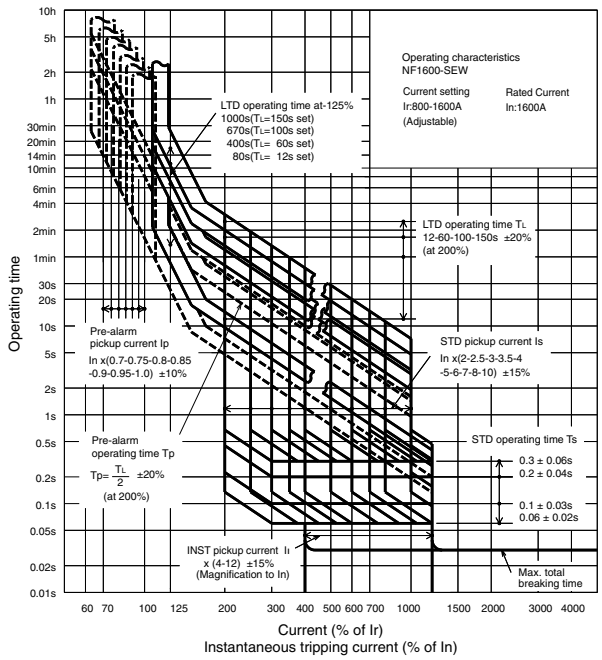

Internal Accessories

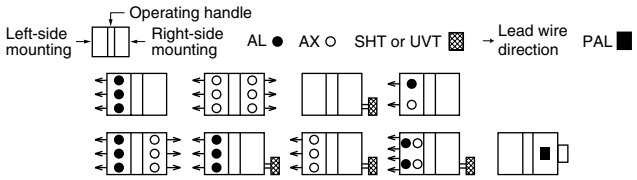

Remark: 1. Refer to page 104.

Current Reducing Curve

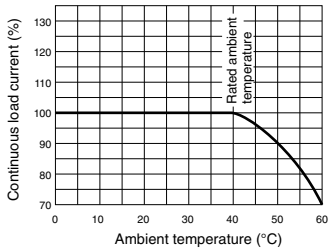

External Accessories

(An order for ☆ should be placed at the same time as an order of circuit breaker main body.)

Accessories			Type name	Reference page	Accessories			Type name	Reference page
Operating handle	F	3P	F10SW	117	Auxiliary handle	HT		HT-10SW	128
		4P	F10SW4P		Handle lock device	HL		HL (☆)	127
Mechanical interlock	MI	3P	MI-16SW3	129	Electrical operation device	NFM	3P	(*1)	133
		4P	MI-16SW4				4P		

Note *1 Specify the operation method and voltage. Order in combination with the breaker unit.

Outline Drawing

Front connection

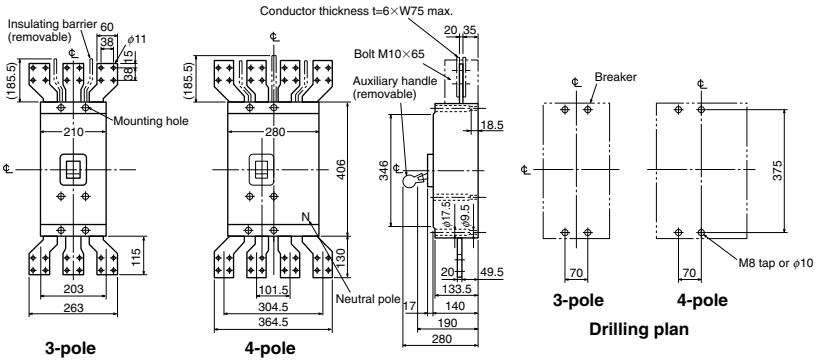

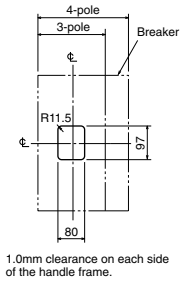

Front-panel cutout

Rear connection

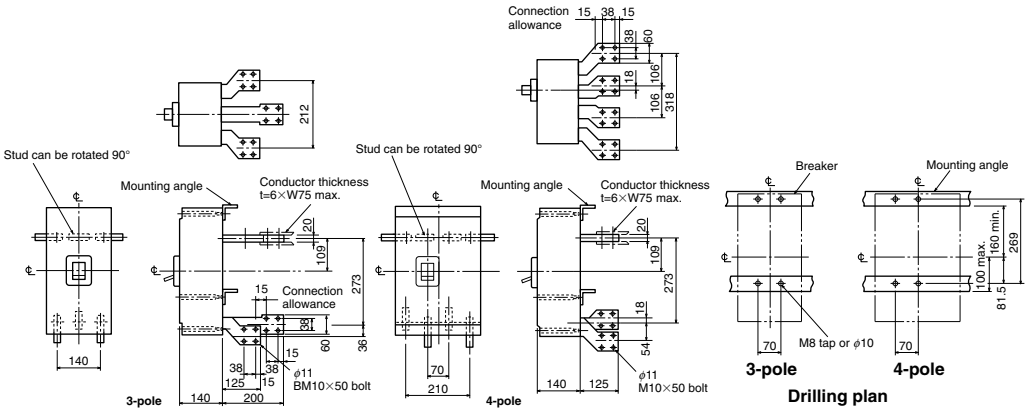

NF1600-SDW

NF1600-SDW

Model				NF1600-SDW
Rated current In (Amp.)				1600
Number of poles				2
Rated insulation voltage Ui (V)				690
Rated short-circuit breaking capacity (kA)	IEC 60947-2 (Icu/Ics) Time constant not large than 10msec	DC	250V	40/20
Standard Attached parts			Front connection	Mounting screw: M8×40 (4pcs) Insulating barrier: (2P: 1pc, 3P: 2pcs, 4P: 3pcs) Auxiliary handle: (1pc)
			Rear connection	Mounting screw: M8×40 (4pcs) Auxiliary handle: (1pc)

Operating Characteristics

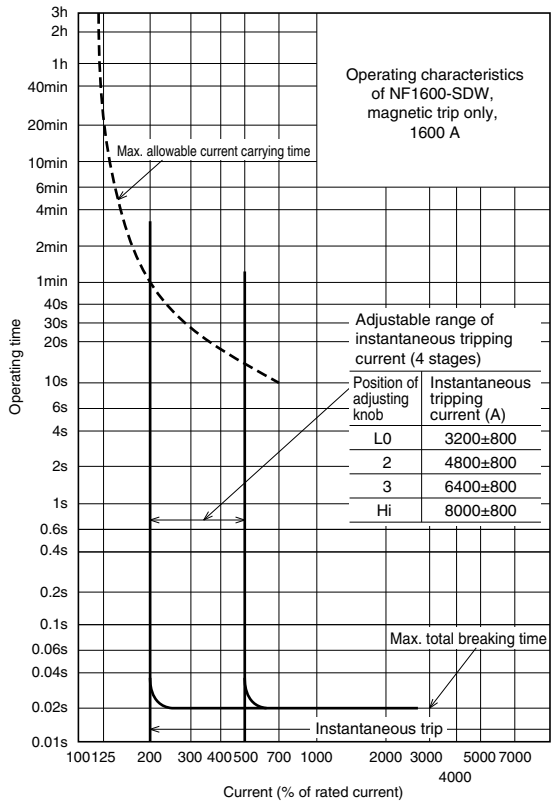

Internal Accessories

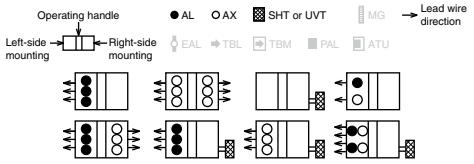

External Accessories

(An order for ☆ should be placed at the same time as an order of circuit breaker main body.)

Accessories			Type name	Reference page	Accessories			Type name	Reference page
Operating handle	F	2, 3P	F10SW	117	Auxiliary handle	HT		HT-10SW	128
		4P	F10SW4P		Handle lock device	HL		HL (☆)	127
Mechanical interlock	MI	2, 3P	MI-16SW3	129	Electrical operation device	NFM	2, 3P	(*1)	133
		4P	MI-16SW4				4P		

Note *1 Specify the operation method and voltage. Order in combination with the breaker unit.

Outline Drawing

Front connection

Same dimensions as NF1600-SEW.

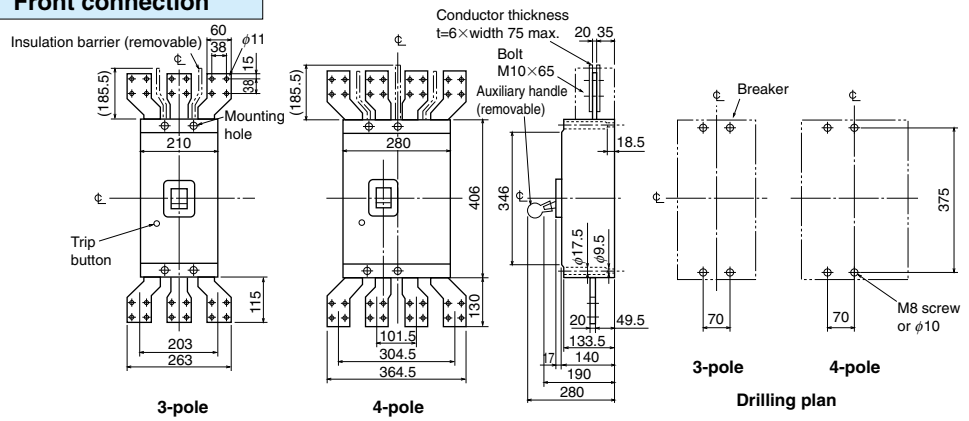

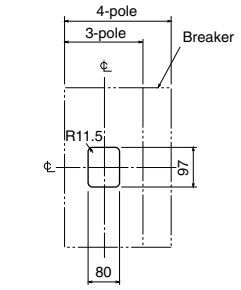

1.0mm clearance on each side of the handle frame

Front-panel cutout

Rear connection

Differing in external dimensions from NF1600-SEW.

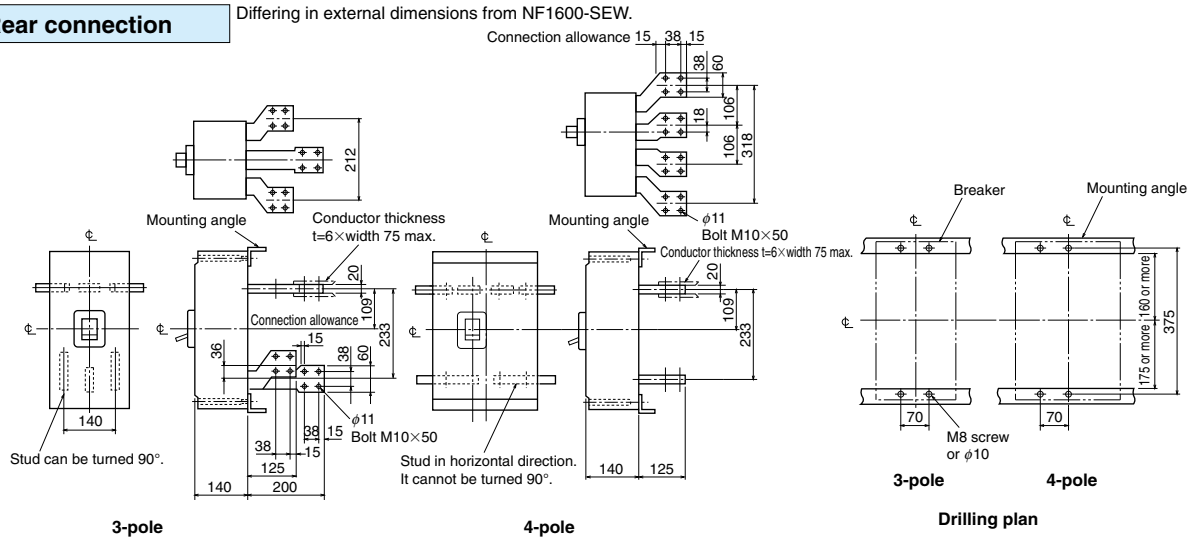

Remarks: 1. Standard specification of NF1600-SDW is 2-pole model. 3-pole and 4-pole models are available for DC special voltage.
2. 2-pole models are 3-pole models with the central pole removed.

NV32-SV
NV63-CV
NV63-SV
NV63-HV

NV63-SV

Model				NV32-SV	NV63-CV		NV63-SV		NV63-HV
Rated current In (A)				(5) 6 10 (15) 16 20 25 (30) 32	(5) (10) (15) 16 20 25 (30) 32 40 50 (60) 63		(5) (10) (15) 16 20 25 (30) 32 40 50 (60) 63		(15) 16 20 (30) 32 40 50 (60) 63
Number of poles				3	2	3	2	3	3
Phase line				3φ3W, 1φ2W	1φ2W	3φ3W, 1φ2W	1φ2W	3φ3W, 1φ2W	3φ3W, 1φ2W
Rated operational voltage Ue (V)			AC	100-440	100-240	100-440	100-240	100-440	100-440
High-speed type	Rated current sensitivity (mA)			(15) 30 100/200/500 selectable	30	15 30 100/200/500 selectable	(15) 30	(15) 30 100/200/500 selectable	(15) 30 100/200/500 selectable
	Max operating time (s)		at IΔn	0.1	0.1		0.1		0.1
			at 5IΔn	0.04	0.04		0.04		0.04
Time-delay type	Rated current sensitivity (mA)			–	–		–		–
	Max operating time (s)			–	–		–		–
	Inertial operating time (s) (or more)			–	–		–		–
Earth-leakage indication system				Mechanical type (button)	Mechanical type (button)		Mechanical type (button)		Mechanical type (button)
Rated short-circuit breaking capacity (kA)	IEC 60947-2 (Icu/Ics)	AC	440V	5/5	–	2.5/2.5	–	7.5/7.5	10/8
			415V	5/5	–	2.5/2.5	–	7.5/7.5	10/8
			400V	5/5	–	5/5	–	7.5/7.5	10/8
			230V	10/10	7.5/7.5		15/15		25/19
			200V	10/10	7.5/7.5		15/15		25/19
			100V	10/10	7.5/7.5		15/15		25/19
Standard attached parts (Front connection)				Mounting screw: M4×0.7×55 (2pcs) (*1) Insulation barrier: (2P: 1pc, 3P: 2pcs)					

Note *1 Attached to NV63-SV and NV63-HV.

Operating Characteristics

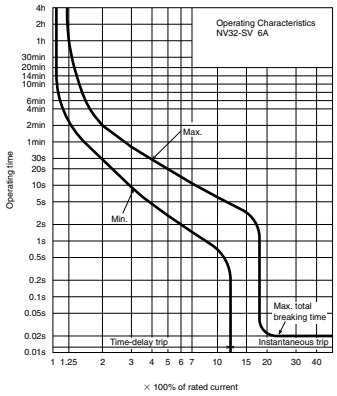

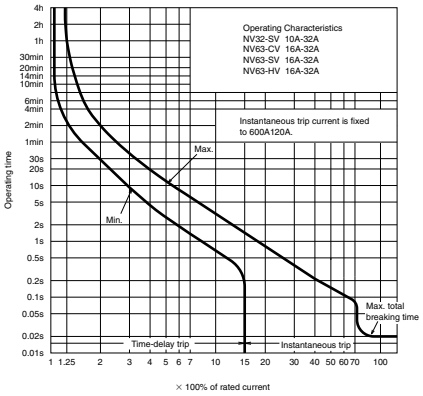

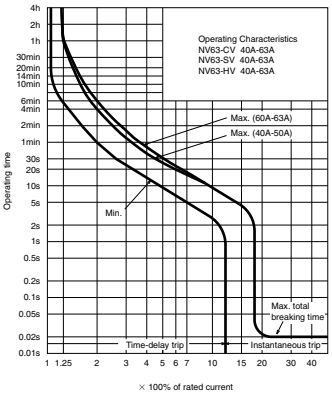

Earth leakage Tripping Characteristics

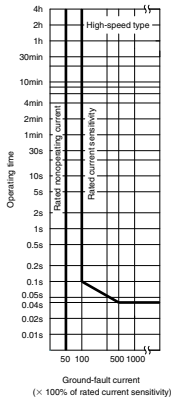

Internal Accessories

Temperature Compensation Curve

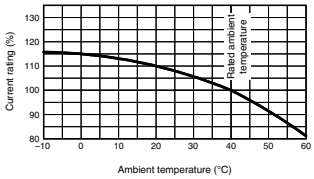

Internal Wiring Diagram

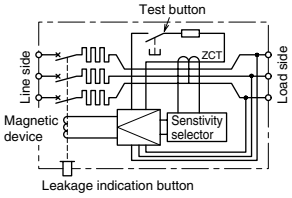

External Accessories

Accessories		Type name	Reference page
Operating handle	F	F-05SV	117
	V	V-05SV	119
Handle lock device	LC	LC-05SV	127
	HL (*1)	HLF-05SV	
		HLN-05SV	
	HL-S	HLS-05SV	

Note *1 HLF types are used for OFF lock and HLN types for ON lock.

Accessories			Type name	Reference page
Mechanical interlock		MI	MI-05SV3	129
Terminal cover	Small	TC-S	TCS-05SV3	121
	Large	TC-L	TCL-05SV3	
			TCL-05SV3L	
	Skeleton	TTC	TTC-05SV3	
	Rear	BTC	BTC-05SV3	
	Plug-in	PTC	PTC-05SV3	
IEC 35mm rail mounting adapters			DIN-05SV	137

Outline Drawing

Front connection

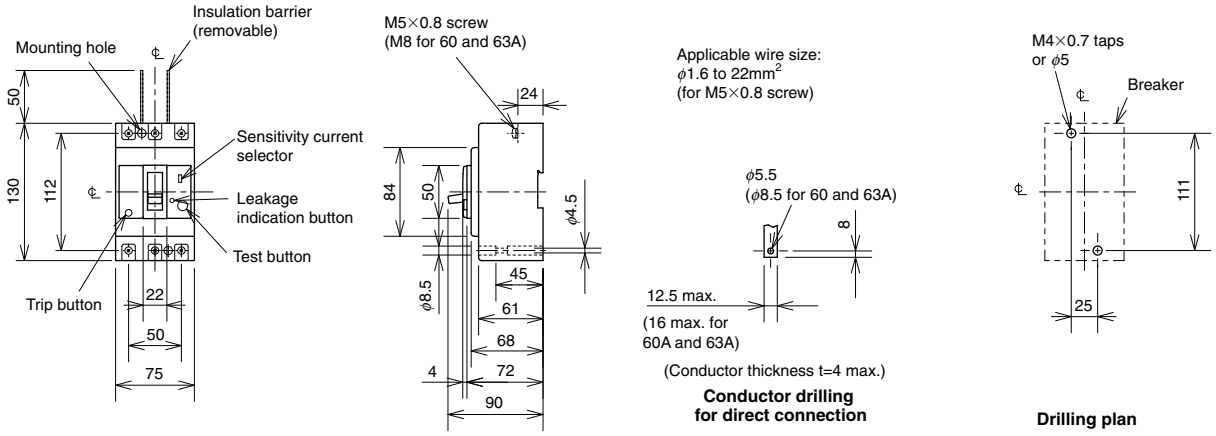

Rear connection

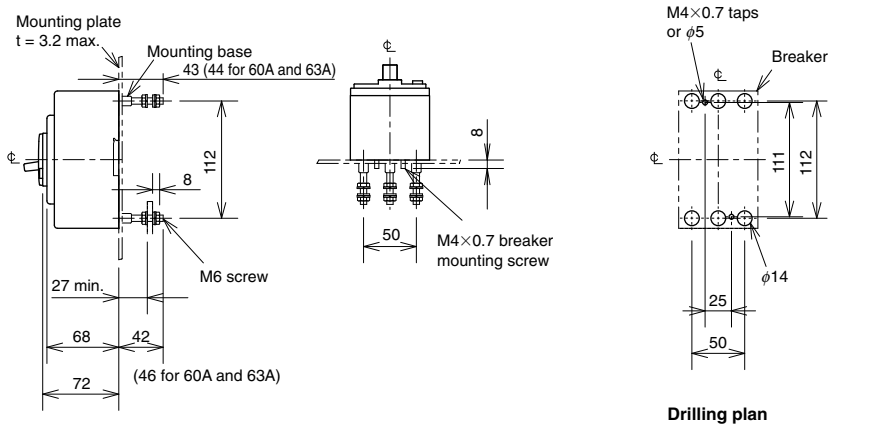

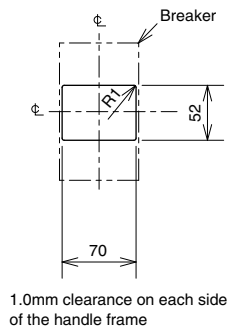

Plug-in

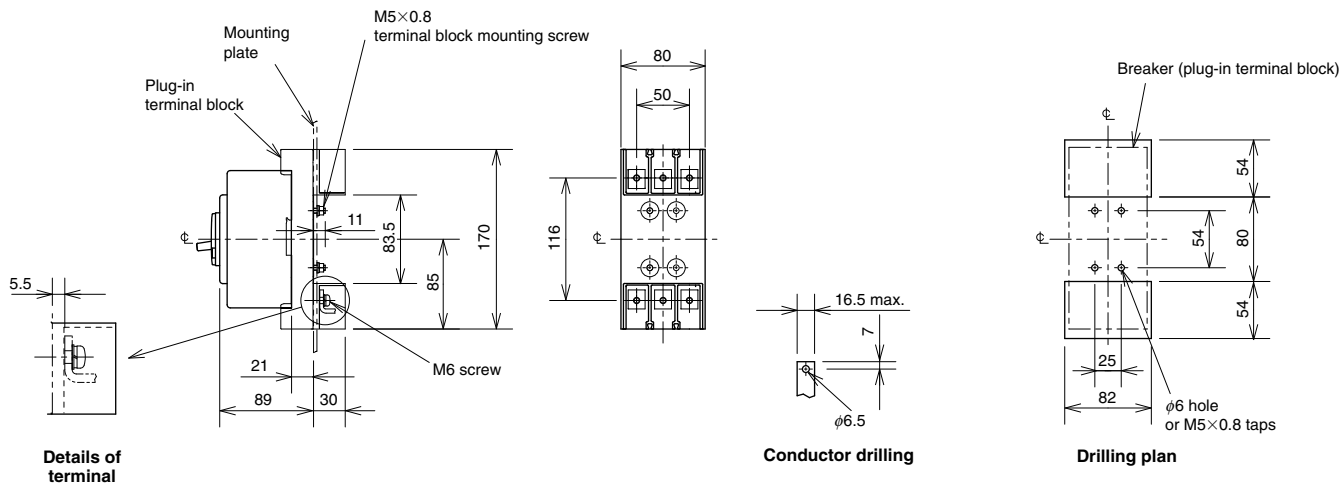

Remark: 1. 2-pole models are 3-pole models with the central pole removed.

NV125-CV
NV125-SV
NV125-HV

NV125-SV

Model				NV125-CV	NV125-SV		NV125-HV	
Rated current In (A)				(60) 63 (75) 80 100 125	(15) 16 20 30 32 40 50 (60) 63 (75) 80 100 125 (*2)		(15) 16 20 (30) 32 40 50 (60) 63 75 80 100 125 (*2)	
Number of poles				3	3	4	3	4
Phase line				3ϕ3W, 1ϕ2W	3ϕ3W, 1ϕ2W	3ϕ4W	3ϕ3W, 1ϕ2W	3ϕ4W
Rated operational voltage Ue (V)			AC	100-440	100-440	200-440	100-440	200-440
High-speed type	Rated current sensitivity (mA)			(15) 30 100/200/500 selectable	30 100/200/500 selectable		(30) 100/200/500 selectable	
	Max operating time (s)		at IΔn	0.1	0.1		0.1	
			at 5IΔn	0.04	0.04		0.04	
Time-delay type	Rated current sensitivity (mA)			(100/200/500 selectable)	(100/200/500 selectable)		(100/200/500 selectable)	
	Max operating time (s)			(0.45/1.0/2.0 selectable)	(0.45/1.0/2.0 selectable)		(0.45/1.0/2.0 selectable)	
	Inertial operating time (s) (or more)			(0.1/0.5/1.0)	(0.1/0.5/1.0)		(0.1/0.5/1.0)	
Earth-leakage indication system				Mechanical type (button)	Mechanical type (button)		Mechanical type (button)	
Rated short-circuit breaking capacity (kA)	IEC 60947-2 (Icu/Ics)	AC	440V	10/5	25/25		50/38	
			415V	10/5	30/30		50/38	
			400V	10/5	30/30		50/38	
			230V	30/15	50/50		100/75	
			200V	30/15	50/50		100/75	
			100V	30/15	50/50	–	100/75	–
Standard attached parts (Front connection)				Mounting screw: M4×0.7×55 (3P: 2pcs, 4P: 4pcs) (*1) Insulation barrier: (3P: 2pcs, 4P: 3pcs)				

Note *1 Attached to NV125-SV and NV125-HV.
*2 In case of time delay type, rated current is prodused with 20 amp. or more.

Operating Characteristics

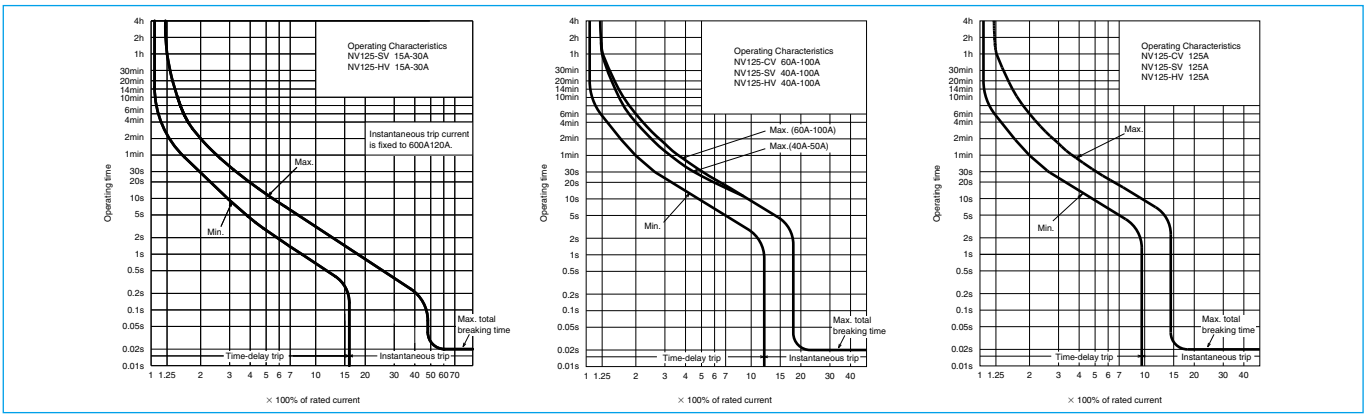

Earth leakage Tripping Characteristics

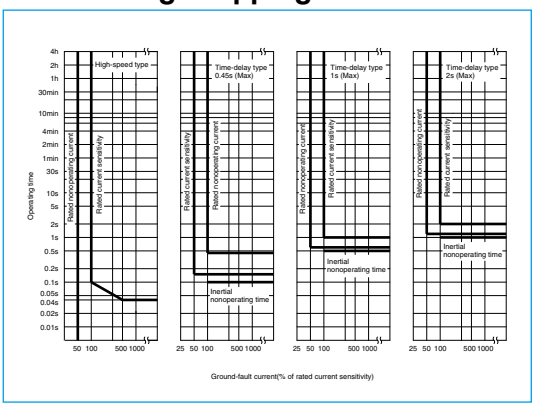

Internal Accessories

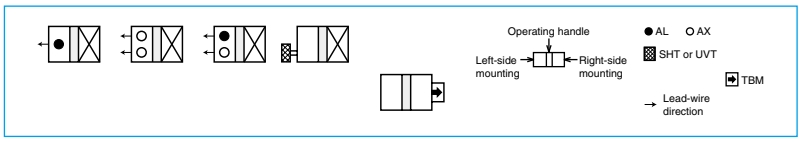

Temperature Compensation Curve

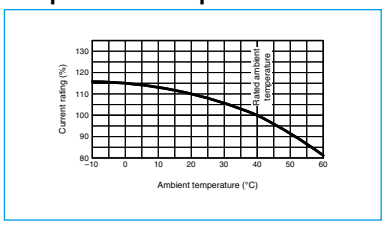

Internal Wiring Diagram

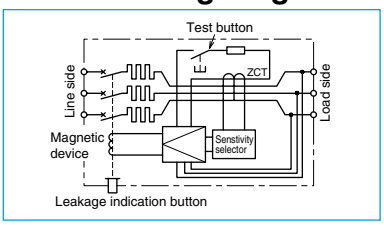

External Accessories

Accessories		Type name	Reference page
Operating handle	F	F-1SV	117
	V	V-1SV	119
Handle lock device	LC	LC-05SV	127
	HL (*1)	HLF-05SV	
		HLN-05SV	
	HL-S	HLS-05SV	

Accessories				Type name	Reference page
Mechanical interlock		MI	3P	MI-05SV3	129
			4P	MI-1SV4	
Terminal cover	Small	TC-S		TCS-1SV3	121
	Large	TC-L	3P	TCL-1SV3	
			4P	TCL-1SV4	
	Skeleton	TTC		TTC-1SV3	
	Rear	BTC		BTC-1SV3	
	Plug-in	PTC		PTC-1SV3	
Electrical operation device				(*2)	133

Notes *1 HLF types are used for OFF lock and HLN types for ON lock.
*2 Specify the working voltage. Refer to the reference page for type name.

Outline Drawing

Front connection

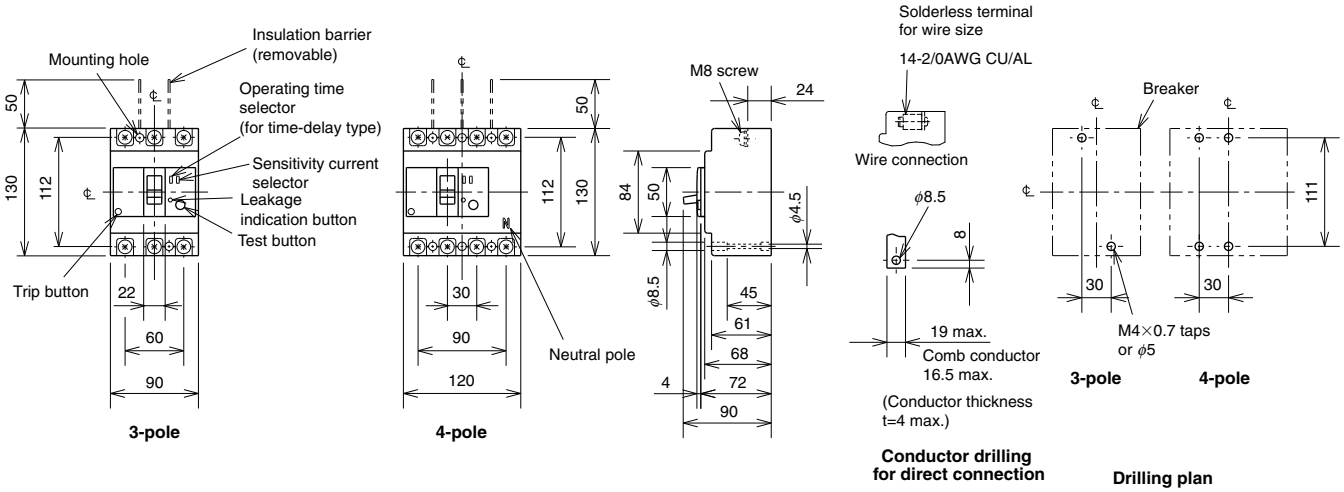

Rear connection

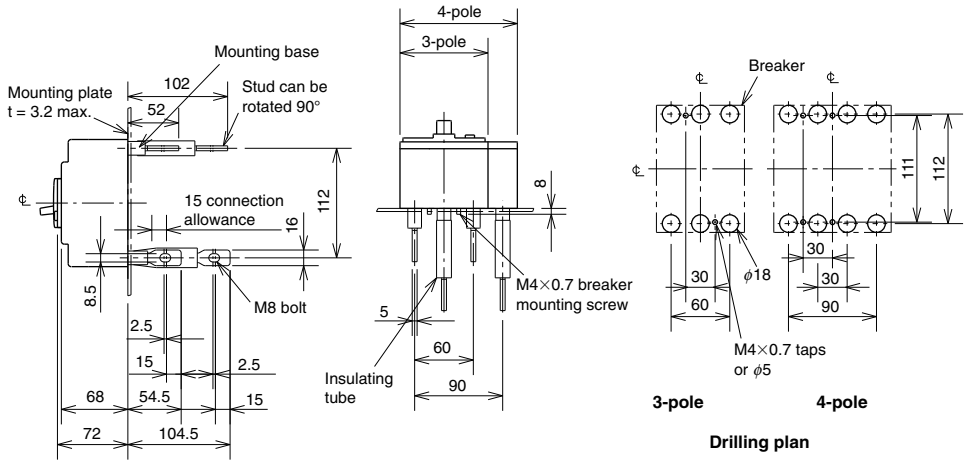

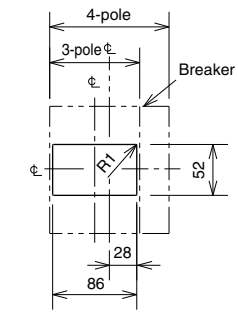

Front-panel cutout

Plug-in

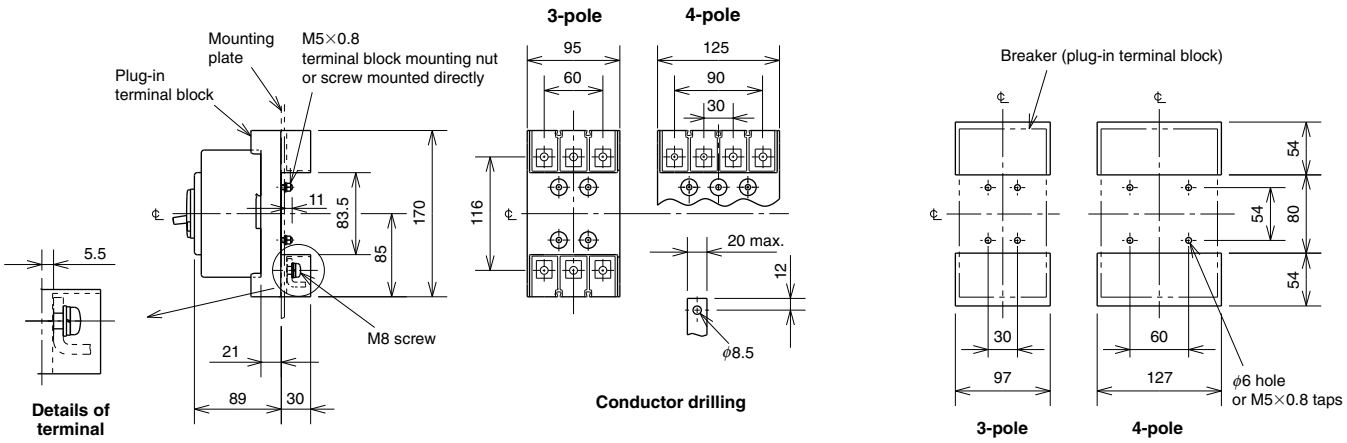

Remark: 1. Only 3-pole models are available for NV125-CV.

NV250-CV
NV250-SV
NV250-HV

NV250-CV

Model				NV250-CV	NV250-SV		NV250-HV	
Rated current In (A)				125 150 175 200 225 250	125 150 175 200 225 250		125 150 175 200 225 250	
Number of poles				3	3	4	3	4
Phase line				3ϕ3W, 1ϕ2W	3ϕ3W, 1ϕ2W	3ϕ4W	3ϕ3W, 1ϕ2W	3ϕ4W
Rated operational voltage Ue (V)			AC	100-440	100-440	200-440	100-440	200-440
High-speed type	Rated current sensitivity (mA)			30 100/200/500 selectable	(30) 100/200/500 selectable		(30) 100/200/500 selectable	
	Max operating time (s)		at IΔn	0.1	0.1		0.1	
			at 5IΔn	0.04	0.04		0.04	
Time-delay type	Rated current sensitivity (mA)			(100/200/500 selectable)	(100/200/500 selectable)		(100/200/500 selectable)	
	Max operating time (s)			(0.45/1.0/2.0 selectable)	(0.45/1.0/2.0 selectable)		(0.45/1.0/2.0 selectable)	
	Inertial operating time (s) (or more)			(0.1/0.5/1.0)	(0.1/0.5/1.0)		(0.1/0.5/1.0)	
Earth-leakage indication system				Mechanical type (button)	Mechanical type (button)		Mechanical type (button)	
Rated short-circuit breaking capacity (kA)	IEC 60947-2 (Icu/Ics)	AC	440V	15/12	36/36		65/65	
			415V	25/19	36/36		70/70	
			400V	25/19	36/36		75/75	
			230V	36/27	85/85		100/100	
			200V	36/27	85/85		100/100	
			100V	36/27	85/85	–	100/100	–
Standard attached parts (Front connection)				Mounting screw: M4×0.7×55 (3P: 2pcs, 4P: 4pcs) Insulation barrier: (3P: 4pcs, 4P: 6pcs)				

Operating Characteristics

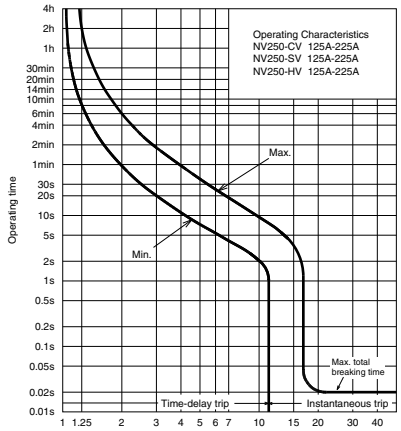

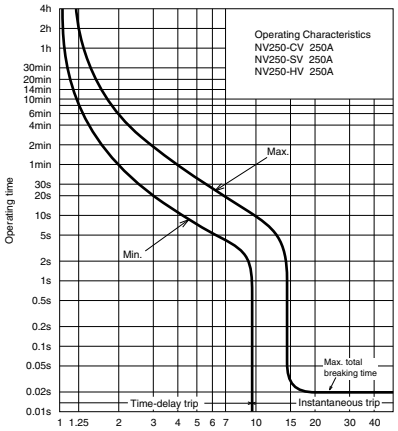

Earth leakage Tripping Characteristics

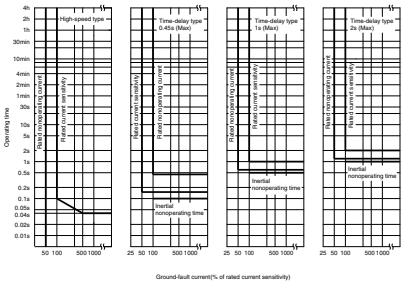

Internal Accessories

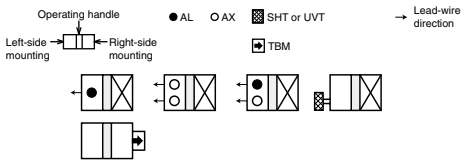

Temperature Compensation Curve

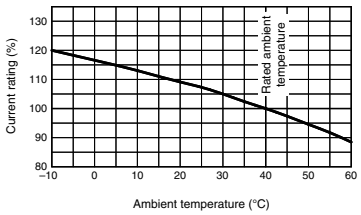

Internal Wiring Diagram

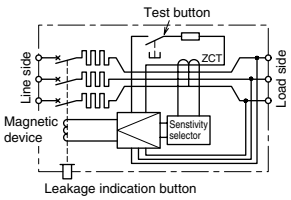

External Accessories

Accessories		Type name	Reference page
Operating handle	F	F-2SV	117
	V	V-2SV	119
Handle lock device	LC	LC-05SV	127
	HL (*1)	HLF-05SV	
		HLN-05SV	
	HL-S	HLS-2SV	

Notes *1 HLF types are used for OFF lock and HLN types for ON lock.
*2 Specify the working voltage. Refer to the reference page for type name.

Accessories				Type name	Reference page
Mechanical interlock		MI	3P	MI-05SV3	129
			4P	MI-2SV4	
Terminal cover	Small	TC-S	3P	TCS-2SV3	121
	Large	TC-L	3P	TCL-2SV3	
				TCL-2SV3L	
			4P	TCL-2SV4	
	Skeleton	TTC	3P	TTC-2SV3	
	Rear	BTC	3P	BTC-2SV3	
	Plug-in	PTC	3P	PTC-2SV3	
Electrical operation device				(*2)	133

Outline Drawing

Front connection

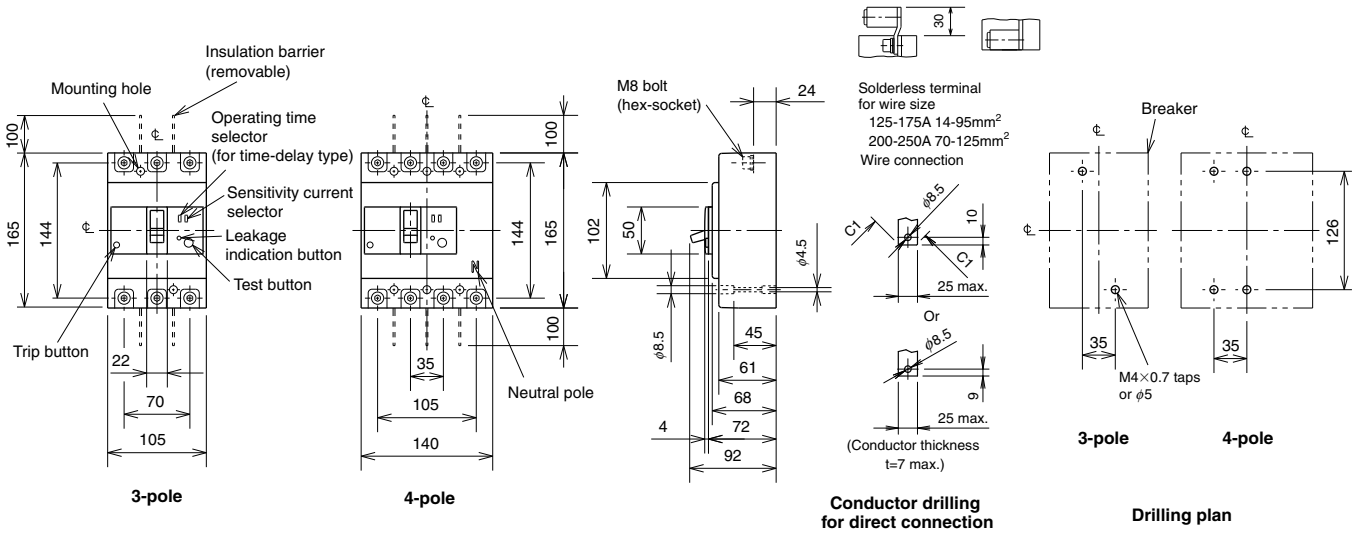

Rear connection

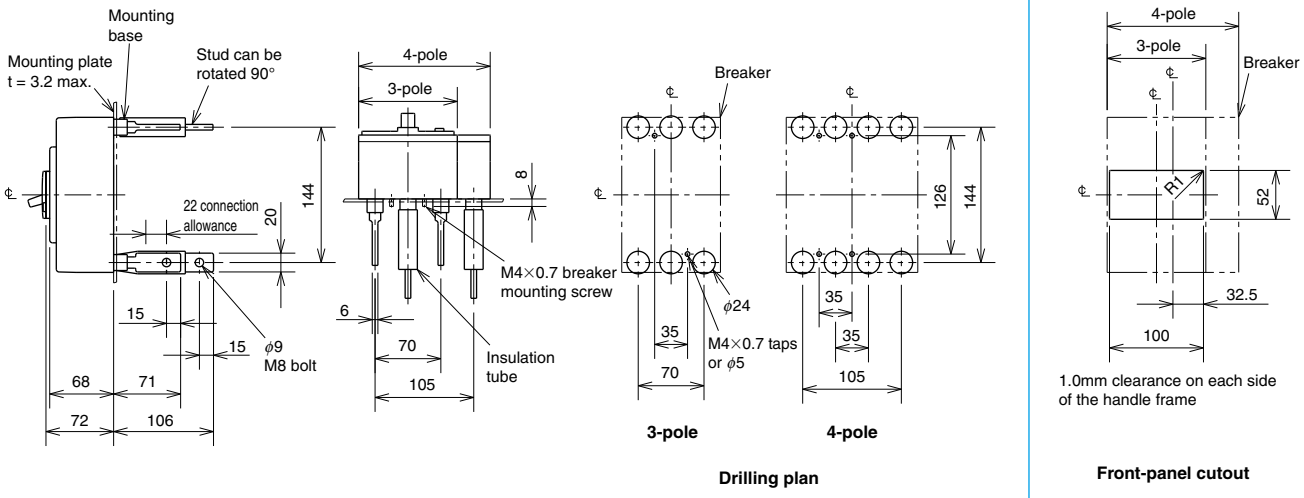

Plug-in

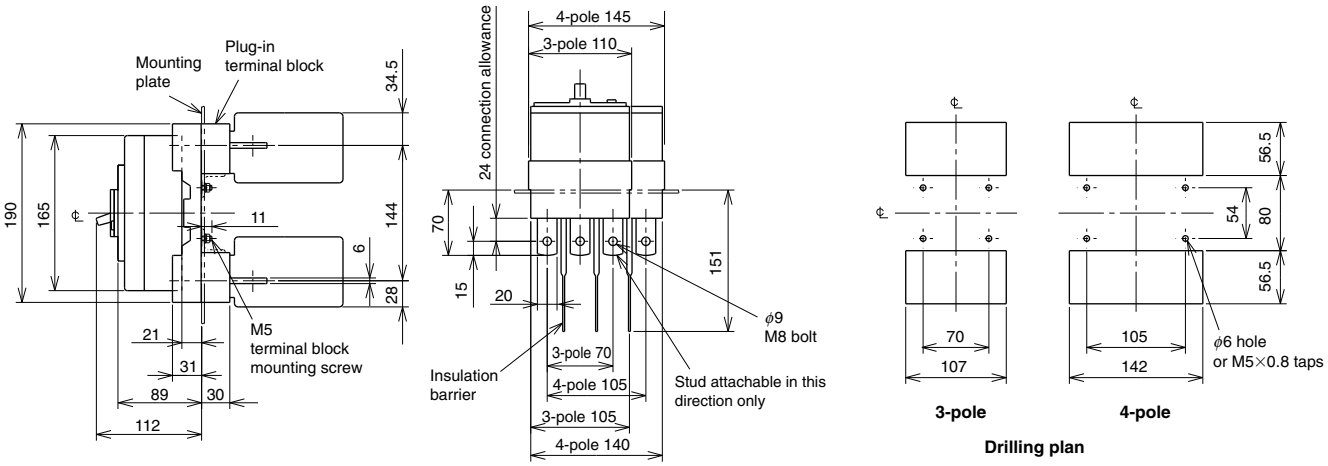

Remark: 1. Only 3-pole models are available for the model of NV250-CV.

NV125-SEV
NV125-HEV
NV250-SEV
NV250-HEV

NV250-SEV

Model				NV125-SEV		NV125-HEV		NV250-SEV	NV250-HEV
Rated current In (A)				125		125		250	250
Current setting Ir (A)				63-125		63-125		125-250	125-250
Number of poles				3	4	3	4	3	3
Phase line type				3φ3W, 1φ2W	3φ4W	3φ3W, 1φ2W	3φ4W	3φ3W, 1φ2W	3φ3W, 1φ2W
Rated operational voltage Ui			V	440		440		440	440
Rated operational voltage Ue (V)			AC	100-440		100-440		100-440	100-440
High-speed type	Rated current sensitivity (mA)			(30) 100/200/500 selectable		(30) 100/200/500 selectable		(30) 100/200/500 selectable	(30) 100/200/500 selectable
	Max operating time (s)		at IΔn	0.1		0.1		0.1	0.1
			at 5IΔn	0.04		0.04		0.04	0.04
Time-delay type	Rated current sensitivity (mA)			(100/200/500 selectable)		(100/200/500 selectable)		(100/200/500 selectable)	(100/200/500 selectable)
	Max operating time (s)			(0.45/1.0/2.0 selectable)		(0.45/1.0/2.0 selectable)		(0.45/1.0/2.0 selectable)	(0.45/1.0/2.0 selectable)
	Inertial operating time (s) (or more)			(0.1/0.5/1.0)		(0.1/0.5/1.0)		(0.1/0.5/1.0)	(0.1/0.5/1.0)
Earth-leakage indication system				Mechanical type (button)		Mechanical type (button)		Mechanical type (button)	Mechanical type (button)
Rated short-circuit breaking capacity (kA)	IEC 60947-2 (Icu/Ics)	AC	440V	36/36		65/65		36/36	65/65
			415V	36/36		70/70		36/36	70/70
			400V	36/36		75/75		36/36	75/75
			230V	85/85		100/100		85/85	100/100
			200V	85/85		100/100		85/85	100/100
			100V	85/85		100/100		85/85	100/100
Standard attached parts (Front connection)				Mounting screw: M4×0.7×55 (3P: 2pcs, 4P: 4pcs) Insulation barrier: (3P: 4pcs, 4P: 6pcs)					

Operating Characteristics

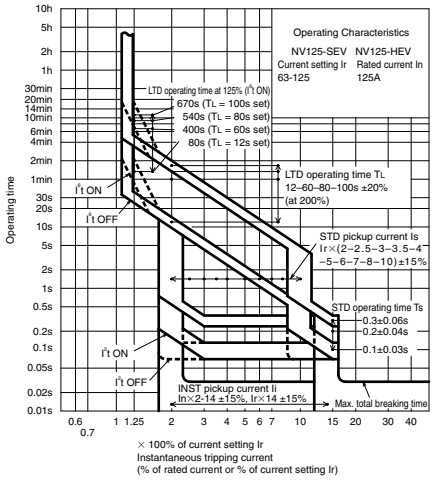

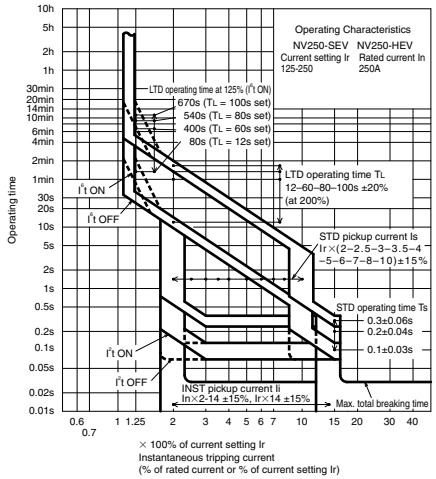

Earth leakage Tripping Characteristics

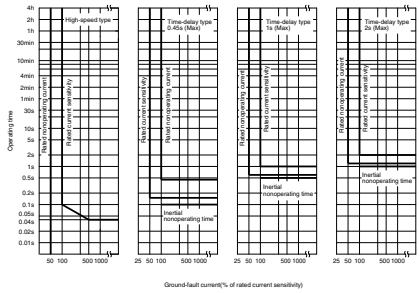

Internal Accessories

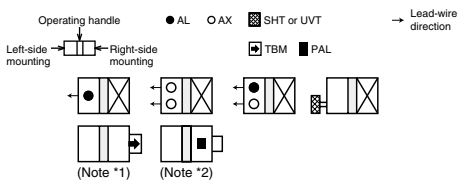

Notes *1 For the 24VDC TBM only instruct us of a control voltage. (The standard shared voltage is 100-240VAC/100-240VDC.)
*2 SLT-equipped is standard. Control voltage (100-200VAC) is necessary.

Current Reducing Curve

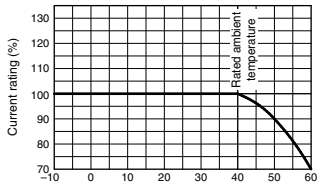

The rated current does not have thermal characteristics. Reduce the current as shown in the curve on the left chart if the ambient temperature exceeds 40°C.

Internal Wiring Diagram

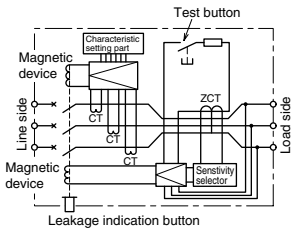

External Accessories

Accessories		Type name	Reference page
Operating handle	F	F-2SV	117
	V	V-2SV	119
Handle lock device	LC	LC-05SV	127
	HL (*1)	HLF-05SV	
		HLN-05SV	
	HL-S	HLS-2SV	

Notes *1 HLF types are used for OFF lock and HLN types for ON lock.
*2 Specify the working voltage. Refer to the reference page for type name.

Accessories				Type name	Reference page
Mechanical interlock		MI	3P	MI-05SV3	129
			4P	MI-2SV4	
Terminal cover	Small	TC-S	3P	TCS-2SV3	121
	Large	TC-L	3P	TCL-2SV3	
				TCL-2SV3L	
			4P	TCL-2SV4	
	Skeleton	TTC	3P	TTC-2SV3	
	Rear	BTC	3P	BTC-2SV3	
	Plug-in	PTC	3P	PTC-2SV3	
Electrical operation device				(*2)	133

Outline Drawing

Front connection

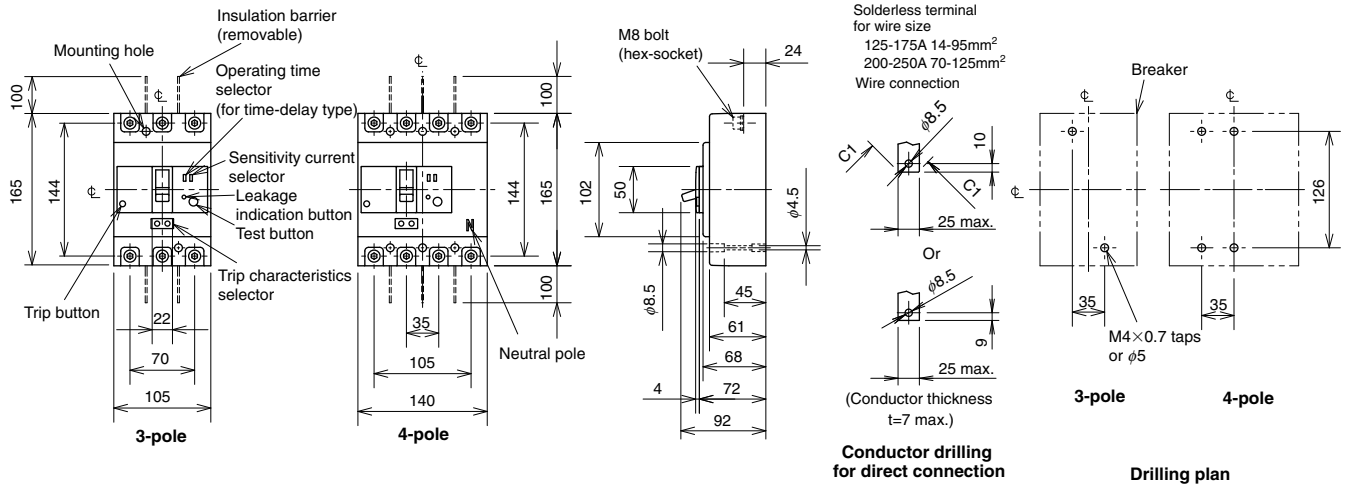

Rear connection

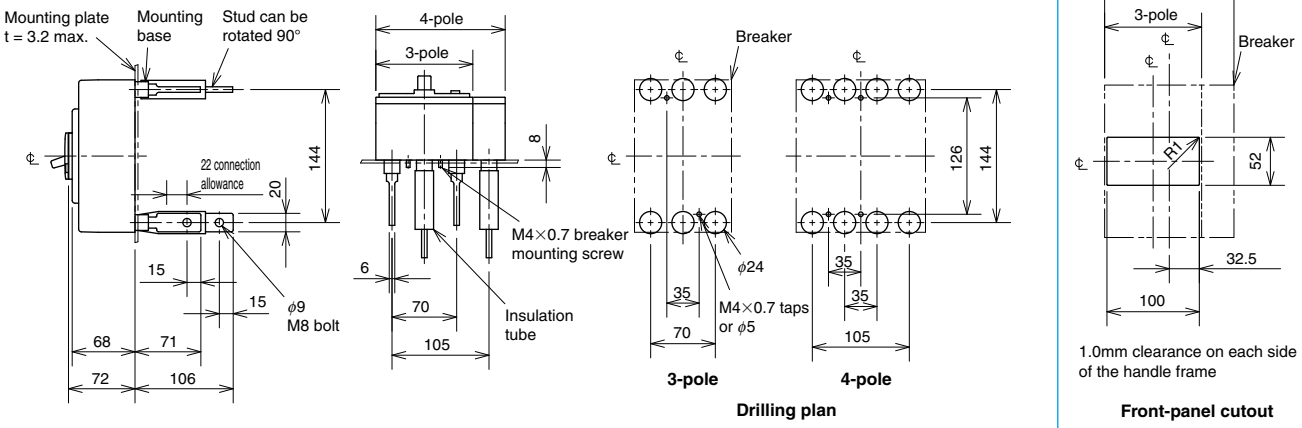

Plug-in

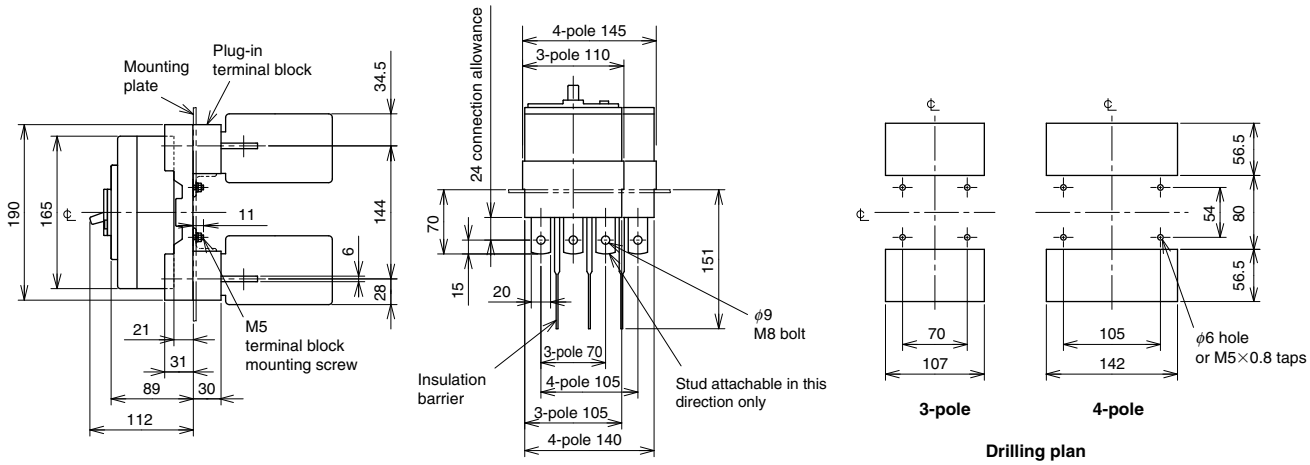

Remark: 1. Only 3-pole models are available for the model of NV250-SEV and NV250-HEV.

NV400-CW
NV400-SW

NV400-SW

Model			NV400-CW	NV400-SW
Number of poles			3	
Rated operational voltage Ue (V AC) (*1)			100-440 Multi-voltage type	
Rated current In (A)			250 300 350 400	
High-speed type	Rated current sensitivity IΔn (mA)		(30) 100 · 200 · 500 Selectable	
	Max. operating time at 5IΔn (s)		0.04	
Time-delay type	Rated current sensitivity IΔn (mA)		(100 · 200 · 500 Selectable)	
	Max. operating time at 2IΔn (s)		(0.45 · 1.0 · 2.0 Selectable)	
	Inertial non-operating time at 2IΔn (s)		(0.1 · 0.5 · 1.0)	
Earth-leakage indication system			Button	
Rated short-circuit breaking capacity (kA) IEC 60947-2 (Icu/Ics) EN 60947-2	AC	440V	25/13	42/42
		400V	36/18	45/45
		230V	50/25	85/85
Standard attached parts (Front connection)			Mounting screw: M6×60 (4pcs) Insulation barrier: (4pcs)	

Note *1 Rated operational voltage of time-delay type is for 200-440V.

Operating Characteristics

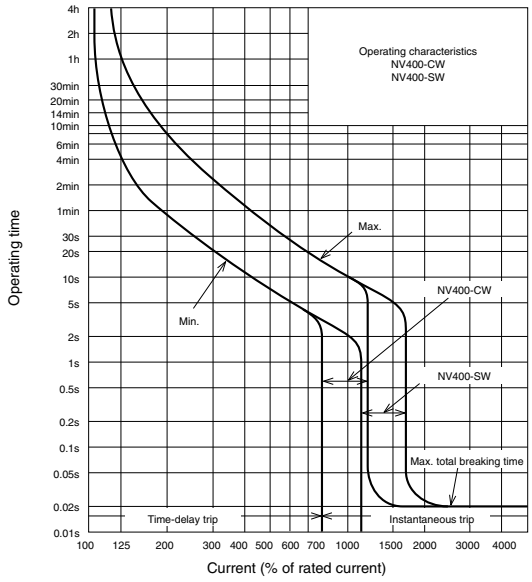

Earth Leakage Tripping Characteristics

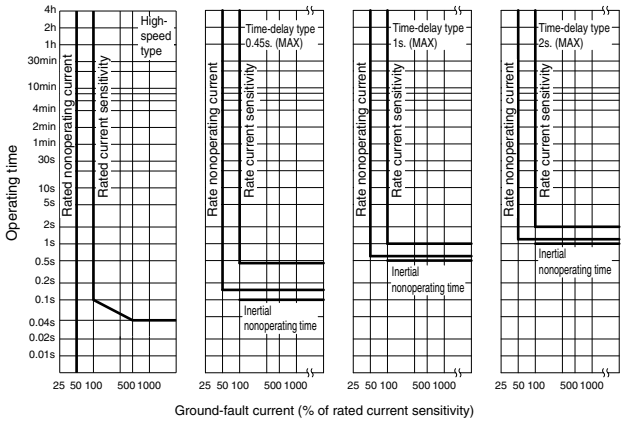

Internal Accessories

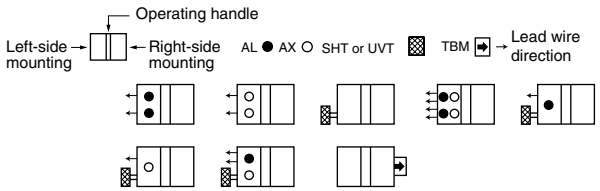

Remark: 1. Refer to page 105.

Temperature Compensation Curve

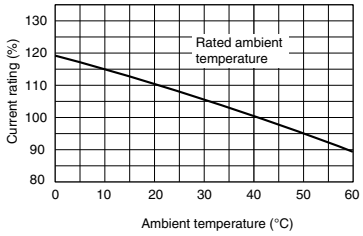

External Accessories

Accessories		Type name	Reference page
Operating handle	F	F-4S	117
	V	V-4S	119
Mechanical interlock	MI	MI-4SW3	129

Accessories			Type name	Reference page
Auxiliary handle		HT	HT-4CW, HT-4SW	128
Terminal cover	Large	TC-L	TCL-4SW3	121
	Skeleton	TTC	TTC-4SW3	
	Rear	BTC	BTC-4SW3	
Handle lock device		HL	HL-4CW, HL-4SW	127
		HL-S	HLS-4SW	
Electrical operation device			(*1)	133

Note *1 Specify the operation method and voltage. Order in combination with the breaker unit.

Internal Wiring Diagram

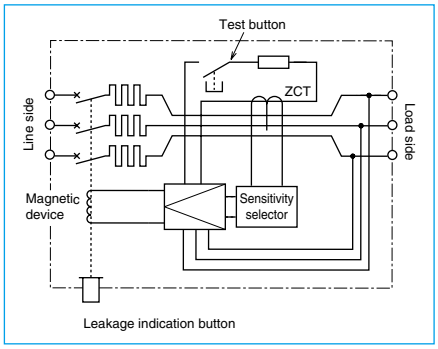

Outline Drawing

Front connection

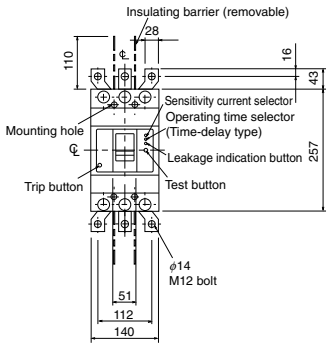

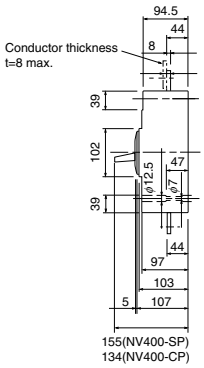

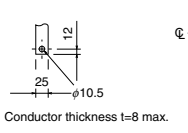

Conductor drilling for direct connection

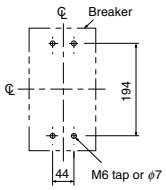

Drilling plan

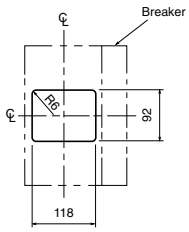

1.0mm clearance on each side of the handle frame.

Front-panel cutout

Rear connection

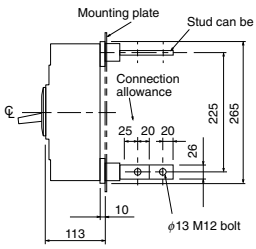

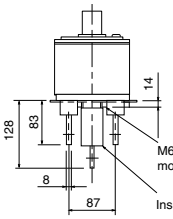

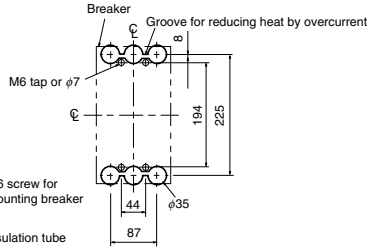

Drilling plan

Boring dimensions for rear connection type barriers (3-pole)

Line side

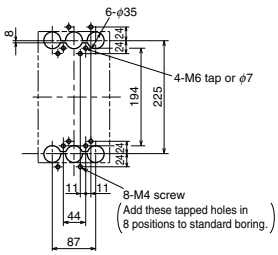

Load side

Note The bore dimensional drawing shows the breaker viewed from the rear.

NV400-SEW
NV400-HEW
NV400-REW

NV400-SEW

Model			NV400-SEW		NV400-HEW		NV400-REW
Number of poles			3	4	3	4	3
Rated operational voltage Ue (V AC) (*1)			100-440 Multi-voltage type				
Rated current In (A)			200-400 adjustable				
High-speed type	Rated current sensitivity IΔn (mA)		(30) 100 · 200 · 500 Selectable				
	Max. operating time at 5IΔn (s)		0.04				
Time-delay type	Rated current sensitivity IΔn (mA)		(100 · 200 · 500 Selectable)				
	Max. operating time at 5IΔn (s)		(0.45 · 1.0 · 2.0 Selectable)				
	Max. inertial non-operating time at 2IΔn (s)		(0.1 · 0.5 · 1.0)				
Earth-leakage indication system			Button				
Rated short-circuit breaking capacity (kA) IEC 60947-2 (Icu/Ics) EN 60947-2	AC	440V	42/42		65/65		125/63
		400V	50/50		70/70		125/63
		230V	85/85		100/100		150/75
Standard attached parts (Front connection)			Mounting screw: M6×72 (4pcs) Insulation barrier: (3P: 4pcs, 4P: 6pcs)				

Note *1 Rated operational voltage of time-delay type is for 200-440V.

Operating Characteristics

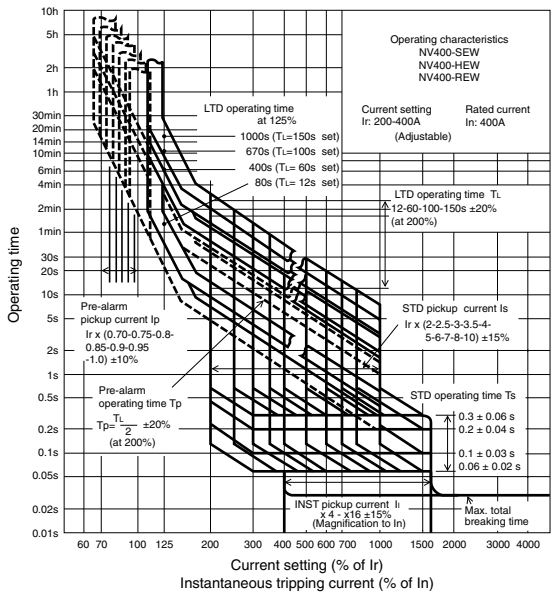

Earth Leakage Tripping Characteristics

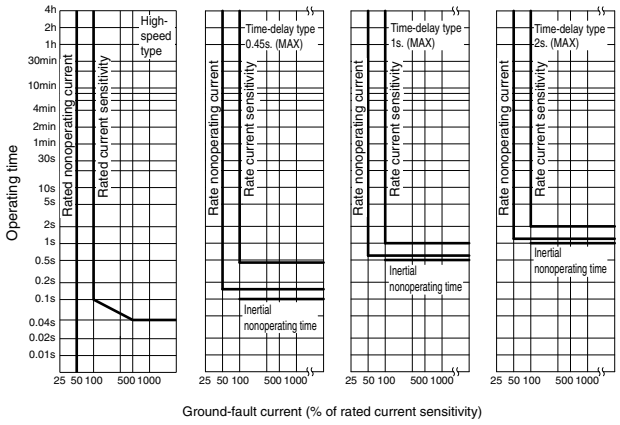

Internal Accessories

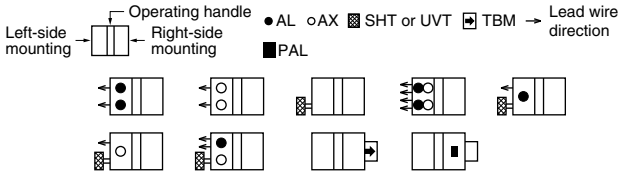

Remarks: 1. Instead of TBM, pre-alarm module (PAL) can be attached.
2. Refer to page 105.

Current Reducing Curve

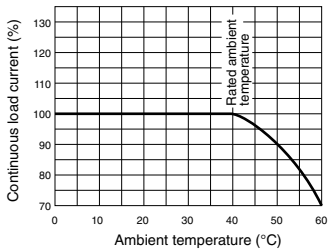

External Accessories

Accessories			Type name	Reference page
Operating handle	F		F-4S	117
	V		V-4S	119
Mechanical interlock	MI	3P	MI-4SW3	129
		4P	MI-4SW4	

Notes *1 This is for NV400-SEW.
*2 This is for NV400-SEW. For rear terminal cover of NV400-HEW/REW, use PTC-4SW3.
*3 Specify the operation method and voltage. Order in combination with the breaker unit.

Accessories				Type name	Reference page
Auxiliary handle		HT		HT-4SW	128
Terminal cover	Large	TC-L	3P	TCL-4SW3 (*1)	121
			4P	TCL-4SW4 (*1)	
	Skeleton	TTC	3P	TTC-4SW3	
			4P	TTC-4SW4	
	Rear	BTC	3P	BTC-4SW3 (*2)	
			4P	BTC-4SW4	
Handle lock device		HL		HL-4SW	127
		HL-S		HLS-4SW	
Electrical operation device		NVM	3P	(*3)	133
			4P		

Internal Wiring Diagram

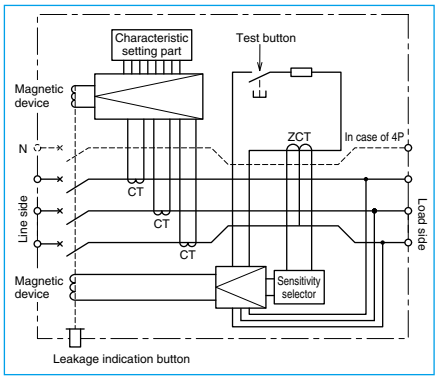

Outline Drawing

Front connection

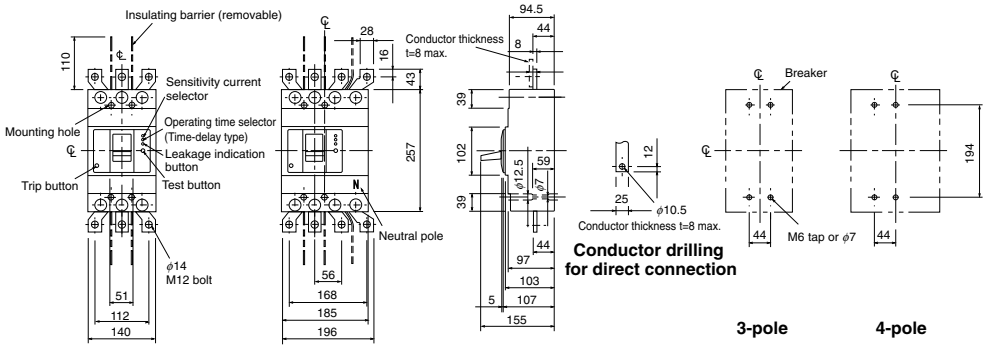

3-pole 4-pole

Conductor drilling for direct connection

3-pole 4-pole

Drilling plan

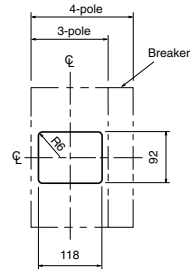

1.0mm clearance on each side of the handle frame.

Front-panel cutout

Rear connection

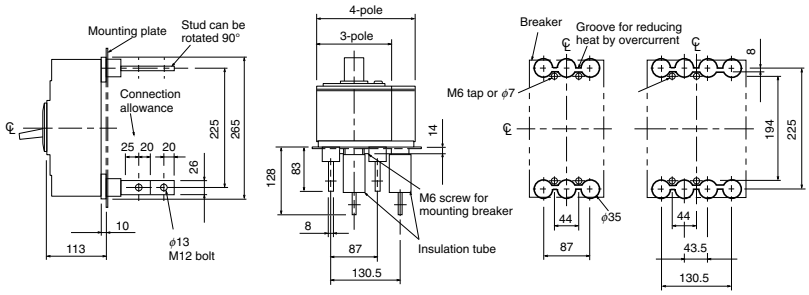

3-pole 4-pole

Drilling plan

Boring dimensions for rear connection type barriers (3-pole)

Line side

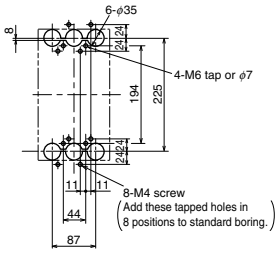

Load side

Note The bore dimensional drawing shows the breaker viewed from the rear.

NV630-CW
NV630-SW

NV630-SW

Model			NV630-CW	NV630-SW
Number of poles			3	
Rated operational voltage Ue (V AC)			100-440 Multi-voltage type	
Rated current In (A)			500 600 630	
High-speed type	Rated current sensitivity IΔn (mA)		–	
	Max. operating time at 5IΔn (s)		–	
Time-delay type	Rated current sensitivity IΔn (mA)		100 · 200 · 500 Selectable	
	Max. operating time at 5IΔn (s)		0.45 · 1.0 · 2.0 Selectable	
	Max. inertial non-operating time at 2IΔn (s)		0.1 · 0.5 · 1.0	
Earth-leakage indication system			Button	
Rated short-circuit breaking capacity (kA) IEC 60947-2 (Icu/Ics) EN 60947-2	AC	440V	36/18	42/42
		400V	36/18	50/50
		230V	50/25	85/85
Standard attached parts (Front connection)			Mounting screw: M6×72 (4pcs) Insulation barrier: (4pcs)	

Operating Characteristics

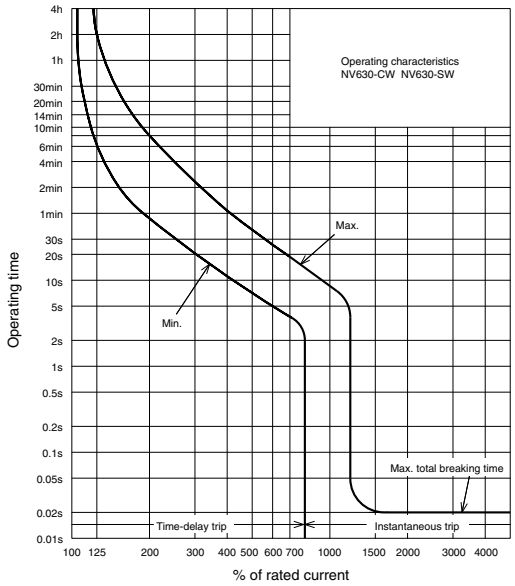

Earth Leakage Tripping Characteristics

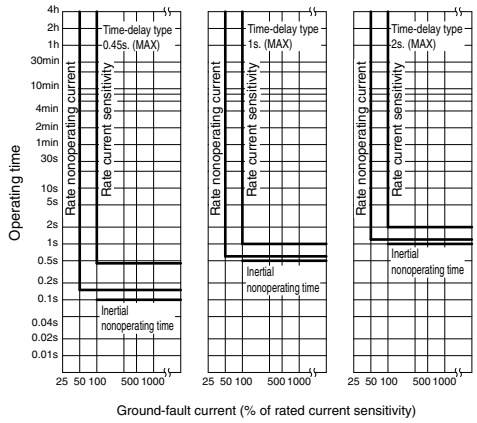

Internal Accessories

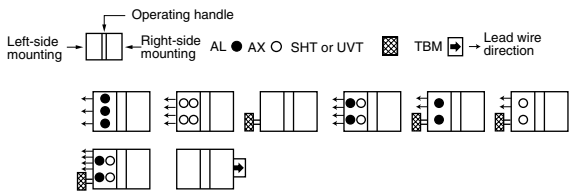

Remark: 1. Refer to page 105.

Temperature Compensation Curve

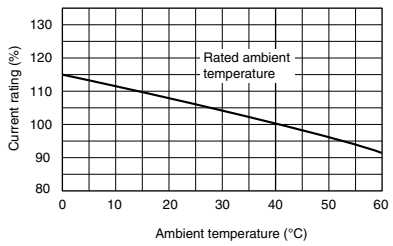

External Accessories

Accessories		Type name	Reference page
Operating handle	F	F-4S	117
	V	V-4S	119
Mechanical interlock	MI	MI-4SW3	129

Accessories			Type name	Reference page
Auxiliary handle		HT	HT-4SW	128
Terminal cover	Large	TC-L	TCL-4SW3	121
	Skeleton	TTC	TTC-4SW3	
	Rear	BTC	BTC-4SW3	
Handle lock device		HL	HL-4SW	127
		HL-S	HLS-4SW	
Electrical operation device			(*1)	133

Note *1 Specify the operation method and voltage. Order in combination with the breaker unit.

Internal Wiring Diagram

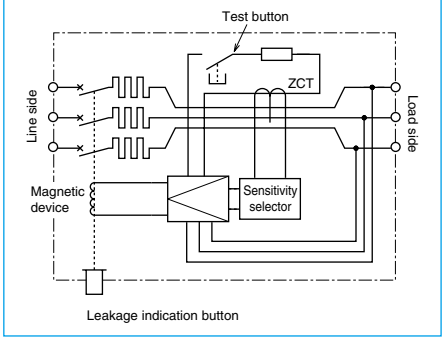

Outline Drawing

Front connection

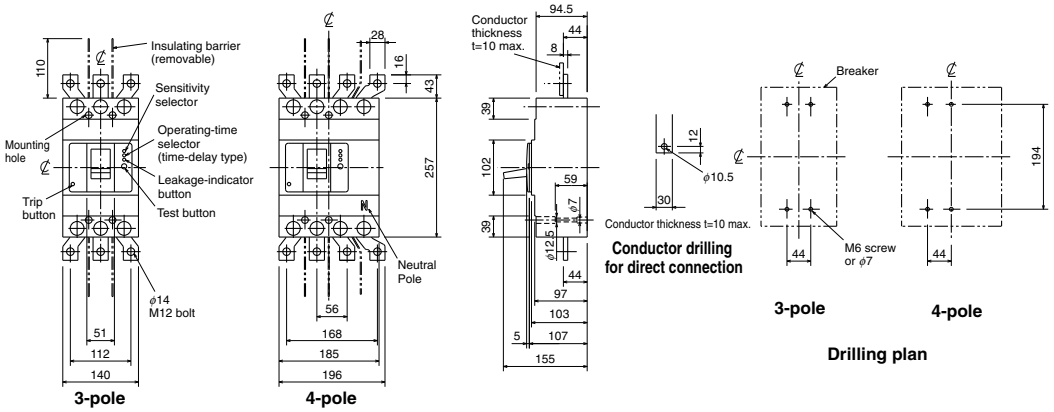

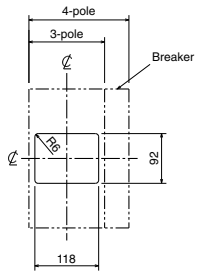

Front-plate cutout

Rear connection

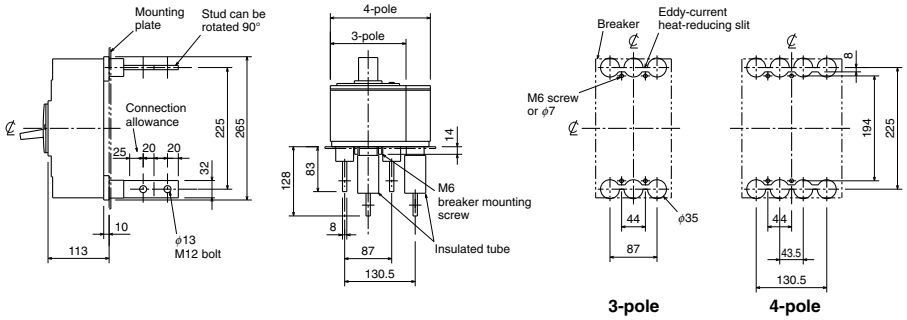

Boring dimensions for rear connection type barriers (3-pole)

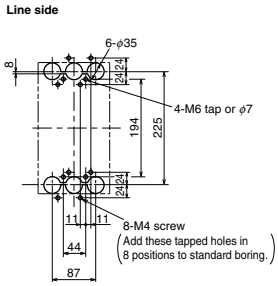

Note The bore dimensional drawing shows the breaker viewed from the rear.

NV630-SEW
NV630-HEW

NV630-SEW

Model			NV630-SEW		NV630-HEW
Number of poles			3	4	3
Rated operational voltage Ue (V AC) (*1)			100-440 Multi-voltage type		
Rated current In (A)			300-630 adjustable		
High-speed type	Rated current sensitivity IΔn (mA)		–		
	Max. operating time at 5IΔn (s)		–		
Time-delay type	Rated current sensitivity IΔn (mA)		(100 · 200 · 500 Selectable)		
	Max. operating time at 5IΔn (s)		(0.45 · 1.0 · 2.0 Selectable)		
	Max. inertial non-operating time at 2IΔn (s)		(0.1 · 0.5 · 1.0)		
Earth-leakage indication system			Button		
Rated short-circuit breaking capacity (kA) IEC 60947-2 (Icu/Ics) EN 60947-2	AC	440V	42/42		65/65
		400V	50/50		70/70
		230V	85/85		100/100
Standard attached parts (Front connection)			Mounting screw: M6×72 (4pcs) Insulation barrier: (3P: 4pcs, 4P: 6pcs)		

Note *1 Rated operational voltage of time-delay type is for 200-440V.

Operating Characteristics

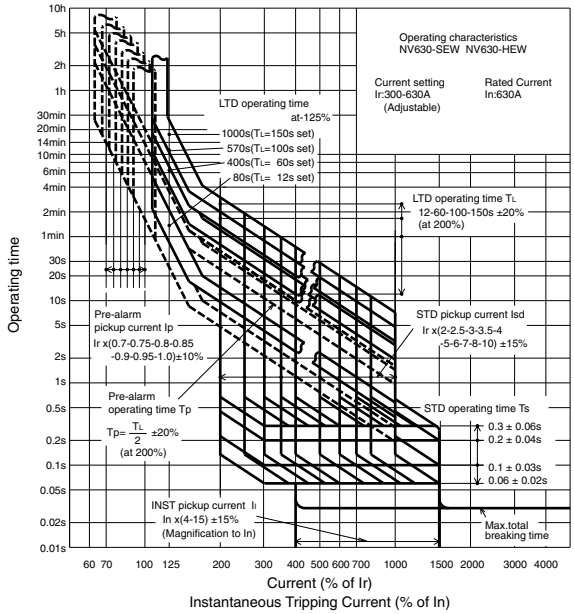

Earth Leakage Tripping Characteristics

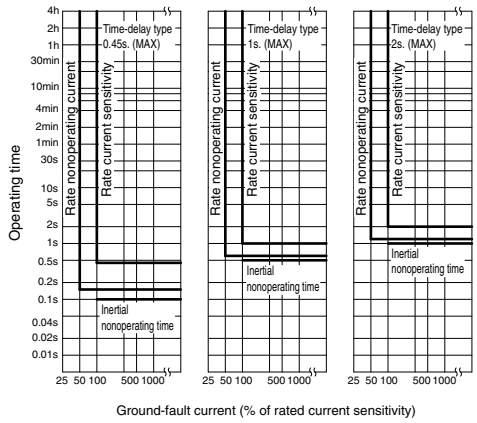

Internal Accessories

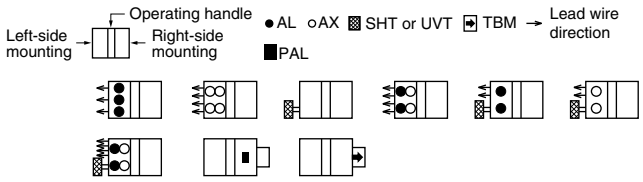

Remarks: 1. Instead of TBM, pre-alarm module (PAL) can be attached.
2. Refer to page 105.

Current Reducing Curve

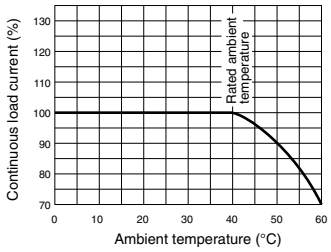

External Accessories

Accessories			Type name	Reference page
Operating handle	F		F-4S	117
	V		V-4S	119
Mechanical interlock	MI	3P	MI-4SW3	129
		4P	MI-4SW4	

Notes *1 This is for NV630-SEW.
*2 This is for NV630-SEW. For rear terminal cover of NV630-HEW, use PTC-4SW3.
*3 Specify the operation method and voltage. Order in combination with the breaker unit.

Accessories				Type name	Reference page
Auxiliary handle		HT		HT-4SW	128
Terminal cover	Large	TC-L	3P	TCL-4SW3 (*1)	121
			4P	TCL-4SW4 (*1)	
	Skeleton	TTC	3P	TTC-4SW3	
			4P	TTC-4SW4	
	Rear	BTC	3P	BTC-4SW3 (*2)	
			4P	BTC-4SW4	
Handle lock device		HL		HL-4SW	127
		HL-S		HLS-4SW	
Electrical operation device		NVM	3P	(*3)	133
			4P		

Internal Wiring Diagram

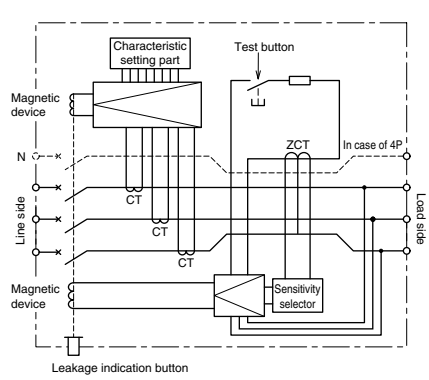

Outline Drawing

Front connection

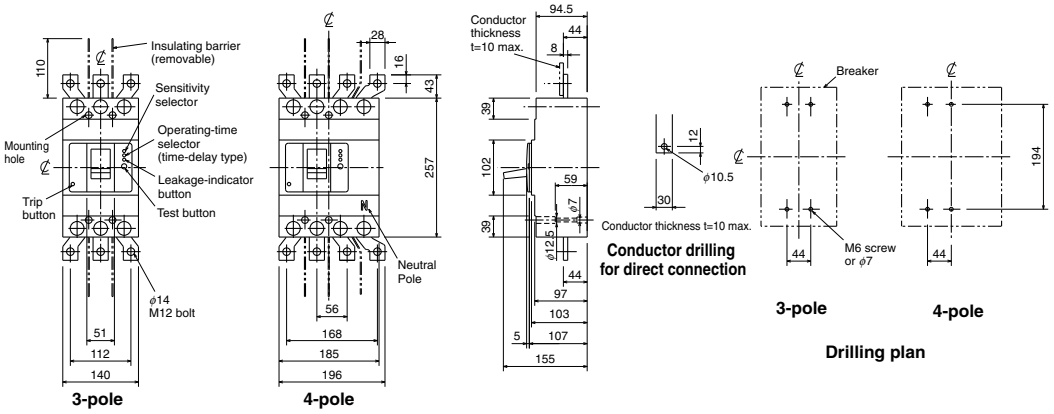

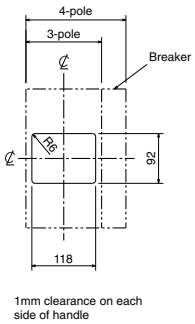

Rear connection

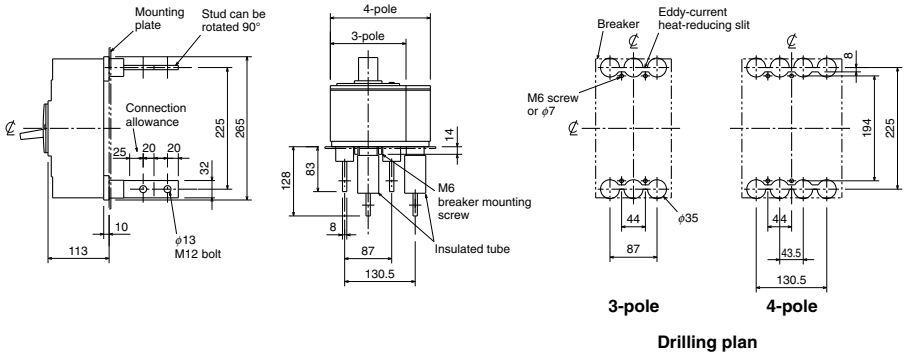

Boring dimensions for rear connection type barriers (3-pole)

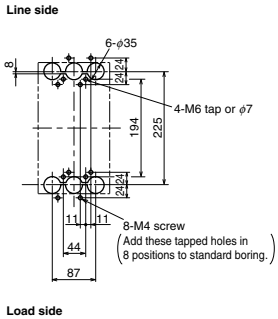

Note The bore dimensional drawing shows the breaker viewed from the rear.

NV800-SEW
NV800-HEW

NV800-SEW

Model			NV800-SEW	NV800-HEW
Number of poles			3	
Rated operational voltage Ue (V AC)			100-440 Multi-voltage type	
Rated current In (A)			400-800 adjustable	
High-speed type	Rated current sensitivity IΔn (mA)		–	
	Max. operating time at 5IΔn (s)		–	
Time-delay type	Rated current sensitivity IΔn (mA)		100 · 200 · 500 Selectable	
	Max. operating time at 5IΔn (s)		0.45 · 1.0 · 2.0 Selectable	
	Max. inertial non-operating time at 2IΔn (s)		0.1 · 0.5 · 1.0	
Earth-leakage indication system			Button	
Rated short-circuit breaking capacity (kA) IEC 60947-2 (Icu/Ics) EN 60947-2	AC	440V	42/42	65/65
		400V	50/50	70/70
		230V	85/85	100/100
Standard attached parts (Front connection)			Mounting screw: M6×35 (4pcs) Insulation barrier: (2pcs)	

Operating Characteristics

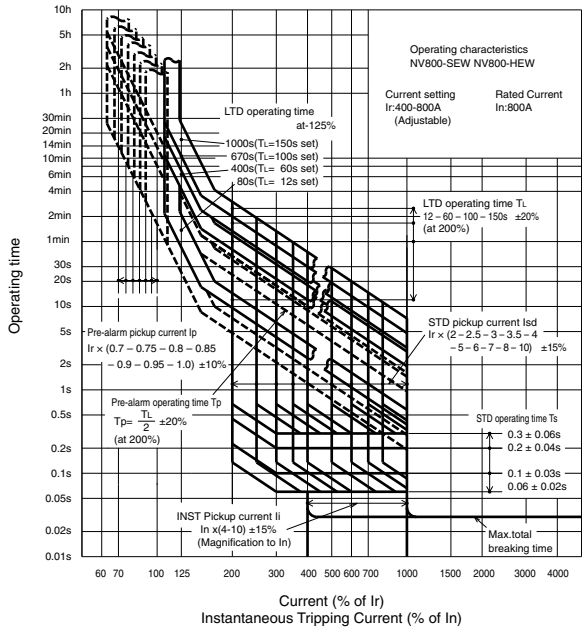

Earth Leakage Tripping Characteristics

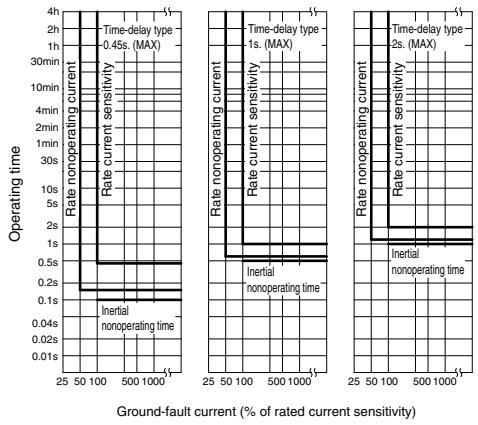

Internal Accessories

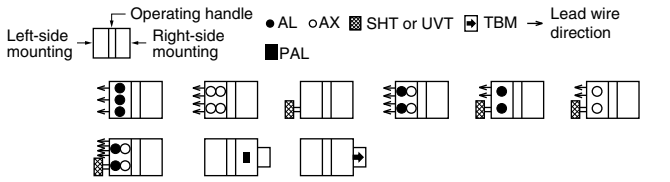

Remarks: 1. Instead of TBM, pre-alarm module (PAL) or trip indicator (TI) can be attached.
2. Refer to page 105.

Current Reducing Curve

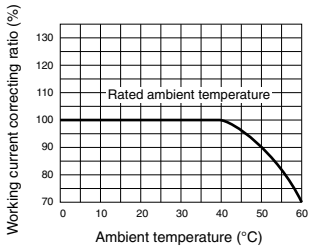

External Accessories

Accessories		Type name	Reference page
Operating handle	F	F-8S	117
	V	V-8S	119
Mechanical interlock	MI	MI-8SW3	129

Accessories			Type name	Reference page
Auxiliary handle		HT	HT-4SW	128
Terminal cover	Large	TC-L	TCL-8SW3	121
	Skeleton	TTC	TTC-8SW3	
	Rear	BTC	BTC-8SW3	
Handle lock device		HL	HL-4SW	127
		HL-S	HLS-8SW	
Electrical operation device			(*1)	133

Note *1 Specify the operation method and voltage. Order in combination with the breaker unit.

Internal Wiring Diagram

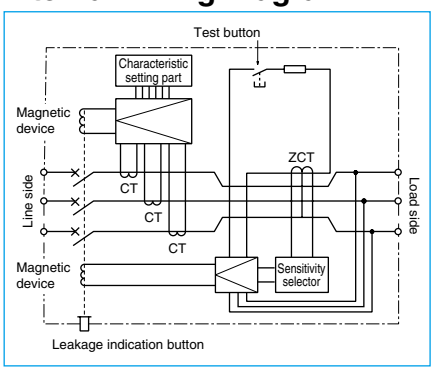

Outline Drawing

Front connection

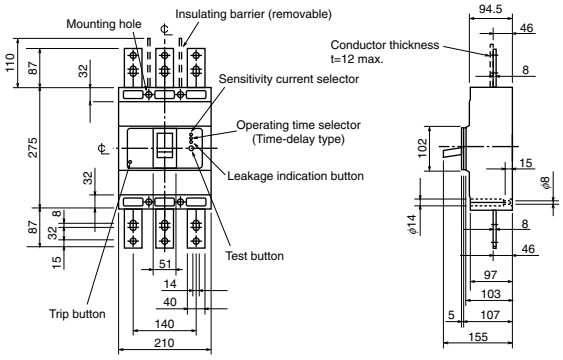

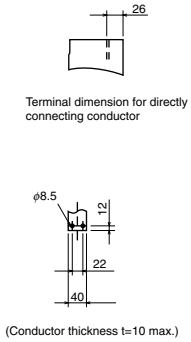

Conductor drilling for direct connection

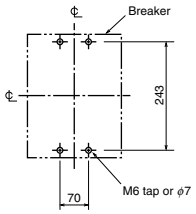

Drilling plan

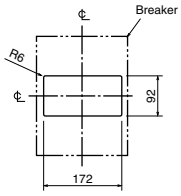

1.0mm clearance on each side of the handle frame.

Front-panel cutout

Rear connection

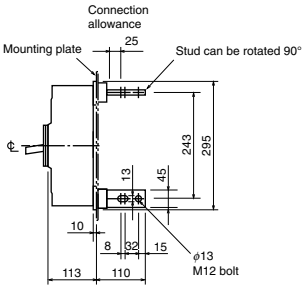

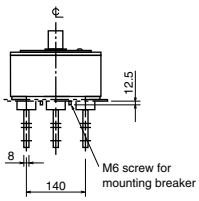

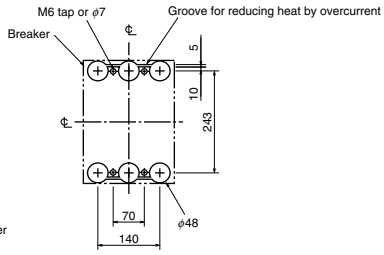

Drilling plan

Boring dimensions for rear connection type barriers (3-pole)

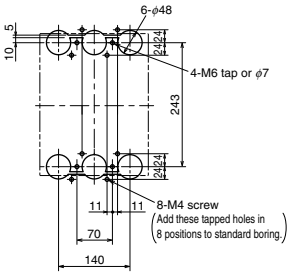

Note The bore dimensional drawing shows the breaker viewed from the rear.

NF50-SVFU
NV50-SVFU

NV50-SVFU

Model				NF50-SVFU		Model				NV50-SVFU	
Rated current In (A) Rated ambient temperature 40°C				(3) 5 10 15 20 30 40 50		Rated current In (A) Rated ambient temperature 40°C				(5) (10) 15 20 30 40 50	
						Number of poles				2	3
Number of poles				2	3	Phase line				1φ2W	3φ3W 1φ2W
Rated short-circuit breaking capacity (kA)	UL 489 CSA C22.2 No.5-02	Rated voltage VAC		240		Rated voltage VAC	UL 489			120-240	
		AC	600Y/347V	–			IEC 60947-2 EN 60947-2			100-240	100-440
			480V	–							
			480Y/277V	–		High-speed type	Rated current sensitivity IΔn mA			30 50	30 50 100
			240V	14			Pick-up current UL 1053			75% of IΔn	
			120V	–			Operating time (sec) within AT 5IΔn			0.04 (*1)	
	IEC 60947-2 EN 60947-2 (Icu/Ics)	Rated insulation voltage Ui V		440		Earth-leakage indication system				Indicator window	
		AC	690V	–		Rated short-circuit breaking capacity (kA)	UL 489 CSA C22.2 No.5-02	AC	480V	–	
			500V	–					240V	14	
			440V	7.5/4					120V	14	
			415V	10/5			IEC 60947-2 EN 60947-2 (Icu/Ics)	AC	440V	–	7.5/4
			400V	10/5					400V	–	10/5
			380V	10/5					230V	15/8	15/8
			230V	15/8					100V	15/8	15/8
Standard attached parts (Front connection)				IEC35 rail mounting claws							

Note *1 0.1 for UL1053.
Remark: 1. The mounting screws must be prepared by the user. (Recommended size: M4×0.7×65 (2 pcs).)

Operating Characteristics

(The CE and CCC characteristics are noted differently. Contact us for more information.)

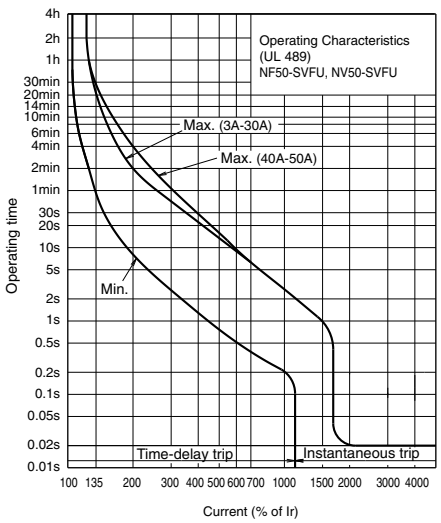

Earth Leakage Tripping Characteristics

(The CE and CCC characteristics are noted differently. Contact us for more information.)

NV50-SVFU
(UL 1053)

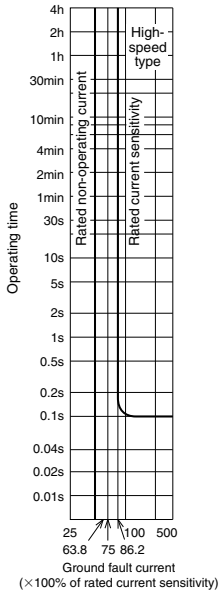

Internal Accessories

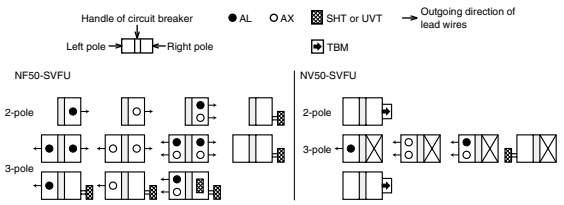

Temperature Compensation Curve

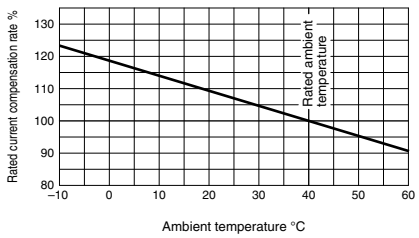

Internal Wiring Diagram

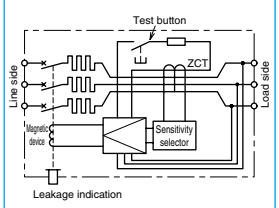

External Accessories

Accessories			Type name	Reference page	Accessories				Type name	Reference page
Operating handle	F	2P	F-03SVUL2	117	Terminal cover	Large	TC-L	2P	TCL-03SVU2	121
		3P	F-03SVUL					3P	TCL-03SVU3	
	V	2P	V-03SVUL2	119						
		3P	V-03SVUL							
Handle lock device	HL		HLF-03SVU	127						
	HL-S		HLS-03SVU							

Outline Drawing

Front connection

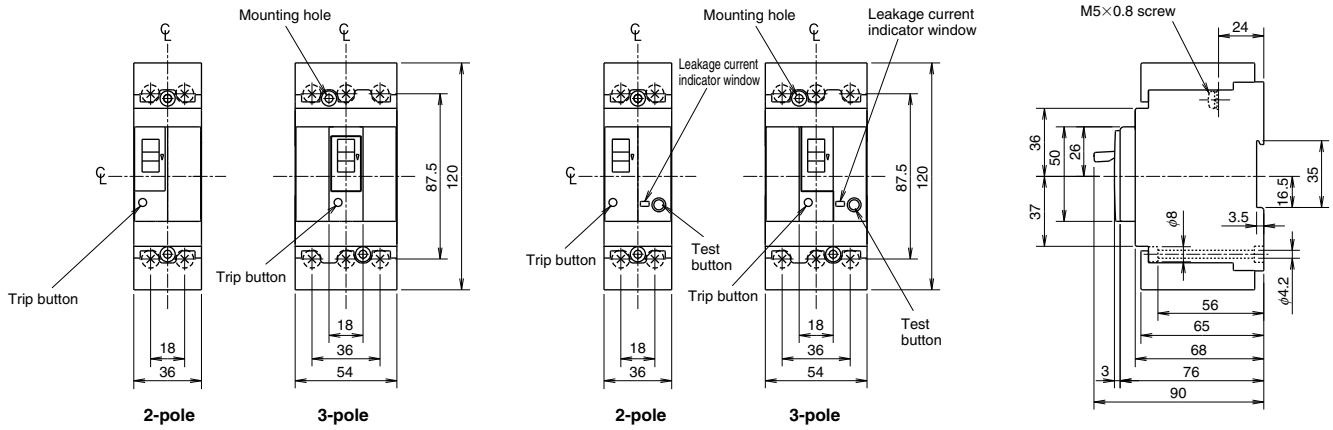

(NF50-SVFU) (NV50-SVFU)

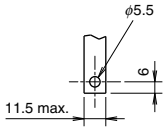

(Conductor thickness t=4 max.)

Conductor drilling for direct connection

Remarks: 1. The mounting screws are not enclosed with the breaker.
2. The wires cannot be connected directly.

Compatible crimp terminals Tightening torque 22lb-in (2.5N·m)

Applicable wire range (*1)		Crimp terminal type (*2)	
mm²	AWG (#) (60°C/75°C)	JST	NTM
1.04-2.63	16-14	R2-5 2-M5 V2-5 V2-M5	R2-5 R2-5M
2.63-4.6	12	-	R3.5-5S R3.5-5L
2.63-6.64	12-10	R5.5-5 V5.5-5	R5.5-5 R5.5-5S R5.5-5N
6.64-10.52	8	R8-5	R8-5 R8-5S
10.52-16.78	6	R14-5 14-NK5	R14-5 R14-5S
16.78-26.66	4	22-S5 22-S6	R22-5S

JST: Japan Solderless Terminal Mfg. Co.
NTM: Nichifu Co., Ltd.
Notes *1 14AWG or lager to comply with UL Standards.
*2 When using with a wire connection, use the crimp terminal combination shown above.

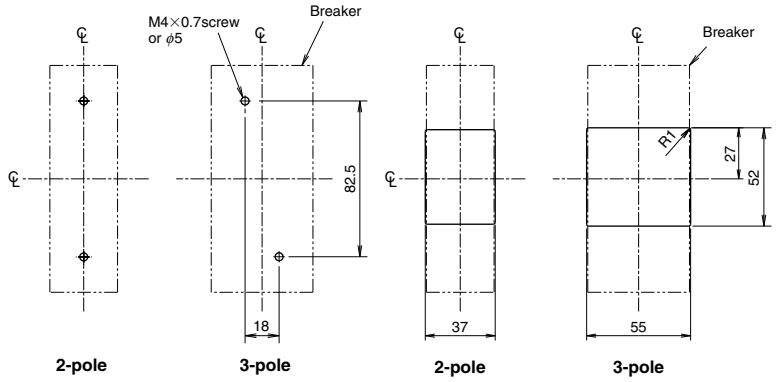

The drilling dimensions have a 1.0 mm clearance on each side of breaker window frame.

Drilling plan **Front panel drilling plan**

NF100-CVFU
NV100-CVFU

NF100-CVFU

Model				NF100-CVFU		Model				NV100-CVFU
Rated current In (A) Rated ambient temperature 40°C				60 (70) 75 (80) (90) 100		Rated current In (A) Rated ambient temperature 40°C				60 (70) 75 (80) (90) 100
						Number of poles				3
						Phase line				3φ3W 1φ2W
Number of poles				2	3	Rated voltage VAC		UL 489		120-240
Rated short-circuit breaking capacity (kA)	UL 489 CSA C22.2 No.5-02	Rated voltage VAC		240				IEC 60947-2 EN 60947-2		100-440
		AC	600Y/347V	–		High-speed type	Rated current sensitivity IΔn mA			30/50/ 100/200/500 selectable
			480V	–			Pick-up current UL 1053			75% of IΔn
			480Y/277V	–			Operating time (sec) within AT 5IΔn			0.04 (*1)
			240V	14						
			120V	–						
	IEC 60947-2 EN 60947-2 (Icu/Ics)	Rated insulation voltage Ui V		600		Earth-leakage indication system				Mechanical button
		AC	690V	–		Rated short-circuit breaking capacity (kA)	UL 489 CSA C22.2 No.5-02	AC	480V	–
			500V	7.5/4					240V	14
			440V	10/5					120V	14
			415V	10/5			IEC 60947-2 EN 60947-2 (Icu/Ics)	AC	440V	10/5
			400V	10/5					400V	10/5
			380V	10/5					230V	15/8
			230V	15/8					100V	15/8
Standard attached parts (Front connection)				IEC35 rail mounting claws, Insulating barrier (2P: 2pcs, 3P: 4pcs) (Only for type with bar terminal) Mounting screw M4×0.7×55 (2 screws)						

Note *1 0.1 for UL1053.

Operating Characteristics

(The CE and CCC characteristics are noted differently. Contact us for more information.)

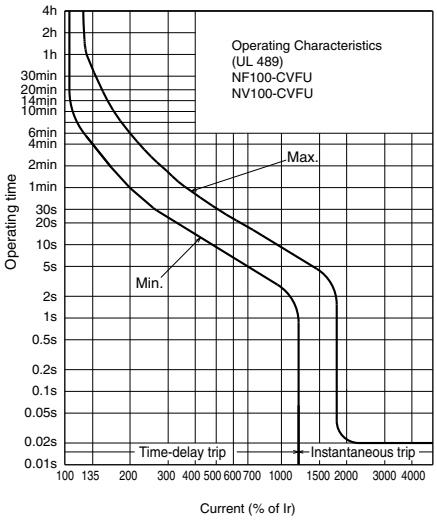

Earth Leakage Tripping Characteristics

(The CE and CCC characteristics are noted differently. Contact us for more information.)

NV100-CVFU
(UL 1053)

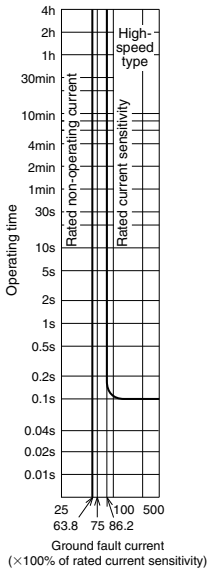

Internal Accessories

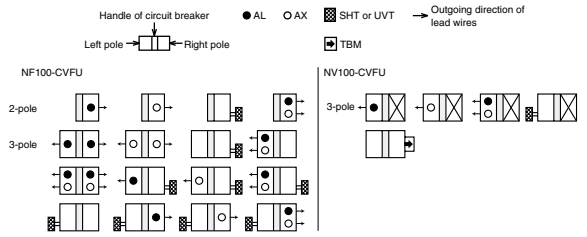

Temperature Compensation Curve

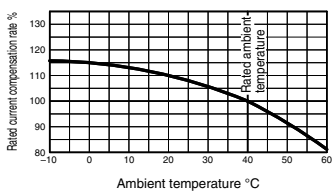

Internal Wiring Diagram

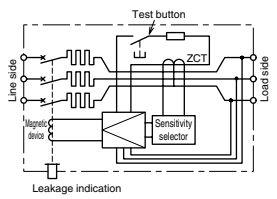

External Accessories

Accessories			Type name	Reference page	Accessories				Type name	Reference page
Operating handle	F	2P	F-05SVUL2	117	Terminal cover	Large	TC-L	2P	TCL-05SVU2	121
		3P	F-05SVUL						TCL-05SVU2L	
	V	2P	V-05SVUL2	119				3P	TCL-05SVU3	
		3P	V-05SVUL						TCL-05SVU3L	
Handle lock device	HL		HLF-05SVU	127						
	HL-S	2P	HLS-05SVU2							
		3P	HLS-05SVU							

Outline Drawing

Front connection

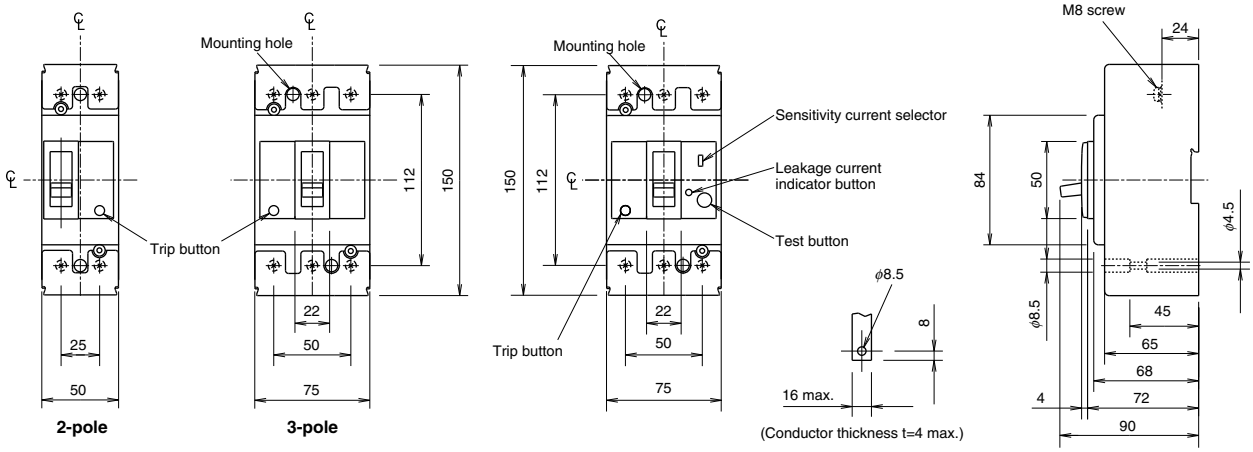

Conductor drilling for direct connection

Compatible crimp terminals Tightening torque 54lb-in (6N-m)

Applicable wire range		Crimp terminal type (*1)	
mm²	AWG (#) (60°C/75°C)	JST	NTM
2.5-2.63	14	R2-8	R2-8
2.63-6.64	12-10	R5.5-8	R5.5-8
6.64-10.52	8	R8-8	R8-8
10.52-16.78	6	R14-8	R14-8 R14-8S
16.78-26.66	4	R22-8	R22-8S
26.66-42.42	2	38-S8	R38-8S
42.42-60.57	1/0	60-2BA 60-S8	CB60-8

JST: Japan Solderless Terminal Mfg. Co.
NTM: Nichifu Co., Ltd.
Note *1 When using with a wire connection, use the crimp terminal combination shown above.

Front connection(solderless terminal)

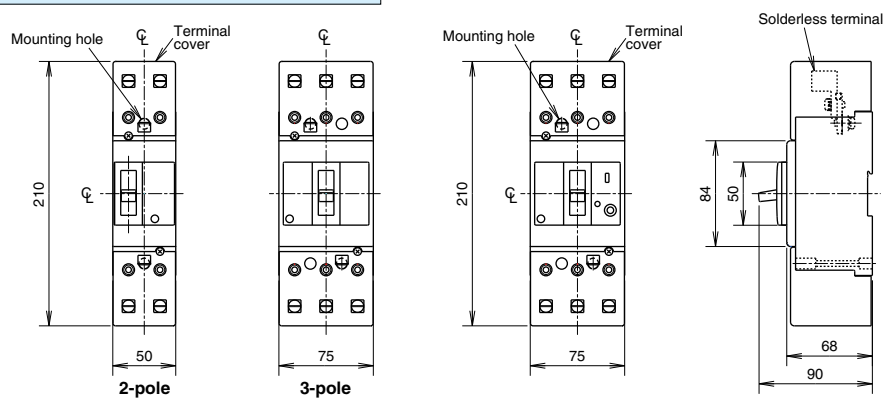

Size of screwdriver with bolting
Please bolt with flat head screwdriver.
The length of X : 6mm-7mm
The length of Y ≦ 9.5mm

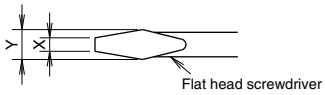

Wire size 60°C/75°C CU ONLY	Number of strands
14AWG	7
12-10AWG	7
8AWG	7
6-4AWG	7
2AWG	7
1-1/0AWG	19

The tightening torque is different according to connected wire.
Refer to instruction manual for details.
Remark: Periodical retightening prevents overheating by the setting of twisted strands or the stress of heating and cooling.

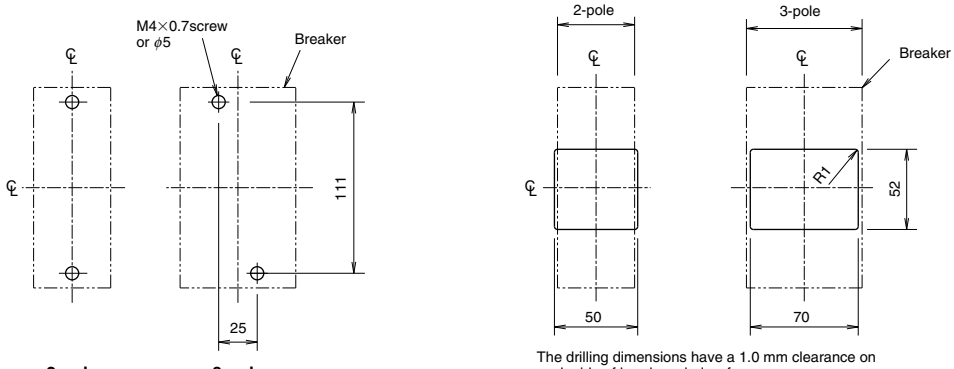

Drilling plan

The drilling dimensions have a 1.0 mm clearance on each side of breaker window frame.

Front panel drilling plan

NF125-SVU
NF125-HVU
NV125-SVU
NV125-HVU

NF125-HVU

Model				NF125-SVU		NF125-HVU	
Rated current In (A) Rated ambient temperature 40°C				15 20 30 40 50 60 (70) 75 (80) (90) 100	125	15 20 30 40 50 60 (70) 75 (80) (90) 100	125
Number of poles				2 3	2 3	3	3
Rated short-circuit breaking capacity (kA)	UL 489 CSA C22.2 No.5-02	Rated voltage VAC		480	480	600Y/347V	600Y/347V
		AC	600Y/347V	–	–	18	18
			480V	30	30	50	50
			240V	50	50	100	100
			120V	–	–	–	–
	IEC 60947-2 EN 60947-2 (Icu/Ics)	Rated insulation voltage Ui V		690	690	690	690
		AC	690V	8/4	8/4	10/5	10/5
			500V	18/9	18/9	25/13	25/13
			440V	30/15	30/15	50/25	50/25
			415V	30/15	30/15	50/25	50/25
			400V	30/15	30/15	50/25	50/25
			380V	30/15	30/15	50/25	50/25
			230V	50/25	50/25	100/50	100/50
Standard attached parts (Front connection)				Mounting screw M4×0.7×55 (2 screws), Insulating barrier (2P: 2pcs, 3P: 4pcs)			

Model				NV125-SVU		NV125-HVU	
Rated current In (A) Rated ambient temperature 40°C				15 20 30 (40) 50 60 75 100	125	15 20 30 (40) 50 60 75 100	125
Number of poles				3	3	3	3
Phase line				3φ3W 1φ2W	3φ3W 1φ2W	3φ3W 1φ2W	3φ3W 1φ2W
Rated voltage VAC	UL 489			120-480	120-480	120-480	120-480
	IEC 60947-2 EN 60947-2			100-440	100-440	100-440	100-440
High-speed type	Rated current sensitivity IΔn mA			30/50/ 100/200/500 selectable	30/50/ 100/200/500 selectable	30/50/ 100/200/500 selectable	30/50/ 100/200/500 selectable
	Pick-up current UL 1053			75% of IΔn	75% of IΔn	75% of IΔn	75% of IΔn
	Operating time (sec) within AT 5IΔn			0.04 (*1)	0.04 (*1)	0.04 (*1)	0.04 (*1)
Earth-leakage indication system				Mechanical button	Mechanical button	Mechanical button	Mechanical button
Rated short-circuit breaking capacity (kA)	UL 489 CSA C22.2 No.5-02	AC	480V	30	30	50	50
			240V	50	50	100	100
			120V	50	50	100	100
	IEC 60947-2 EN 60947-2 (Icu/Ics)	AC	440V	30/15	30/15	50/25	50/25
			400V	30/15	30/15	50/25	50/25
			230V	50/25	50/25	100/50	100/50
			100V	50/25	50/25	100/50	100/50

Note *1 0.1 for UL1053.

Operating Characteristics (The CE and CCC characteristics are noted differently. Contact us for more information.)

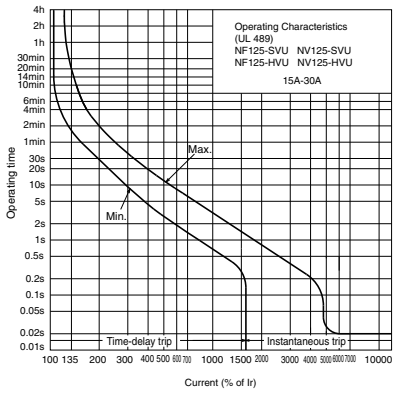

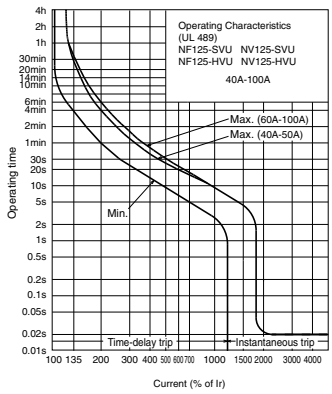

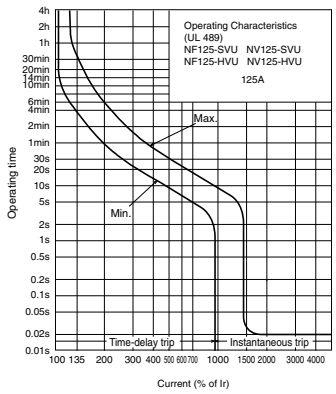

Earth Leakage Tripping Characteristics

(The CE and CCC characteristics are noted differently. Contact us for more information.)

NV125-SVU
NV125-HVU
(UL 1053)

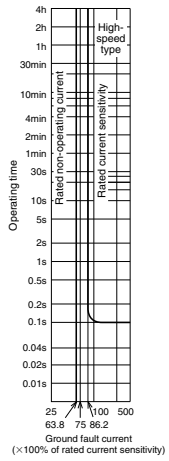

Internal Accessories

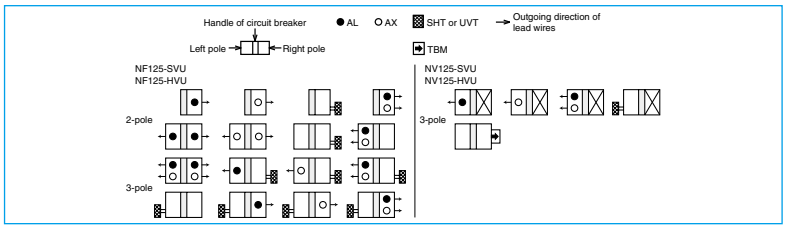

Temperature Compensation Curve

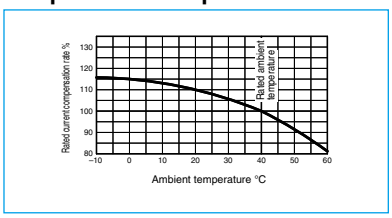

Internal Wiring Diagram

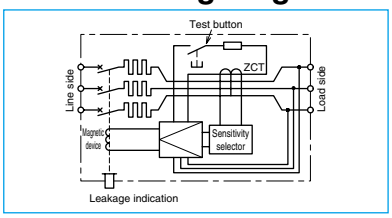

External Accessories

Accessories		Type name	Reference page
Operating handle	F	F-1SVUL	117
	V	V-1SVUL	119
Handle lock device	HL	HLF-05SVU	127
	HL-S	HLS-05SVU	

Accessories			Type name	Reference page
Terminal cover	Large	TC-L	TCL-1SVU3	121

Outline Drawing

Front connection

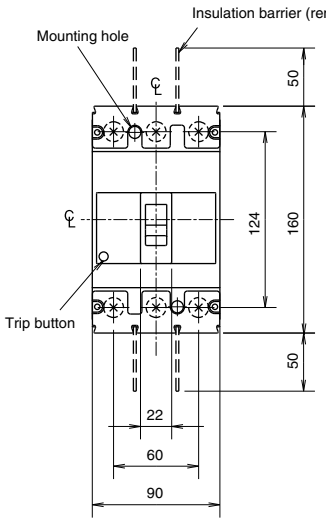

(NF125-SVU, NF125-HVU)

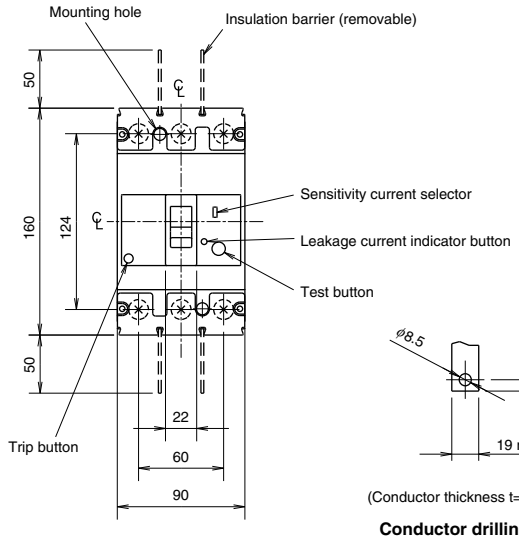

(NV125-SVU, NV125-HVU)

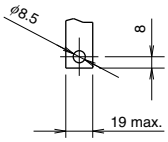

(Conductor thickness t=4 max.)

Conductor drilling for direct connection

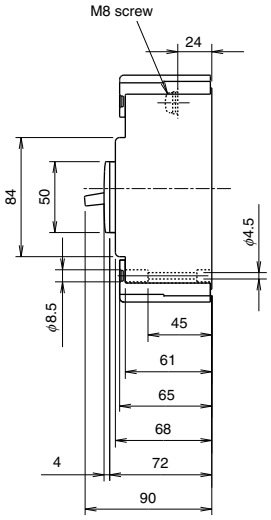

Compatible crimp terminals Tightening torque 54lb·in (6N·m)

Applicable wire range		Crimp terminal type (*1)	
mm²	AWG (#) (60°C/75°C)	JST	NTM
2.5-2.63	14	R2-8	R2-8
2.63-6.64	12-10	R5.5-8	R5.5-8
6.64-10.52	8	R8-8	R8-8
10.52-16.78	6	R14-8	R14-8 R14-8S
16.78-26.66	4	R22-8	R22-8S
26.66-42.42	2	38-S8	R38-8S
42.42-60.57	1/0	60-2BA 60-S8	CB60-8

JST: Japan Solderless Terminal Mfg. Co.
NTM: Nichifu Co., Ltd.
Note *1 When using with a wire connection, use the crimp terminal combination shown above.

Front connection (solderless terminal)

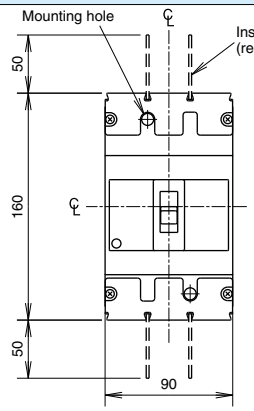

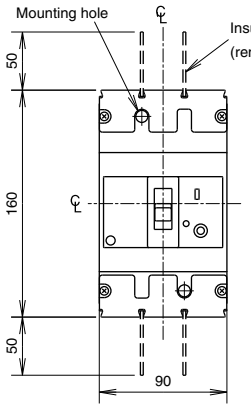

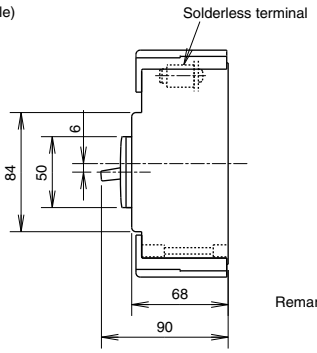

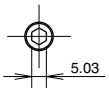

Wire size 60°C/75°C CU ONLY	Number of strands
14AWG	[a] 7
12-10AWG	[a] 7
8AWG	7
6AWG	7
4-2AWG	7
1AWG	19

The tightening torque is different according to connected wire.
Refer to instruction manual for details.
a:Solid copper wire is usable.
Remark: Periodical retightening prevents overheating by the setting of twisted strands or the stress of heating and cooling.

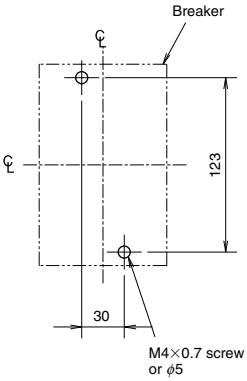

Drilling plan

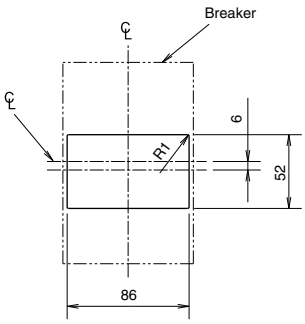

The drilling dimensions have a 1.0 mm clearance on each side of breaker window frame.

Front panel drilling plan

Remark: 1. 2-pole models are 3-pole with the central pole conductor removed.

NF225-CWU

NF225-CWU

Model				NF225-CWU
Rated current In (A) at ambient temperature 40˚C (IEC30˚C)				125 150 175 200 225
Number of poles				3
Rated short-circuit breaking capacities (kA)	UL 489	Rated voltage (VAC)		240
		AC	240V	35
	IEC 60947-2 (Icu/Ics)	Rated insulation voltage Ui (V)		600
		AC	500V	10/5
			440V	15/8
			400V	18/9
			230V	35/18
		DC	250V	10/5 (*1)
Standard attached parts				Mounting screw: M4×0.7×55 (2pcs), Insulation barrier: (4pcs), Terminal cover: (1 set) (*2)

Notes *1 Use either two poles. When wired as shown at the bottom of page 32, the models can be used for up to 400 V DC.
*2 The standard configuration contains a protection cover and adopts the IP20 (finger protection) structure.

Operating Characteristics

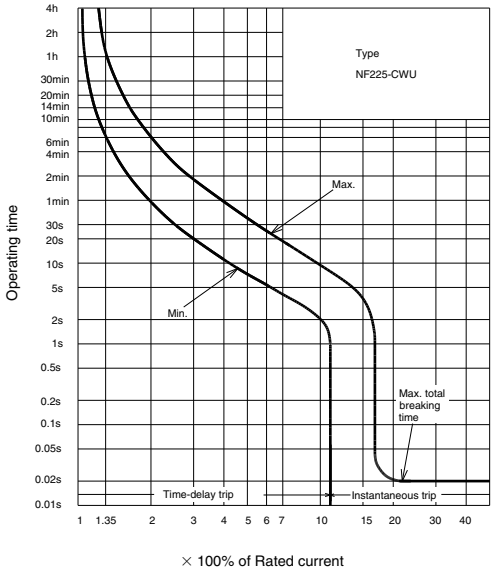

Internal Accessories

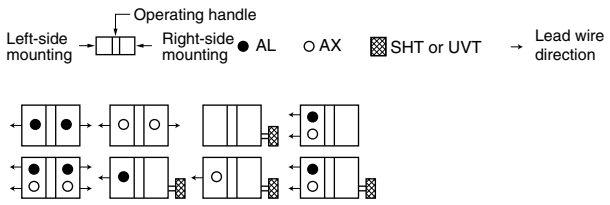

Temperature Compensation Curve

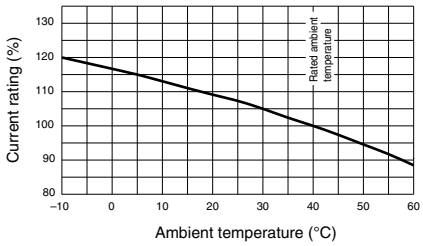

External Accessories

Accessories		Type name	Reference page	Accessories			Type name	Reference page
Operating handle	F	F-2SUL	117	Mechanical interlock		MI	MI-05SWU3	129
	V	V-2SUL	119	Terminal cover	Large	TC-L	TCL-2SWU3 TCL-2SWU3L	121
Handle lock device	HL	HLF-2SWU	127					

Outline Drawing

Front connection

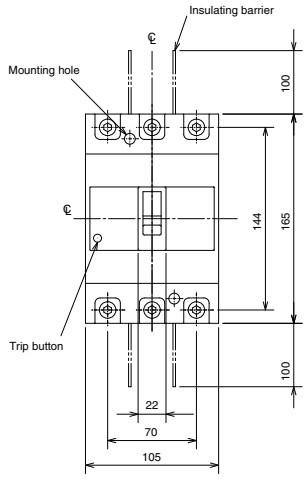

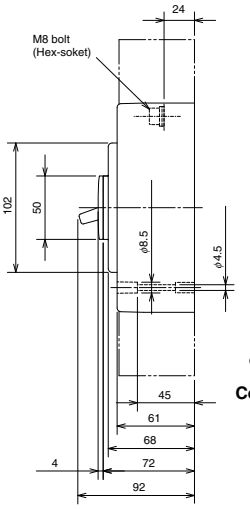

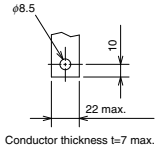

Conductor drilling for direct connection

Compatible crimp terminals Tightening torque 90lb-in (10N.m)

Applicable wire range		Crimp terminal type (*1)	
mm^2	AWG (#) (60°C/75°C)	JST	NTM
16.78-26.66	4	R22-8 22-S8	R22-8 R22-8S CB22-8S
26.66-42.42	2	R38-8 38-S8	R38-8 R38-8S
42.42-60.57	1/0	R60-8 60-2BA CB60-S8	R60-8 CB60-8 CB60-8S
60.57-76.28	2/0	70-8	R70-8
76.28-96.3	3/0	80-3BA CB80-S8	
96.3-117.2	4/0	100-3BA CB100-S8	

JST: Japan Solderless Terminal Mfg. Co.
NTM: Nichifu Co., Ltd.
Notes *1 When using with a wire connection, use the crimp terminal combination shown above.

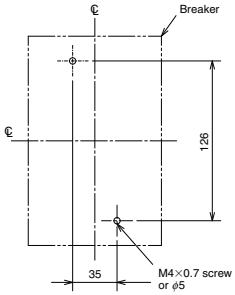

Drilling plan

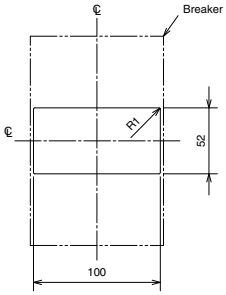

Front cover cutout

1mm clearance on each side of handle

NF250-SVU
NF250-HVU
NV250-SVU
NV250-HVU

NF250-HVU

Model				NF250-SVU		NF250-HVU	
Rated current In (A) Rated ambient temperature 40°C				125 150 175 200 225	250	125 150 175 200 225	250
Number of poles				3	3	3	3
Rated short-circuit breaking capacity (kA)	UL 489 CSA C22.2 No.5-02	Rated voltage VAC		480	480	600Y/347V	600Y/347V
		AC	600Y/347V	–	–	18	18
			480V	35	35	50	50
			240V	65	65	100	100
			120V	–	–	–	–
	IEC 60947-2 EN 60947-2 (Icu/Ics)	Rated insulation voltage Ui V		690	690	690	690
		AC	690V	8/4	8/4	10/5	10/5
			500V	25/13	25/13	36/18	36/18
			440V	36/18	36/18	50/25	50/25
			415V	36/18	36/18	50/25	50/25
			400V	36/18	36/18	50/25	50/25
			380V	36/18	36/18	50/25	50/25
			230V	65/33	65/33	100/50	100/50
Standard attached parts (Front connection)				Mounting screw M4×0.7×55 (2 screws), Insulating barrier (4pcs)			

Model				NV250-SVU		NV250-HVU	
Rated current In (A) Rated ambient temperature 40°C				125 150 175 200 225	250	125 150 175 200 225	250
Number of poles				3	3	3	3
Phase line				3ø3W 1ø2W	3ø3W 1ø2W	3ø3W 1ø2W	3ø3W 1ø2W
Rated voltage VAC	UL 489			120-480	120-480	120-480	120-480
	IEC 60947-2 EN 60947-2			100-440	100-440	100-440	100-440
High-speed type	Rated current sensitivity IΔn mA			30/50/ 100/200/500 selectable	30/50/ 100/200/500 selectable	30/50/ 100/200/500 selectable	30/50/ 100/200/500 selectable
	Pick-up current UL 1053			75% of IΔn	75% of IΔn	75% of IΔn	75% of IΔn
	Operating time s within AT 5IΔn			0.04 (*1)	0.04 (*1)	0.04 (*1)	0.04 (*1)
Earth-leakage indication system				Mechanical button	Mechanical button	Mechanical button	Mechanical button
Rated short-circuit breaking capacity (kA)	UL 489 CSA C22.2 No.5-02	AC	480V	35	35	50	50
			240V	65	65	100	100
			120V	65	65	100	100
	IEC 60947-2 EN 60947-2 (Icu/Ics)	AC	440V	36/18	36/18	50/25	50/25
			400V	36/18	36/18	50/25	50/25
			230V	65/33	65/33	100/50	100/50
			100V	65/33	65/33	100/50	100/50

Note *1 0.1 for UL1053.

Operating Characteristics (The CE and CCC characteristics are noted differently. Contact us for more information.)

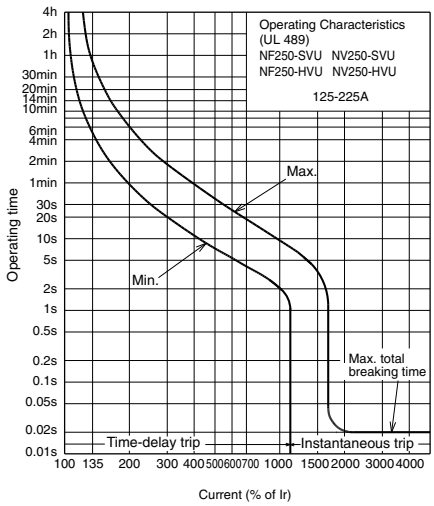

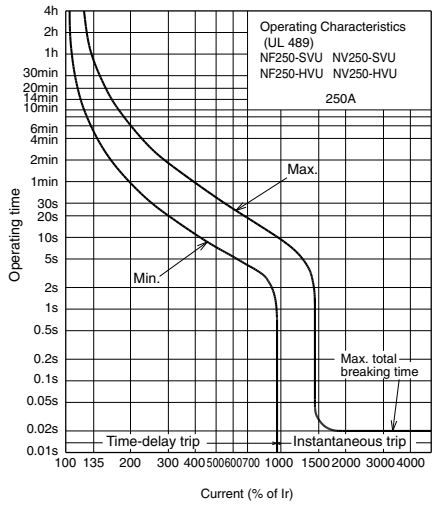

Earth Leakage Tripping Characteristics

(The CE and CCC characteristics are noted differently. Contact us for more information.)

NV250-SVU
NV250-HVU
(UL 1053)

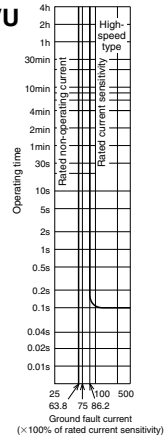

Internal Accessories

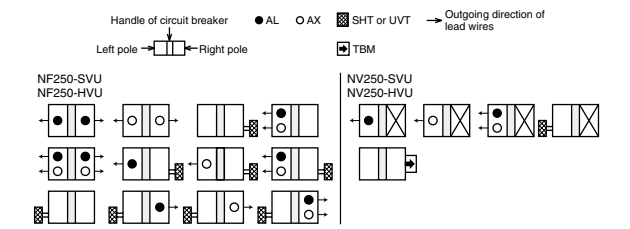

Temperature Compensation Curve

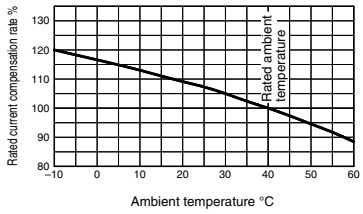

Internal Wiring Diagram

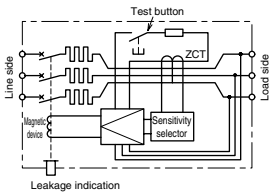

External Accessories

Accessories		Type name	Reference page
Operating handle	F	F-2SVUL	117
	V	V-2SVUL	119
Handle lock device	HL	HLF-05SVU	127
	HL-S	HLS-2SVU	

Accessories			Type name	Reference page
Terminal cover	Large	TC-L	TCL-2SVU3	121
			TCL-2SVU3L	

Outline Drawing

Front connection

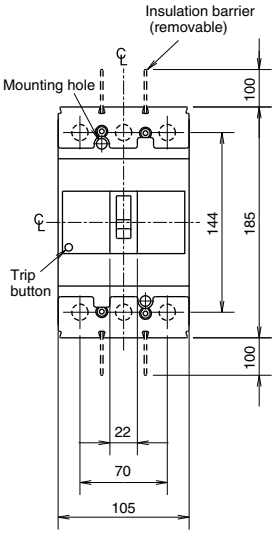

(NF250-SVU, NF250-HVU)

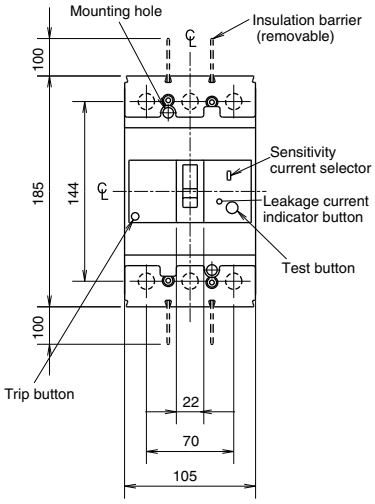

(NV250-SVU, NV250-HVU)

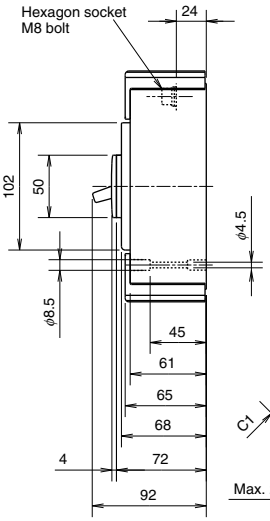

Compatible crimp terminals Tightening torque 90lb-in (10N.m)

Applicable wire range		Crimp terminal type (*2)	
mm²	AWG (#) (60°C/75°C)	JST	NTM
16.78-26.66	4	R22-8 22-S8	R22-8 R22-8S CB22-8S
26.66-42.42	2	R38-8 38-S8	R38-8 R38-8S
42.42-60.57	1/0	R60-8 60-2BA CB60-S8	R60-8 CB60-8 CB60-8S
60.57-76.28	2/0	70-8	R70-8
76.28-96.3	3/0	80-3BA CB80-S8	
96.3-117.2	4/0	100-3BA CB100-S8	
117.2-152.05	250/300MCM	CB150-S8 (*1)	

JST: Japan Solderless Terminal Mfg. Co.
NTM: Nichifu Co., Ltd.
Notes *1 TCL-2SVU3L can be mounted when using CB150-S8.
*2 When using with a wire connection, use the crimp terminal combination shown above.

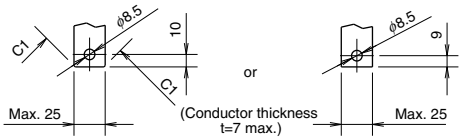

Conductor drilling for direct connection

Front connection (solderless terminal)

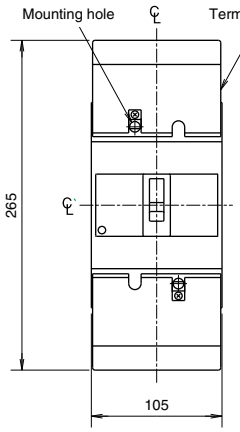

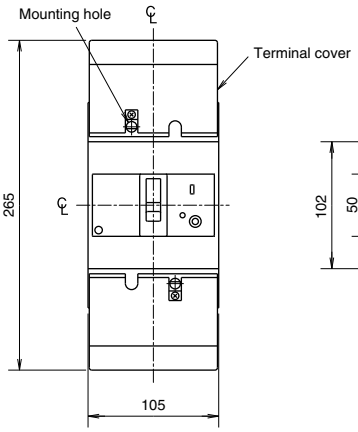

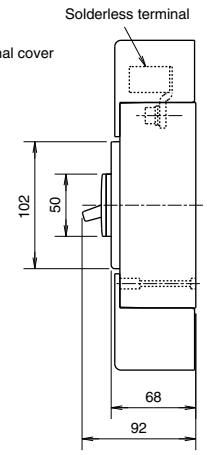

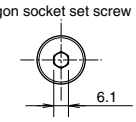

Wire size 60°C/75°C CU ONLY	Number of strands
4-2AWG	7
1-1/0AWG	19
3/0-4/0AWG	19
250-350MCM	37

The tightening torque is different according to connected wire.
Refer to instruction manual for details.

Remark: Periodical retightening prevents overheating by the setting of twisted strands or the stress of heating and cooling.

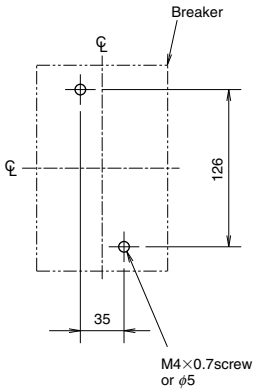

Drilling plan

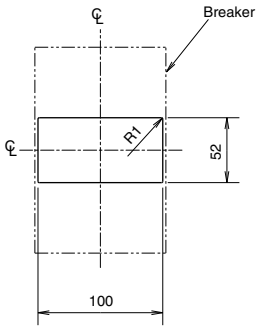

The drilling dimensions have a 1.0 mm clearance on each side of breaker window frame.

Front panel drilling plan

NF400-SWU
NF400-HWU

NF400-SWU

Model				NF400-SWU	NF400-HWU
Rated current In (A) at ambient temperature 40˚C				250 300 350 400	250 300 350 400
Number of poles				3	3
Rated short-circuit breaking capacities (kA)	UL 489 CSA C22 2 No.5-02	Rated voltage (VAC)		600Y/347	600Y/347
		AC	600Y/347V	20	25
			480V	35	65
			240V	65	100
	IEC 60947-2 EN 60947-2 (Icu/Ics)	Rated insulation voltage Ui (V)		690	690
		AC	690V	10/10(5/5) (*1)	15/10
			500V	30/30(25/25) (*1)	42/42
			440V	42/42(36/36) (*1)	65/65
			400V	45/45(36/36) (*1)	70/70
			230V	85/85(65/65) (*1)	100/100
Standard attached parts				Mounting screw: M6×60 (4screws) Insulating plate (1pce) Insulating barrier (4pcs) (Only for type with bar terminals)	Mounting screw: M6×60 (4screws) Insulating plate (1pce) Insulating barrier (4pcs) (Only for type with bar terminals)

Note *1 In case of solderless terminal, interrupting capacity reduces: (/).
*2 0.1 for UL1053.

Operating Characteristics

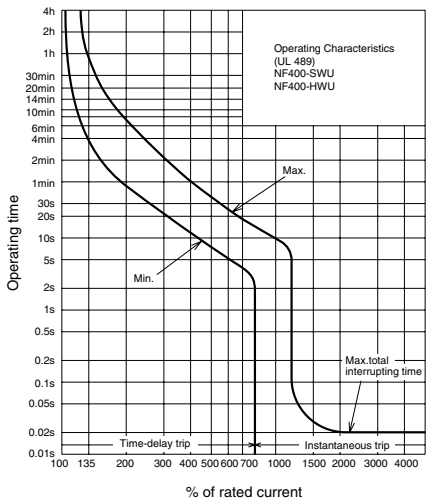

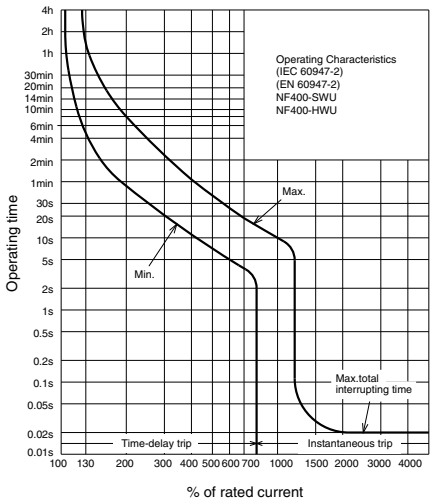

Internal Accessories

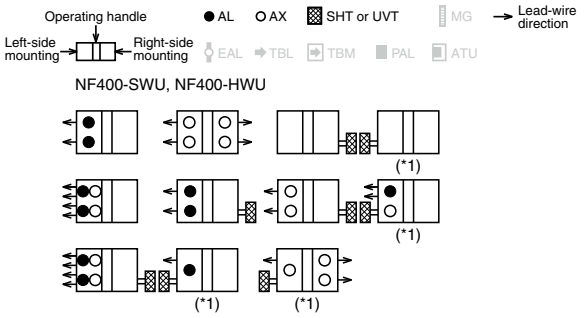

Note *1 Right-side mounting is standard of SHT and UVT. Specify separataly for left-side mounting.

Temperature Compensation Curve

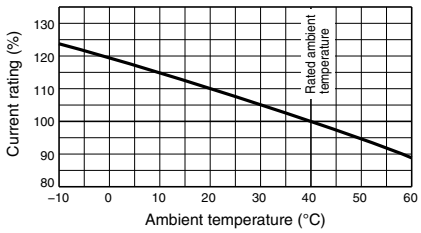

External Accessories

Accessories		Type name	Reference page	Accessories			Type name	Reference page
Operating handle	F	F-4SUL	117	Terminal cover	Large	TC-L	TCL-4SWU	121
	V	V-4SUL	119					
Handle lock device	HL	HL-4SWU	127					

Outline Drawing

Front connection (Solderless terminal)

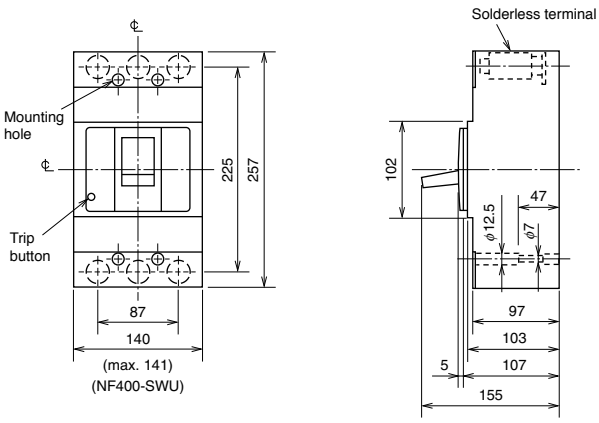

Hexagon socket set screw

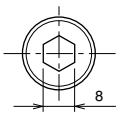

Tightening torque
275lb-in. (31.1N·m)

UL

Ampere ratings	Wire size	Number of strands
250A, 300A	250-350kcmil CU	37
250A	350kcmil AL	
350A, 400A	(2) 3/0AWG CU	19

IEC

Ampere ratings	Wire size (IEC 60228)	
	Class 2	Class 5
250A, 300A	70-185mm^2	95-185mm^2
350A, 400A	150-240mm^2	150-185mm^2

3. Use a wire size that can carry the rated current.
4. When using IEC Class 5 (multi-core wire), pay attention to strand breakage and pinching, etc., while tightening.
5. The NF400-HWU does not have a solderless terminal.

Remarks: 1. Do not remove solderless terminal in any case.
2. When using the solderless terminals, conduct periodic inspections and tightening as the wires may wear down over use.

Front connection (Busbar terminal)

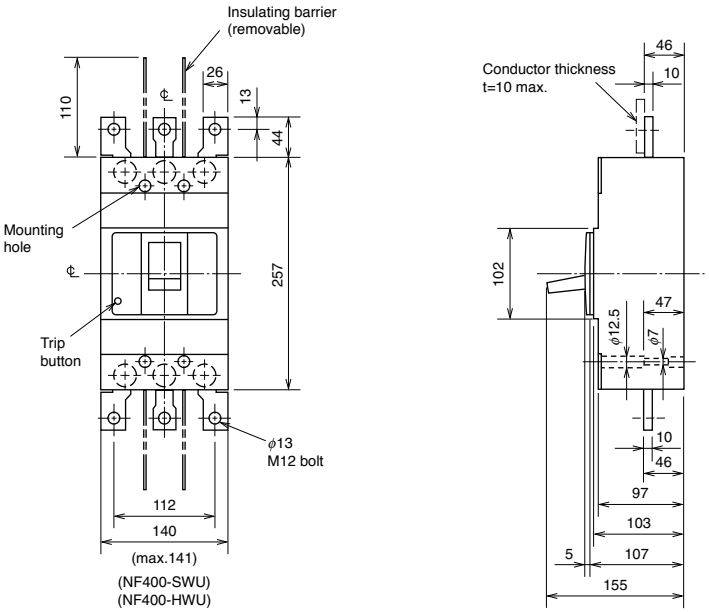

Remark: Do not remove busbar terminal in any case.

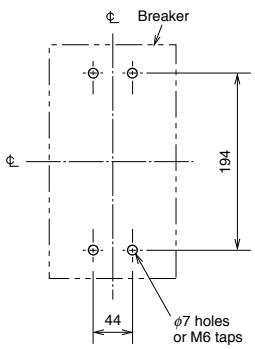

Drilling plan

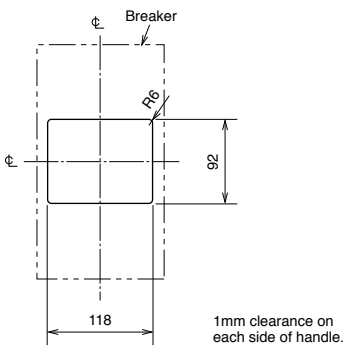

Front-panel cutout

CAUTION

When mounted in steel or cast box cover must be insulated as shown.
58mm air gap to cover or 0.8mm fibre insulating plate extending 12.7mm out from each side of breaker.

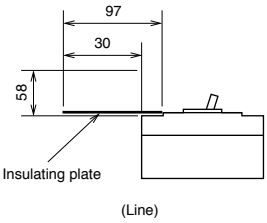

NF630-SWU
NF630-HWU

NF630-SWU

Model				NF630-SWU	NF630-HWU
Rated current In (A) at ambient temperature 40°C				500 600 630	500 600 630
Number of poles				3	3
Rated short-circuit breaking capacities (kA)	UL 489 CSA C22.2 No.5-02	Rated voltage (VAC)		600Y/347	600Y/347
		AC	600Y/347V	20	25
			480V	35	65
			240V	85	100
	IEC 60947-2 EN 60947-2 (Icu/Ics)	Rated insulation voltage Ui (V)		690	690
		AC	690V	10/10	15/10
			500V	30/30	42/42
			440V	42/42	65/65
			400V	45/45	70/70
			230V	85/85	100/100
Standard attached parts				Mounting screw: M6×35 (4pcs) Insulating plate (1pce) Insulating barrier (500A,600A: 2pcs, 630A: 4pcs) (Only for type with bar terminals)	Mounting screw: M6×35 (4pcs) Insulating plate (1pce) Insulating barrier (500A,600A: 2pcs, 630A: 4pcs) (Only for type with bar terminals)

Operating Characteristics

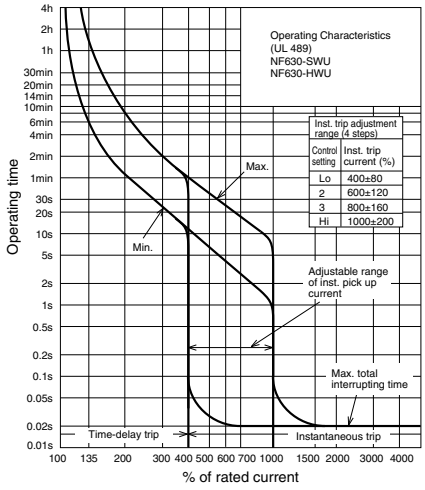

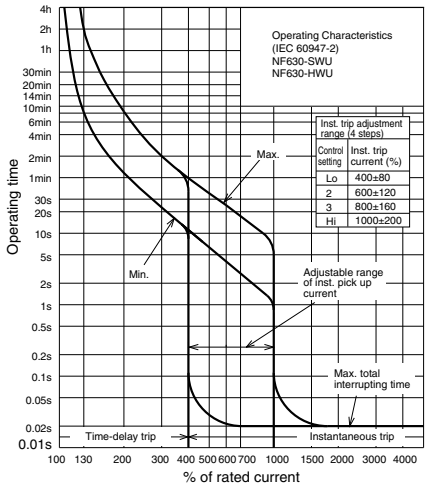

Internal Accessories

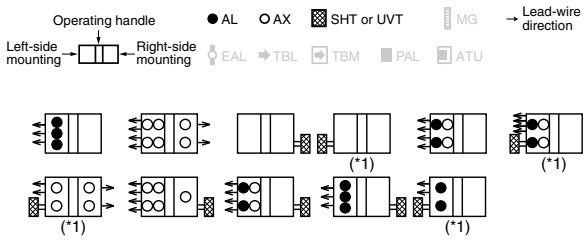

Note *1 Right-side mounting is standard of SHT and UVT. Specify separataly for left-side mounting.

Temperature Compensation Curve

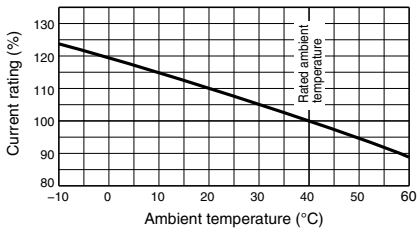

External Accessories

Accessories		Type name	Reference page	Accessories			Type name	Reference page
Operating handle	F	F-6SUL	117	Terminal cover	Large	TC-L	TCL-6SWU	121
	V	V-6SUL	119					
Handle lock device	HL	HL-4SWU	127					

Outline Drawing

Front connection (Solderless terminal)

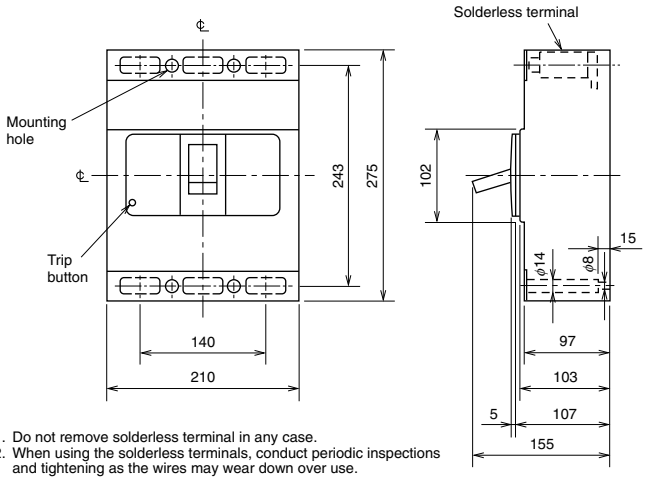

Hexagon socket set screw

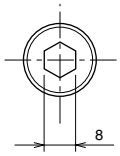

Tightening torque
275lb-in. (31.1N·m)

UL

Ampere ratings	Wire size	Number of strands
500A, 600A	(2) 250-350kcmil CU ONLY	37

IEC

Ampere ratings	Wire size (IEC 60228)	
	Class 2	Class 5
500A, 600A	(2) 95-185mm^2	(2) 120-185mm^2

Remarks: 1. Do not remove solderless terminal in any case.
2. When using the solderless terminals, conduct periodic inspections and tightening as the wires may wear down over use.
3. Use a wire size that can carry the rated current.
4. When using IEC Class 5 (multi-core wire), pay attention to strand breakage and pinching, etc., while tightening.
5. The 630A and NF630-HWU does not have a solderless terminal.

Front connection (Busbar terminal)

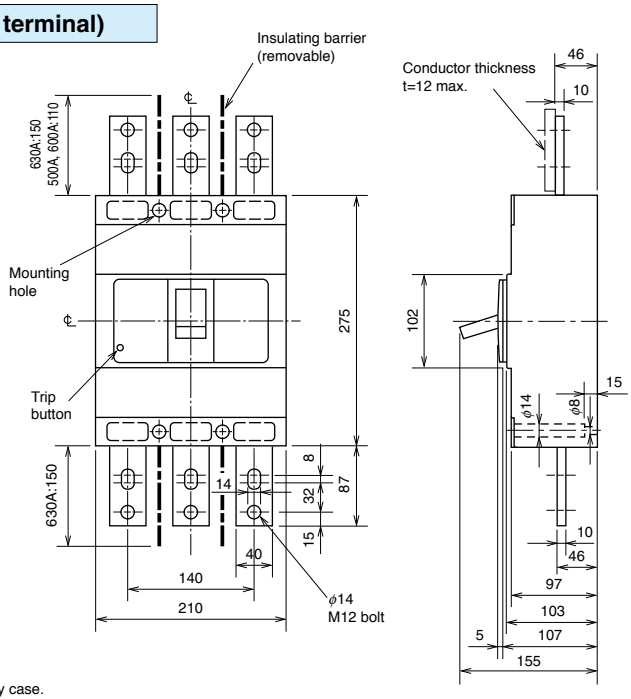

Remark: Do not remove busbar terminal in any case.

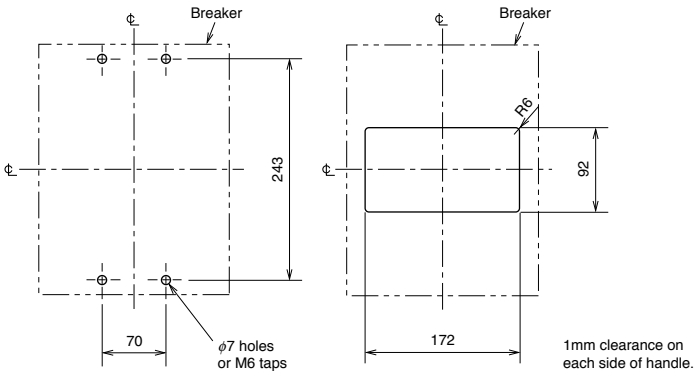

Drialling plan

Front-panel cutout

CAUTION

When mounted in steel or cast box cover must be insulated as shown.
58mm air gap to cover or 0.8mm fibre insulating plate extending 12.7mm out from each side of breaker.

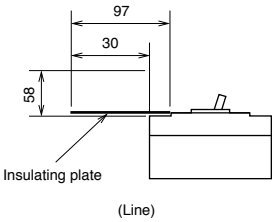

NF250-SEV with MDU
NF250-HEV with MDU

Model				NF250-SEV with MDU		NF250-HEV with MDU	
Rated current In (A) Rated ambient temperature 40°C				250		250	
Current setting Ir (A)				125-250		125-250	
Number of poles				3	4	3	4
Rated insulation voltage Ui (V)				690		690	
Rated short-circuit breaking capacity (kA)	IEC 60947-2 (Icu/Ics)	AC	690V	8/8		10/8	
			500V	18/18		30/23	
			440V	36/36		50/50	
			415V	36/36		70/70	
			400V	36/36		75/75	
			380V	36/36		75/75	
			230V	85/85		100/100	
		DC	250V	–		–	
Standard attached parts (Front connection)				Mounting screw M4 × 0.7 × 55 (3P: 2psc, 4P: 4pcs) Insulation barrier (3P: 4pcs, 4P: 6pcs)			
MDU accessories		Breaker mounting		MDU, Connection cable (for breaker mounting)			
		Panel mounting		MDU, Panel mounting bracket, Panel mounting screw, Connection cable (for panel mounting)			

NF250-SEV with MDU (Breaker mounting)

NF250-SEV with MDU (Panel mounting)

Operating Characteristics

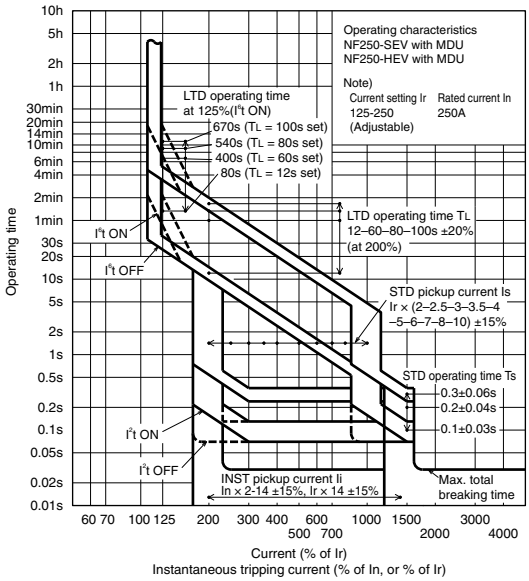

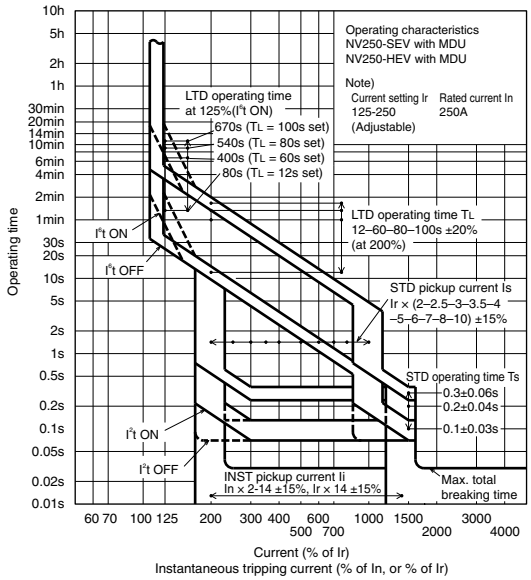

Internal Accessories

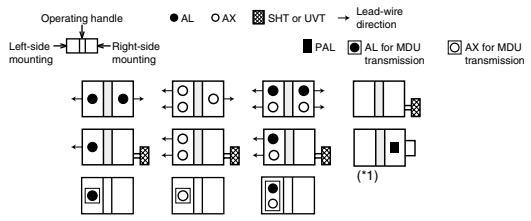

Note *1 SLT-equipped is standard. Control voltage (100-240VAC/100-240VDC) is necessary.

Current Reducing Curve

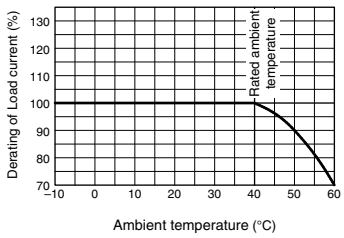

The rated current does not have thermal characteristics. Reduce the current as shown in the curve on the left chart if the ambient temperature exceeds 40 °C.

External Accessories

Accessories		Type name	Reference page
Operating handle (*1)	F	F-2SV	117
	V	V-2SV	119
Handle lock device	LC	LC-05SV	127
	HL (*2)	HLF-05SV	
		HLN-05SV	
	HL-S (*1)	HLS-2SV	

Accessories				Type name	Reference page
Mechanical interlock		MI (*3)	3P	MI-05SV3	129
			4P	MI-2SV4	
Terminal cover	Small	TC-S	3P	TCS-2SV3 (*5)	121
	Large	TC-L	3P	TCL-2SV3 (*5)	
				TCL-2SV3L (*5)	
			4P	TCL-2SV4	
	Skeleton	TTC	3P	TTC-2SV3 (*5)	
	Rear	BTC	3P	BTC-2SV3 (*5)	
Electrical operation device (*1)				(*4)	133

Notes *1 Available only for the MDU panel mounting type.
*2 HLF types are used for OFF lock and HLN types for ON lock.
*3 When selecting the MDU breaker mounting, only the MI panel mounting can be manufactured.
*4 Specify the working voltage.
*5 In the case of the MDU breaker mounting type, specify the model name with MP at the end.

Outline Drawing

Front connection

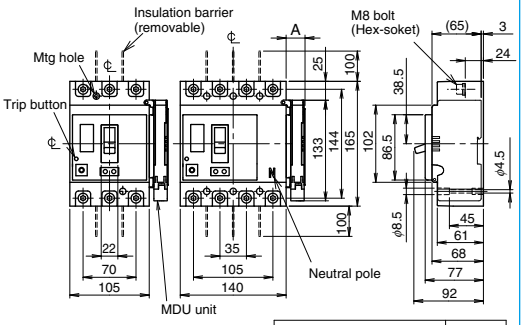

3-pole 4-pole

MDU breaker mounting

MDU specification	A
No transmission, pulse output	25
CC-Link	32

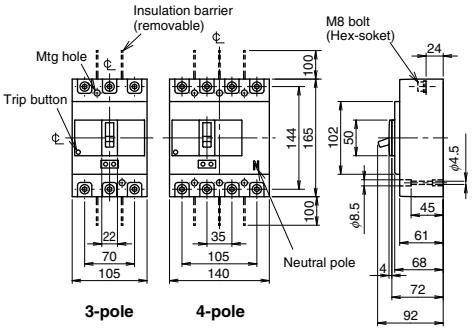

3-pole 4-pole

MDU panel mounting

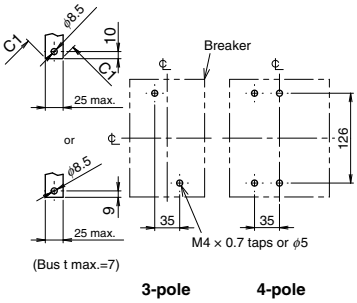

3-pole 4-pole

Bus drilling for direct connection

Drilling plan

Rear mounting

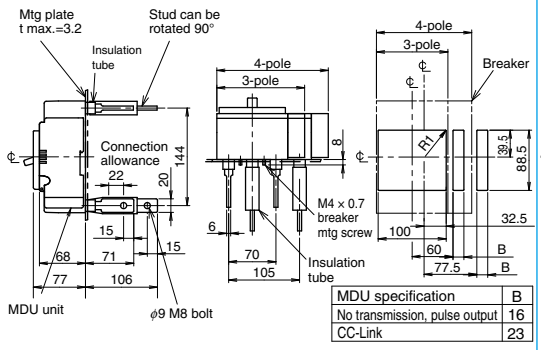

MDU specification	B
No transmission, pulse output	16
CC-Link	23

MDU breaker mounting Front-plate cut out

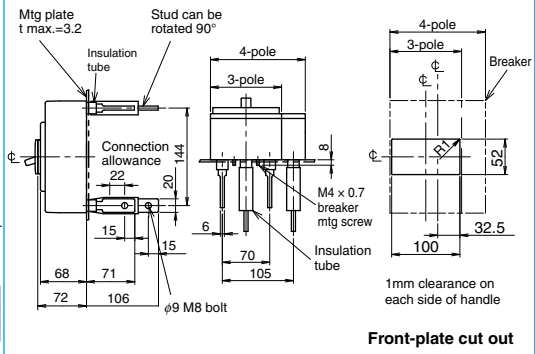

Front-plate cut out

MDU panel mounting

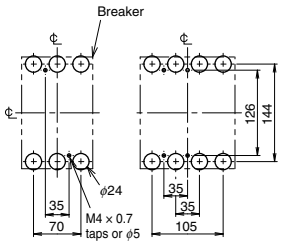

3-pole 4-pole

Drilling plan

MDU unit terminal for breaker mounting

This figure is without terminal cover.
Please bind wires.

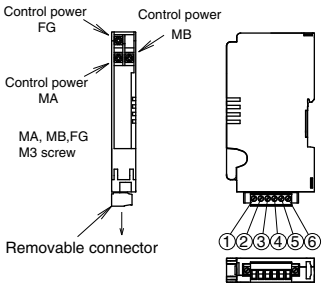

MDU specification	①	②	③	④	⑤	⑥
No transmission	–	–	–	–	–	–
Pulse output	–	–	–	–	Cb	Ca
CC-Link	–	SLD	–	DG	DB	DA

MDU panel mounting

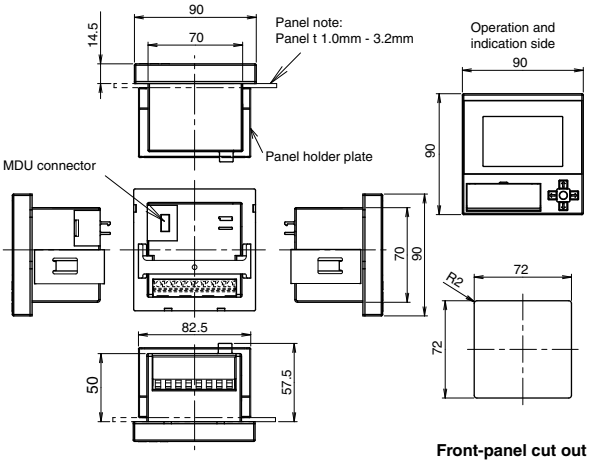

Front-panel cut out

MDU terminal for panel mounting

This figure is without terminal cover.
Please bind wires.

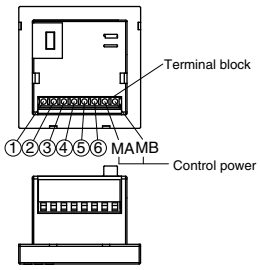

MDU specification	①	②	③	④	⑤	⑥
No transmission	–	–	–	–	FG	–
Pulse output	Ca	Cb	–	–	FG	–
CC-Link	DA	DB	DG	SLD	FG	–

NF400-SEP with MDU
NF400-HEP with MDU

Model				NF400-SEP with MDU		NF400-HEP with MDU	
Rated current In (A) Rated ambient temperature 40°C				200 225 250 300 350 400 Adjustable			
Number of poles				3	4	3	4
Rated operational voltage Ue V				690		690	
Rated short-circuit breaking capacity (kA)	IEC 60947-2 (Icu/Ics)	AC	690V	10/10		10/10	
			500V	30/30		50/50	
			440V	42/42		65/65	
			415V	45/45		70/70	
			400V	45/45		70/70	
			380V	45/45		70/70	
			230V	85/85		100/100	
			200V	85/85		100/100	
Standard attached parts (Front connection)		Breaker		Mounting screw M6 × 60 (4pcs) Insulation barrier (3P: 4pcs, 4P: 6pcs)			
MDU accessories		Breaker mounting		MDU, Connection cable (for breaker mounting)			
		Panel mounting		MDU, Panel mounting bracket, Panel mounting screw, Connection cable (for panel mounting)			

NF400-SEP with MDU (Breaker mounting)

Operating Characteristics

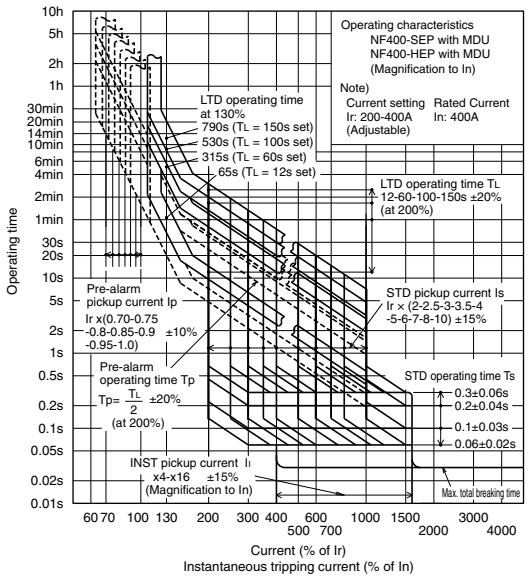

Internal Accessories

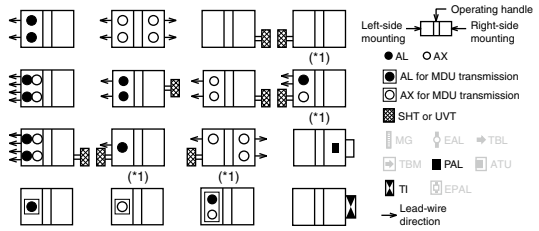

Note *1 Right side mounting is standard of SHT and UVT. Specify separately for left side mounting.

Current Reducing Curve

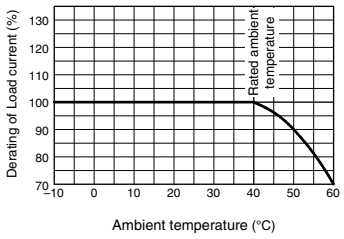

The rated current does not have thermal characteristics. Reduce the current as shown in the curve on the left chart if the ambient temperature exceeds 40°C.

External Accessories

Accessories			Type name: Breaker mounting	Type name: Panel mounting	Reference page
Operating handle	F		–	F-4S	117
	V		–	V-4S	119
Handle lock device	HL		HL-4SW	HL-4SW	127
	HL-S		–	HLS-4SW	
Mechanical interlock	MI (*2)	3P	MI-4SW3	MI-4SW3	129
		4P	MI-4SW4	MI-4SW4	
Auxiliary handle	HT		HT-4SW	HT-4SW	128

Accessories				Type name: Breaker mounting	Type name: Panel mounting	Reference page
Terminal cover	Large	TC-L	3P	–	TCL-4SW3 (*1)	121
			4P	–	TCL-4SW4 (*1)	
	Skeleton	TTC	3P	TTC-4SW3-MDU	TTC-4SW3	
			4P	TTC-4SW4-MDU	TTC-4SW4	
	Rear	BTC	3P	BTC-4SW3 (*1) Only line side	BTC-4SW3 (*4)	
			4P	BTC-4SW4 Only line side	BTC-4SW4	
Electrical operation device		NFM	3P	–	(*3)	133
			4P			

Notes *1 For NF400SEP with MDU.
*2 When selecting the MDU breaker mounting, only the MI panel mounting can be manufactured.
*3 Specify the operation method and voltage. Order in combination with the breaker unit.
*4 This is for NF400-SEP with MDU. For rear terminal cover of NF400-HEP with MDU, use PTC-4SW3.

Outline Drawing

Front connection

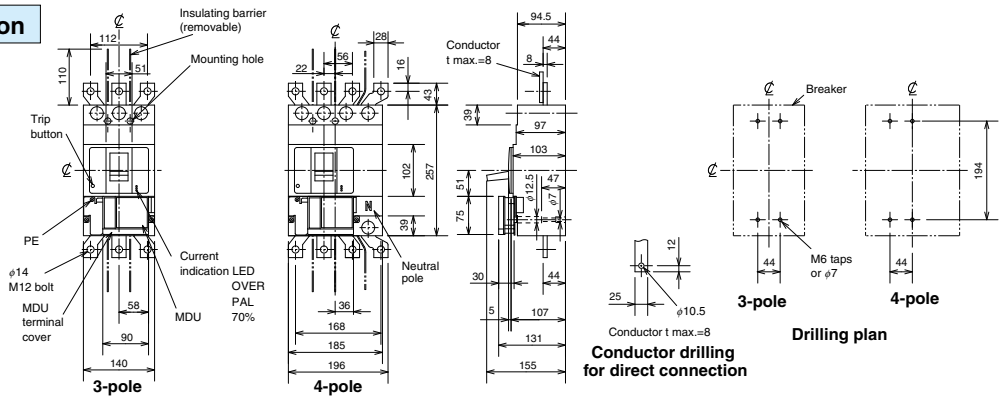

Rear connection

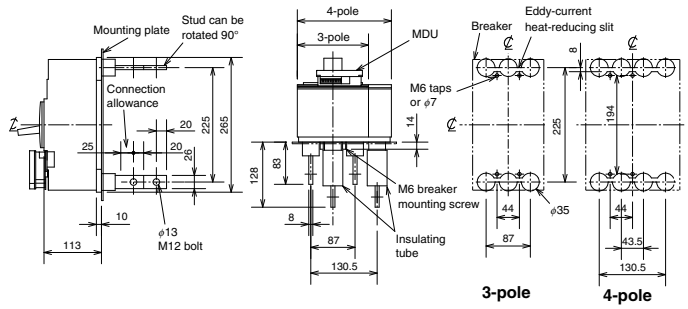

Note The drilling plan is different if insulating barriers are installed.

Front-plate cutout

1mm clearance on each side of handle. (Load side of breaker mounting has given the space to pass wires to the terminal.)

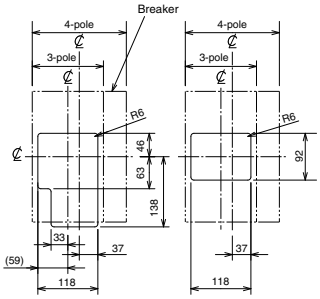

CC-Link ; only MDU panel mounting

NF400-SEP, NF400-HEP with MDU (No transmission, pulse output)

MDU panel mounting

MDU is connected with circuit breaker via MDU connection cable.

Space greater than the value shown in the figure below must be secured, and must be separate 10cm or more from the distribution line.

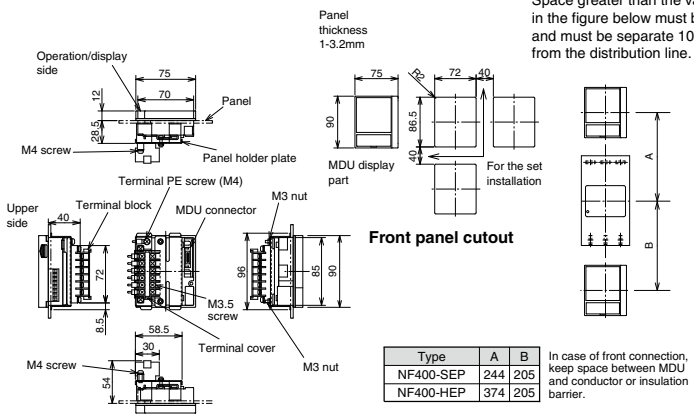

Type	A	B
NF400-SEP	244	205
NF400-HEP	374	205

In case of front connection, keep space between MDU and conductor or insulation barrier.

MDU terminal

Figure of the breaker mounting is removed the terminal cover.

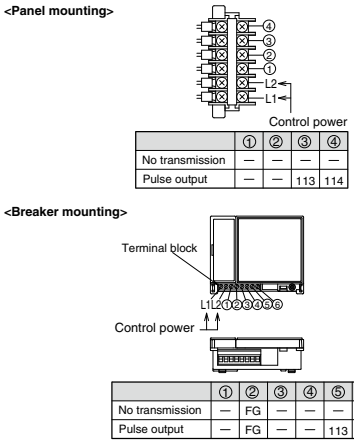

	①	②	③	④
No transmission	—	—	—	—
Pulse output	—	—	113	114

	①	②	③	④	⑤	⑥
No transmission	—	FG	—	—	—	—
Pulse output	—	FG	—	—	113	114

NF400-SEP, NF400-HEP with MDU (CC-Link)

MDU panel mounting

MDU is connected with circuit breaker via MDU connection cable.

Space greater than the value shown in the figure below must be secured, and must be separate 10cm or more from the distribution line.

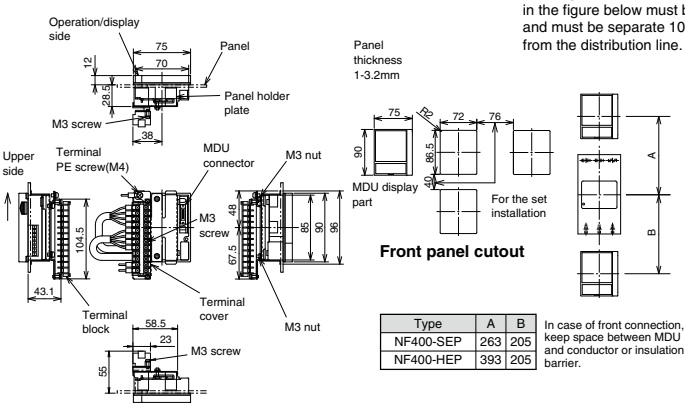

Type	A	B
NF400-SEP	263	205
NF400-HEP	393	205

In case of front connection, keep space between MDU and conductor or insulation barrier.

MDU terminal

Figure of the breaker mounting is removed the terminal cover.

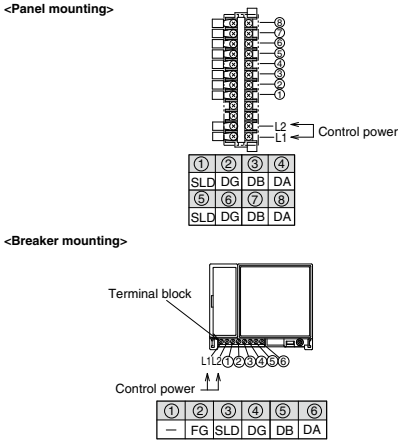

①	②	③	④
SLD	DG	DB	DA
⑤	⑥	⑦	⑧
SLD	DG	DB	DA

①	②	③	④	⑤	⑥
—	FG	SLD	DG	DB	DA

NF630-SEP with MDU
NF630-HEP with MDU
NF800-SEP with MDU
NF800-HEP with MDU

NF630-SEP with MDU (Breaker mounting)

Model				NF630-SEP with MDU		NF630-HEP with MDU		NF800-SEP with MDU		NF800-HEP with MDU	
Rated current In (A) Rated ambient temperature 40°C				300 350 400 500 600 630 Adjustable				400 450 500 600 700 800 Adjustable			
Number of poles				3	4	3	4	3	4	3	4
Rated operational voltage Ue V				690		690		690		690	
Rated short-circuit breaking capacity (kA)	IEC 60947-2 (Icu/Ics)	AC	690V	10/10		15/15		10/10		15/15	
			500V	30/30		50/50		30/30		50/50	
			440V	42/42		65/65		42/42		65/65	
			415V	45/45		70/70		45/45		70/70	
			400V	45/45		70/70		45/45		70/70	
			380V	45/45		70/70		45/45		70/70	
			230V	85/85		100/100		85/85		100/100	
			200V	85/85		100/100		85/85		100/100	
Standard attached parts (Front connection) (*1)		Breaker		Mounting screw M6 × 35 (4pcs) Insulation barrier (3P: 2pcs, 4P: 3pcs)							
MDU accessories		Breaker mounting		MDU, Breaker mounting plate, Mounting screw for breaker mounting plate, Connection cable (for breaker mounting), MDU Mounting screw							
		Panel mounting		MDU, Panel mounting bracket, Panel mounting nut, Connection cable (for panel mounting), MDU Mounting screw							

Note *1 4-pole models are provided with auxiliary handle.

Operating Characteristics

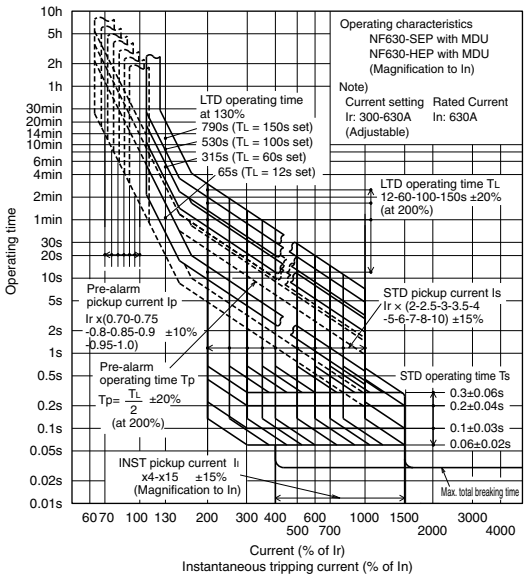

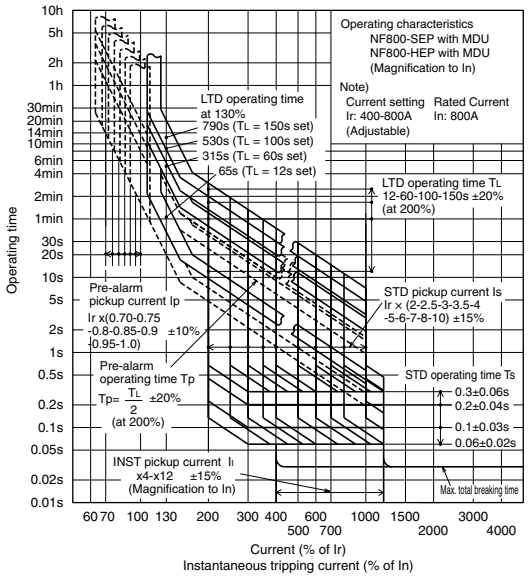

Internal Accessories

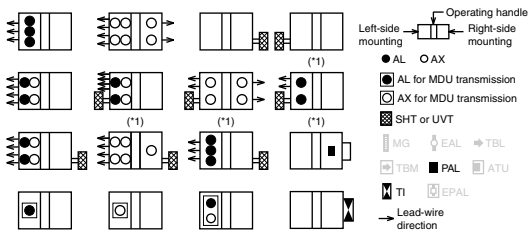

Note *1 Right side mounting is standard of SHT and UVT. Specify separately for left side mounting.

Current Reducing Curve

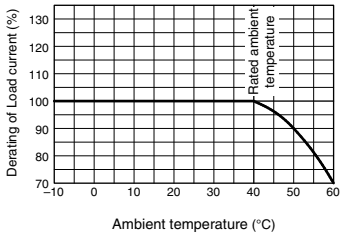

The rated current does not have thermal characteristics. Reduce the current as shown in the curve on the left chart if the ambient temperature exceeds 40°C.

External Accessories

Accessories			Type name: Breaker mounting	Type name: Panel mounting	Reference page
Operating handle	F		–	F-8S	117
	V		–	V-8S	119
Handle lock device	HL		HL-4SW	HL-4SW	127
	HL-S		–	HLS-8SW	
Mechanical interlock	MI (*1)	3P	MI-8SW3	MI-8SW3	129
		4P	MI-8SW4	MI-8SW4	
Auxiliary handle	HT		HT-4SW	HT-4SW	128

Notes *1 When selecting the MDU breaker mounting, only the MI panel mounting can be manufactured.
*2 Specify the operation method and voltage. Order in combination with the breaker unit.

Accessories				Type name: Breaker mounting	Type name: Panel mounting	Reference page
Terminal cover	Large	TC-L	3P	–	TCL-8SW3	121
			4P	–	TCL-8SW4	
	Skeleton	TTC	3P	TTC-8SW3-MDU	TTC-8SW3	
			4P	TTC-8SW4-MDU	TTC-8SW4	
	Rear	BTC	3P	BTC-8SW3 Only line side	BTC-8SW3	
			4P	BTC-8SW4 Only line side	BTC-8SW4	
Electrical operation device		NFM	3P	–	(*2)	133
			4P			

Outline Drawing

Front connection

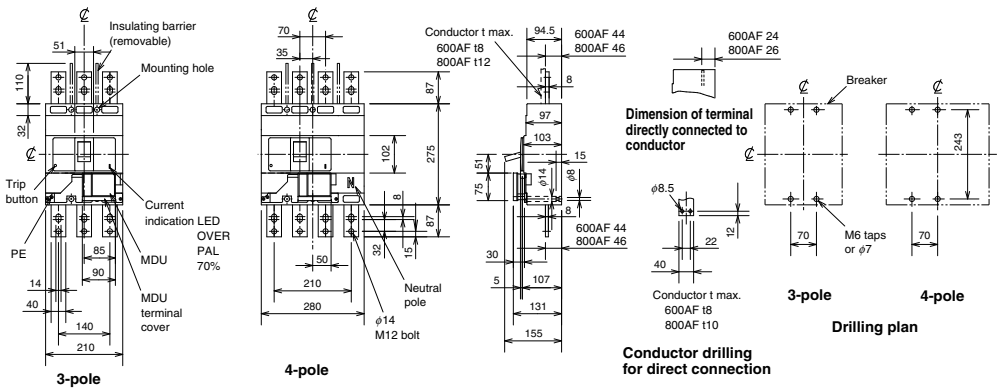

Rear connection

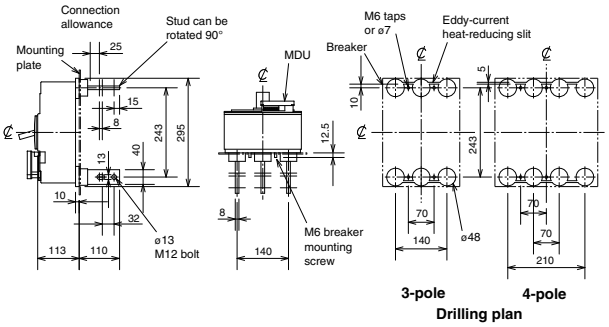

Note The drilling plan is different if insulating barriers are installed.

Front-plate cutout

1mm clearance on each side of handle. (Load side of breaker mounting has given the space to pass wires to the terminal.)

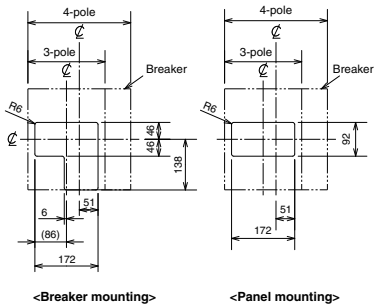

CC-Link ; only MDU panel mounting

NF630-SEP, NF630-HEP, NF800-SEP, NF800-HEP with MDU (No transmission, Pulse output)

MDU panel mounting

MDU is connected with circuit breaker via MDU connection cable.

Space greater than the value shown in the figure below must be secured, and must be separate 10cm or more from the distribution line.

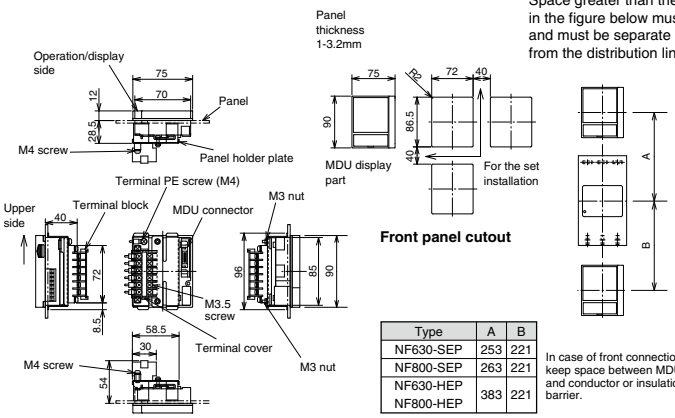

Type	A	B
NF630-SEP	253	221
NF800-SEP	263	221
NF630-HEP NF800-HEP	383	221

In case of front connection, keep space between MDU and conductor or insulation barrier.

MDU terminal

Figure of the breaker mounting is removed the terminal cover.

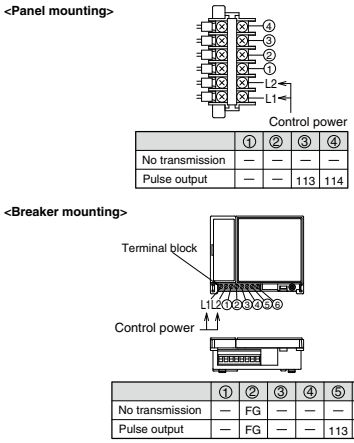

	①	②	③	④
No transmission	—	—	—	—
Pulse output	—	—	113	114

	①	②	③	④	⑤	⑥
No transmission	—	FG	—	—	—	—
Pulse output	—	FG	—	—	113	114

NF630-SEP, NF630-HEP, NF800-SEP, NF800-HEP with MDU (CC-Link)

MDU panel mounting

MDU is connected with circuit breaker via MDU connection cable.

Space greater than the value shown in the figure below must be secured, and must be separate 10cm or more from the distribution line.

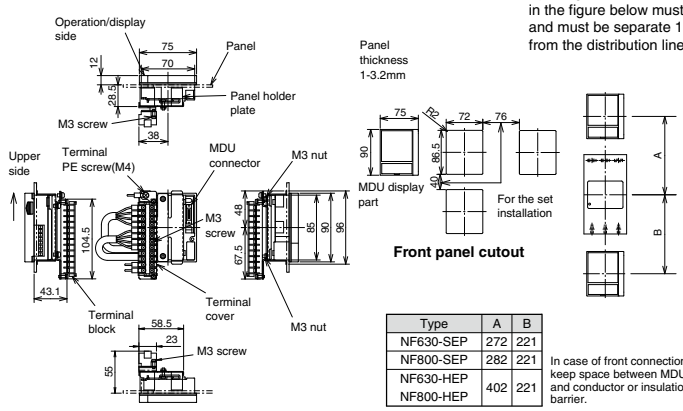

Type	A	B
NF630-SEP	272	221
NF800-SEP	282	221
NF630-HEP NF800-HEP	402	221

In case of front connection, keep space between MDU and conductor or insulation barrier.

MDU terminal

Figure of the breaker mounting is removed the terminal cover.

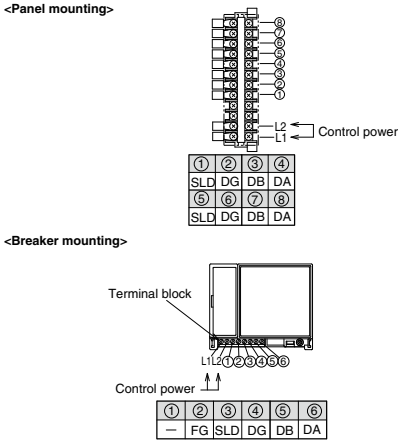

①	②	③	④
SLD	DG	DB	DA
⑤	⑥	⑦	⑧
SLD	DG	DB	DA

①	②	③	④	⑤	⑥
—	FG	SLD	DG	DB	DA

BH
BH-P

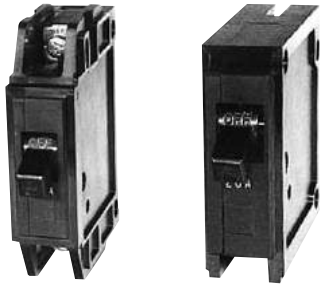

BH BH-P

Model			BH			BH-P		
Number of poles			1	2	3	1	2	3
Rated current (A) at ambient temperature 40˚C			70	70, 100	70, 100	70	70, 100	70, 100
Rated voltage (V)		AC	230/400			230/400		
		DC	125			125		
Rated short circuit capacity (kA)	IEC 60898-1	AC230/400V	3	–		3	–	
		AC400V	–	3		–	3	
	–	DC125V	1			1		

Operating Characteristics

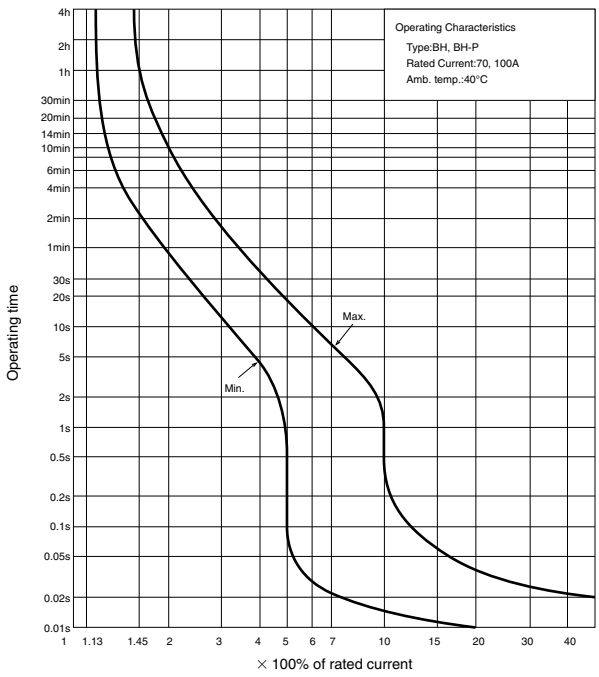

Temperature Compensation Curve

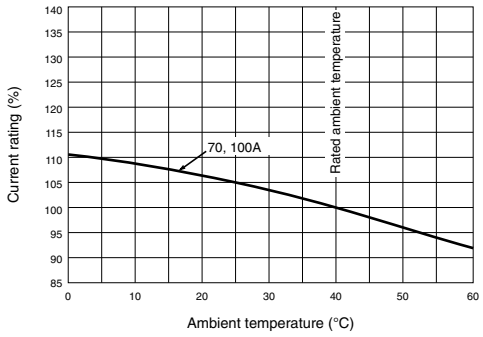

Outline Drawing

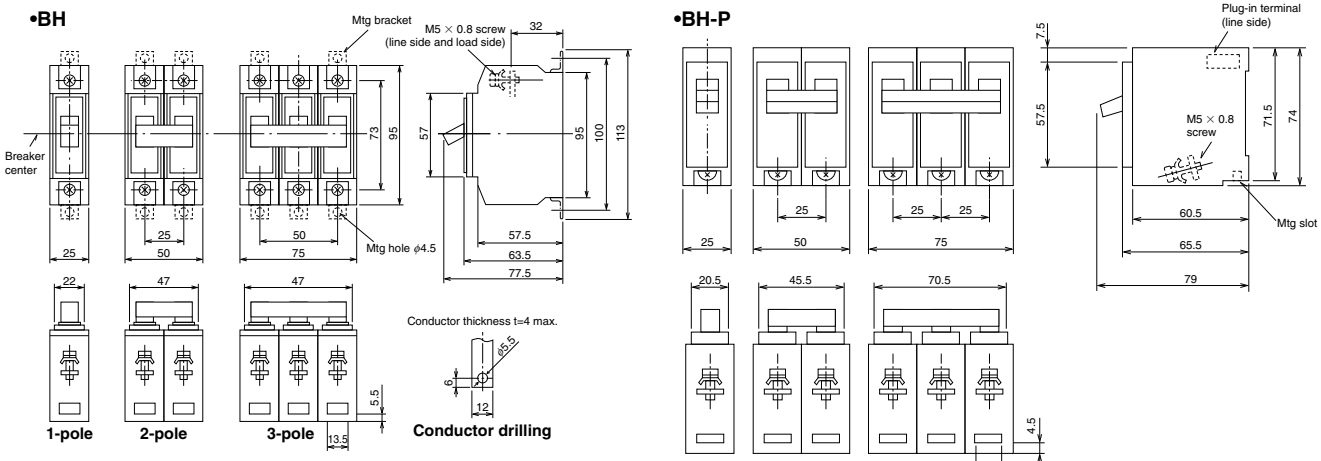

Note Two mounting brackets are used for single-pole breakers.
and four for 2-pole and 3-pole breakers.

BHW-T10 (0.5 to 63A)

BHW-T10 (0.5 to 63A)

Model				BHW-T10											
Number of poles (P)				1	1+N (*1)	2	3	3+N (*1)	4	1	1+N (*1)	2	3	3+N (*1)	4
Instantaneous tripping				Type B						Type C, D					
Rated insulation voltage Ui (V)				660						660					
Rated current In (A) at ambient temperature 30°C				6, 10, 16, 20, 25, 32, 40, 50, 63						0.5, 1, 2, 3, 4, 5, 6, 10, 16, 20, 25, 32, 40, 50, 63					
Rated short-circuit capacity (kA)	IEC/EN 60898-1 (Icn)	AC	240V	10						10					
			240/415V	10	–	10				10	–	10			
			415V	–		10				–		10			

Note *1 N pole is a switched neutral pole (without overcurrent release device).

Operating Characteristics

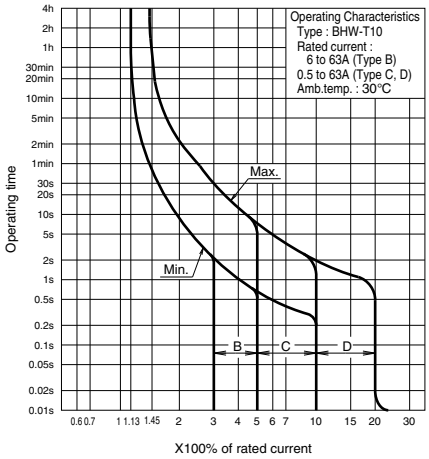

Outline Drawing

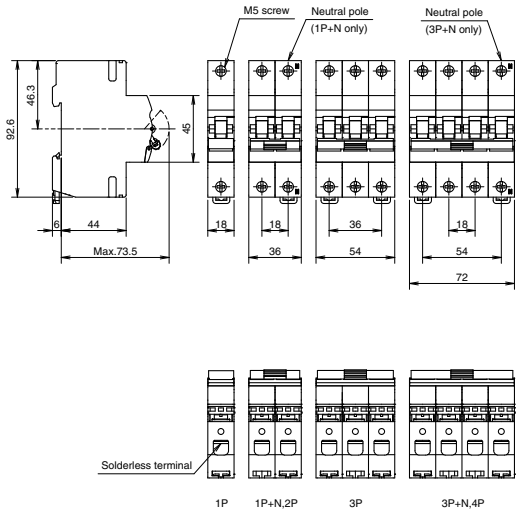

Temperature Compensation Curve

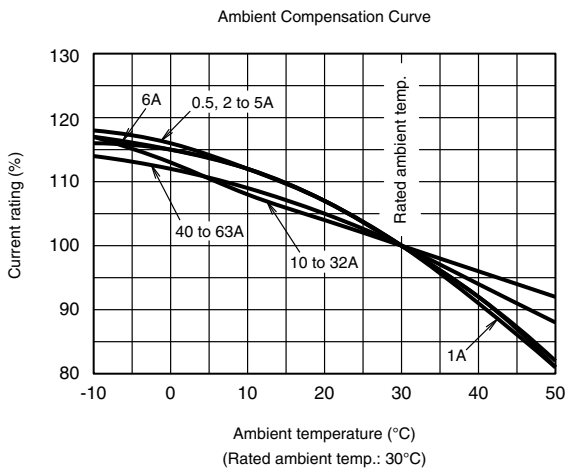

* In case of installing breakers side by side, reduce the passing current to under 80% of the rated current.

BHW-T10 (80 to 125A)

BHW-T10 (80 to 125A)

Model				BHW-T10			
Number of poles (P)				1	2	3	4
Instantaneous tripping				Type B, C			
Rated insulation voltage Ui (V)				690			
Rated current In (A)	Amb. temp.	IEC/EN 60898-1*	30˚C	80, 100, 125			
		IEC/EN 60947-2	40˚C				
Rated short-circuit capacity (kA)	IEC/EN 60898-1* (Icn)	AC	240/415V	10			
	IEC/EN 60947-2 (Icu/Ics)	AC	240/415V	10/7.5			

* This standard will be conformed shortly. Please contact our branch office for release period and more details.

Operating Characteristics

IEC/EN60898-1

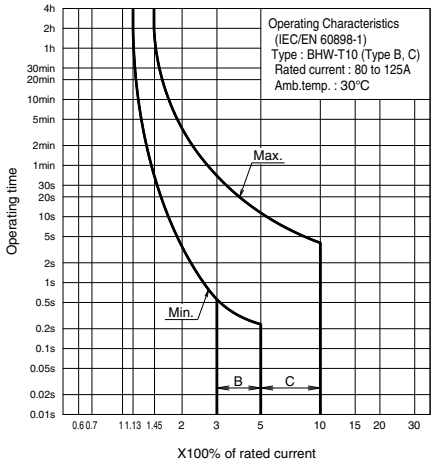

IEC/EN60947-2

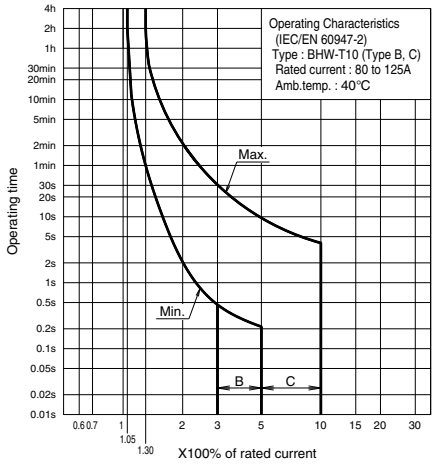

Outline Drawing

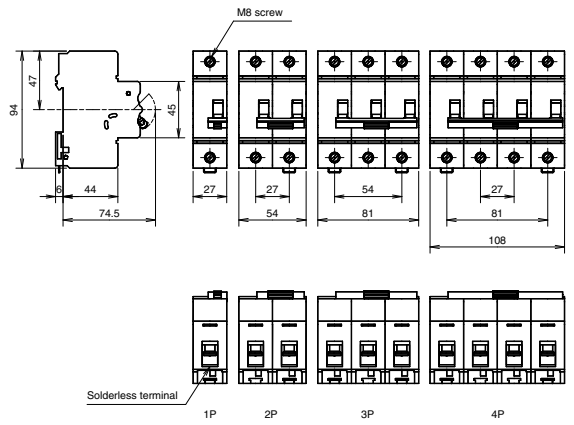

Temperature Compensation Curve

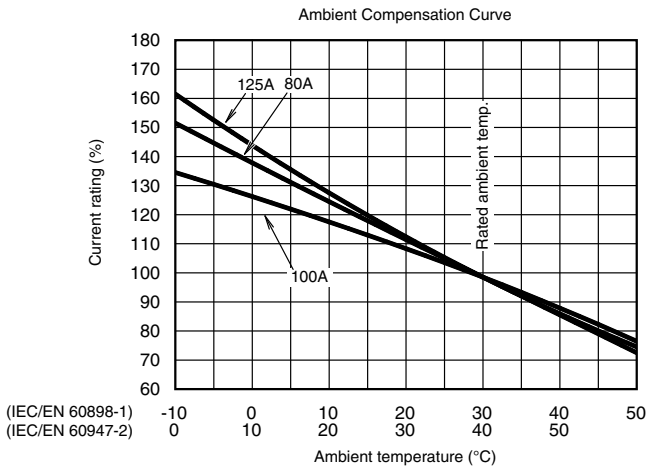

* In case of installing breakers side by side, reduce the passing current to under 80% of the rated current.

BVW-T

BVW-T

Model	BVW-T	
Number of poles (P)	2 (1+N) (*1)	4 (3+N) (*1)
Rated voltage (VAC)	240	415
Rated current I_n (A) at ambient temperature 30°C	16, 25, 32, 40, 63, 80, 100	
Rated current sensitivity $I_{\Delta n}$ (mA)	30, 100, 300	
Max. operating time at 5 $I_{\Delta n}$ (s)	0.04	
Pulsating current sensitivity	Type AC	
Residual operation	Independent of line voltage	
Rated making and breaking capacity I_m (A)	500 (In 16, 25, 32, 40A), 630 (In 63A), 800 (In 80A), 1000 (In 100A)	
Rated conditional short-circuit current I_{nc} (kA)	10	
Rated residual making and breaking capacity $I_{\Delta m}$ (A)	500 (In 16, 25, 32, 40A), 630 (In 63A), 800 (In 80A), 1000 (In 100A)	
Rated conditional residual short-circuit current $I_{\Delta c}$ (kA)	10	

Note *1 N pole is a switched neutral pole (without overcurrent release device).

Operating Characteristics

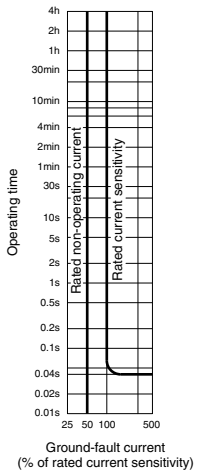

Outline Drawing

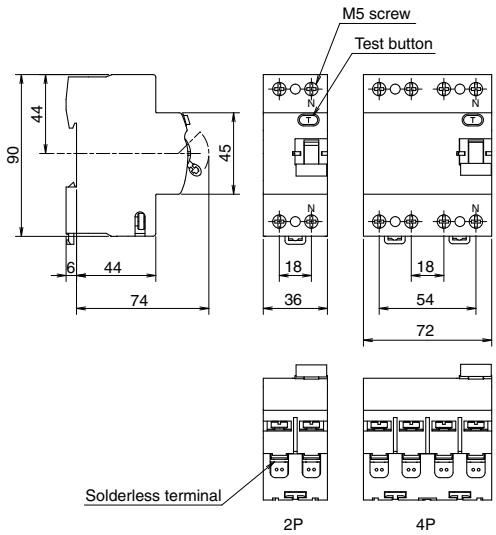

KBW-T

KBW-T

Model	KBW-T						
Number of poles (P)	1	2	3	4	2	3	4
Utilization category	AC-22A				AC-22A		
Rated insulation voltage Ui (V)	660				660		
Rated voltage Ue (VAC)	240	240/415			240/415		
Rated current In (A) at ambient temperature 30˚C	25, 40, 63				80, 100, 125		
Short-time withstand current Icw (A)	12×In, 1s				12×In, 1s		
Short-circuit making capacity Icm (A)	12×In				12×In		

Outline Drawing

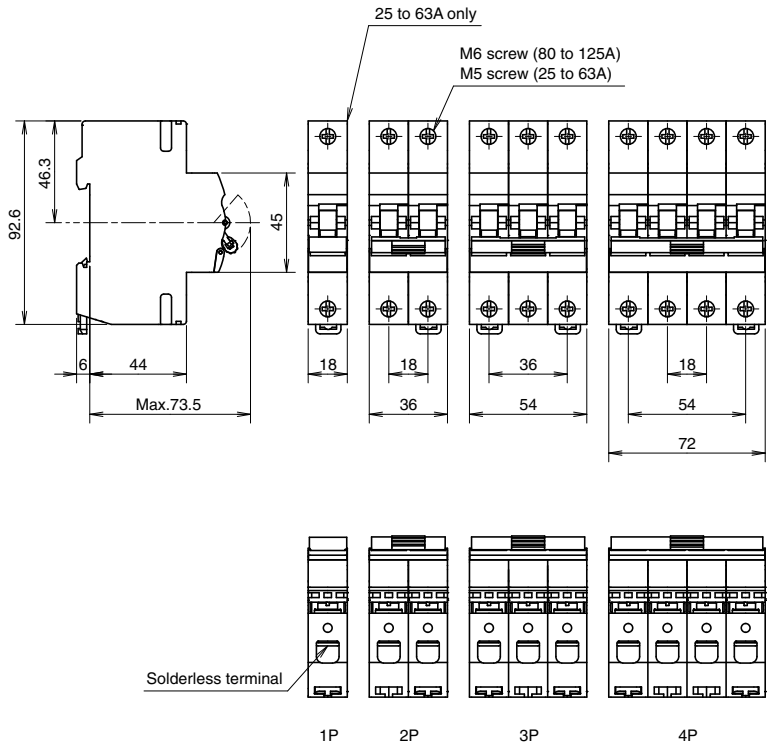

MEMO

CP30-BA

CP30-BA

Frame (A)				30		
Model				CP30-BA		
Number of poles				1	2	3
Rated impulse withstand voltage Uimp (kV)				2.5		
Rated current (A)				0.1, 0.25, 0.3, 0.5, 1, 2, 3, 5, 7, 10,15, 20, 30		
Rated short-circuit capacity (kA)	UL 1077 CSA C22.2 No.235	Rated voltage (V)	AC (V)	250		
			DC (V)	65	125	–
		AC		2.5kA at 250V		
		DC		2.5kA at 65V	2.5kA at 125V	–
	IEC 60934 EN 60934	Rated insulation voltage Ui (V)		250		
		AC		2.5kA at 230V		
		DC		2.5kA at 60V	2.5kA at 120V	–
	EN 60947-2 IEC 60947-2 (Icu/Ics)	Rated insulation voltage Ui (V)		250		
		AC		2.5/2.5kA at 230V		
		DC		2.5/2.5kA at 60V	2.5/2.5kA at 120V	–
AC-DC common use				●		–
Operating characteristics				Instantaneous type (I) Medium type (M),(MD) Slow type (S),(SD) Fast type (F)		
Mode of tripping				Instantaneous type (I): magnetic only Other type (M, MD, S, SD, F):hydraulic-magnetic		

Operating Characteristics

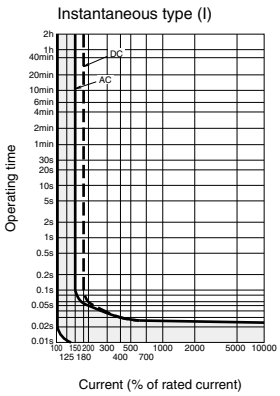

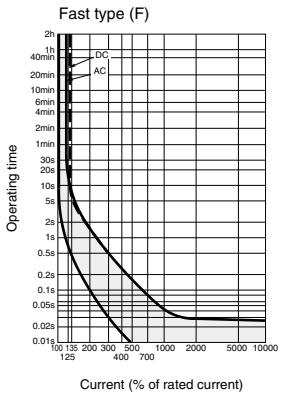

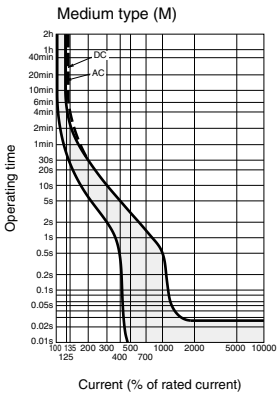

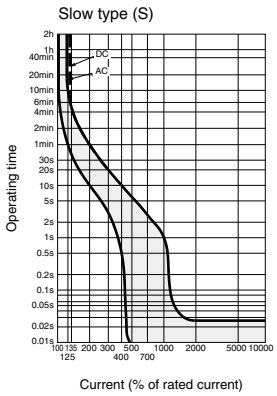

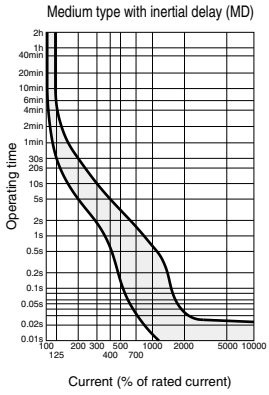

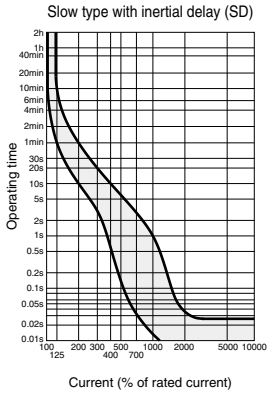

Outline Drawing

•CP30-BA

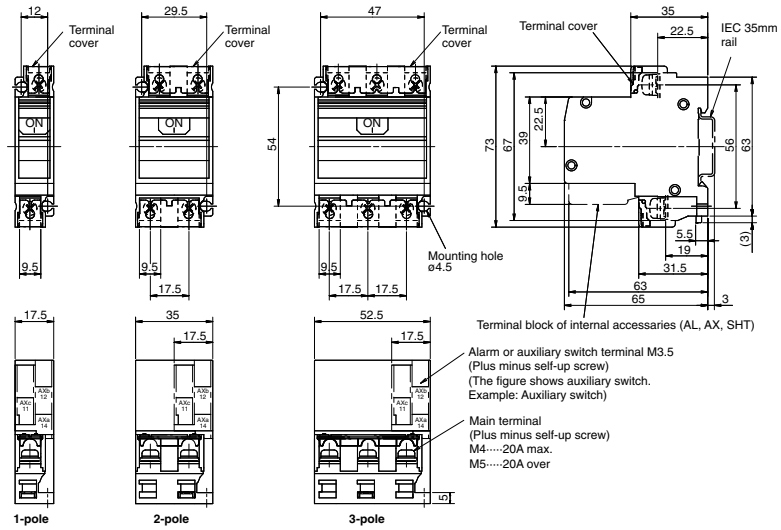

Mounting dimension

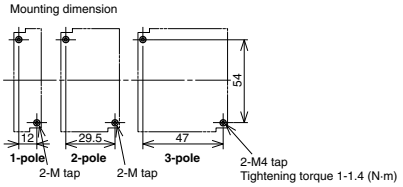

Temperature Characteristics Curve

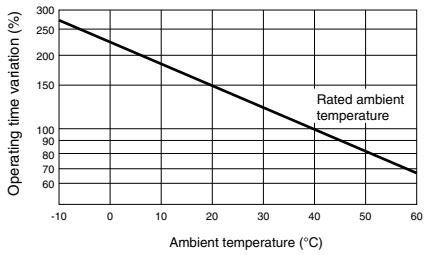

(1) Dimensions of electrical operated circuit breakers

The following concept is applied for the dimensions of the electrical operated circuit breaker. Please understand this before using this type of breaker.

Connection method	Outline dimensions listing method
Front connection (Rear connection)	
Rear connection Plug-in	The drilling dimensions and connection related dimensions are the same as the dimensions for the breaker body. Refer to the dimension drawings of each model. Note that for the rear connection type, four mounting holes are required even for the 2-pole or 3-pole types.

Model	Listed page	Model	Listed page
NF125-CV/SV/HV NV125-CV/SV/HV	229	NF400-CW/SW/SEW/HEW/REW NF630-CW/SW/SEW/HEW/REW NF400-UEW (3P) NV400-CW/SW/SEW/HEW/REW NF400-UEW (4P) NV630-CW/SW/SEW/HEW	230
NF125-UV	(*1)		
NF125-SEV/HEV/RV/ZEV NF250-CV/SV/HV/SEV/HEV NF250-RV NF125-SGV/LGV/HGV/RGV NF160-SGV/LGV/HGV NF250-SGV/LGV/HGV/RGV NV125-SEV/HEV NV250-CV/SV/HV/SEV/HEV	230	NF800-CEW/SEW/HEW/REW/SDW NF800-UEW NV800-SEW/HEW	231
		NF1000-SEW, NF1250-SEW/SDW NF1600-SEW/SDW	232
NF250-UV	(*1)		

(2) Front connection (Rear connection)

NF125-CV, NF125-SV, NF125-HV
NV125-CV, NV125-SV, NV125-HV

Front connection

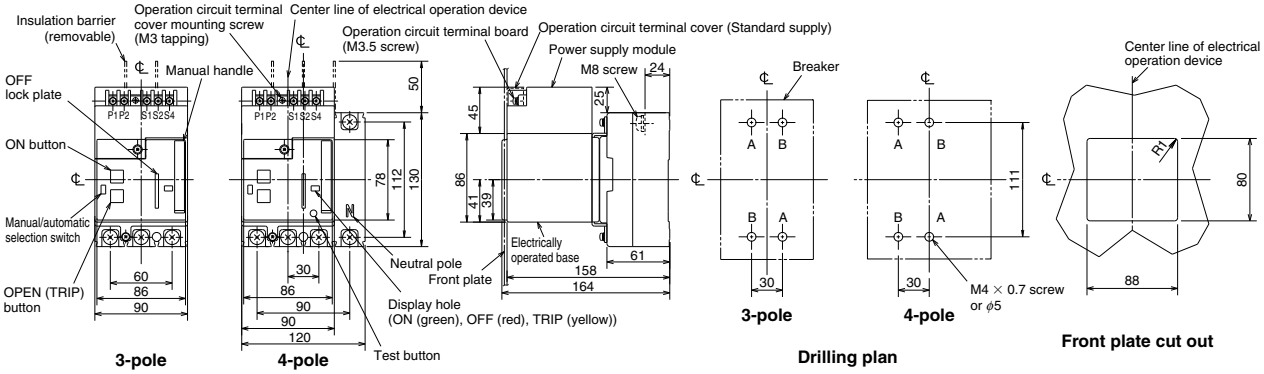

Remarks: 1. This cannot be mounted on the 2-pole breaker.
2. The test button is equipped only on the earth leakage circuit breaker.

NF125-SEV, NF125-HEV, NF125-RV
NF250-CV, NF250-SV, NF250-HV, NF250-SEV, NF250-HEV, NF250-RV
NV125-SEV, NV125-HEV
NV250-CV, NV250-SV, NV250-HV, NV250-SEV, NV250-HEV
NF125-SGV/LGV/HGV/RGV
NF160-SGV/LGV/HGV
NF250-SGV/LGV/HGV/RGV

Front connection

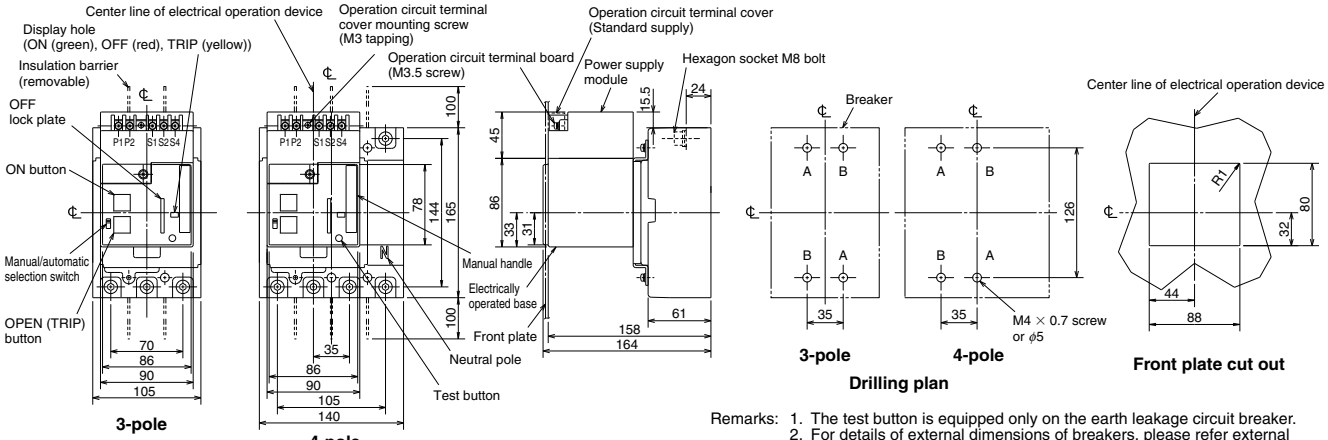

Remarks: 1. The test button is equipped only on the earth leakage circuit breaker.
2. For details of external dimensions of breakers, please refer external dimension drawing of each model.

NF400-CW, NF400-SW, NF400-SEW, NF400-HEW, NF400-REW, NF630-CW, NF630-SW, NF630-SEW, NF630-HEW, NF630-REW Motor drive type

Front connection

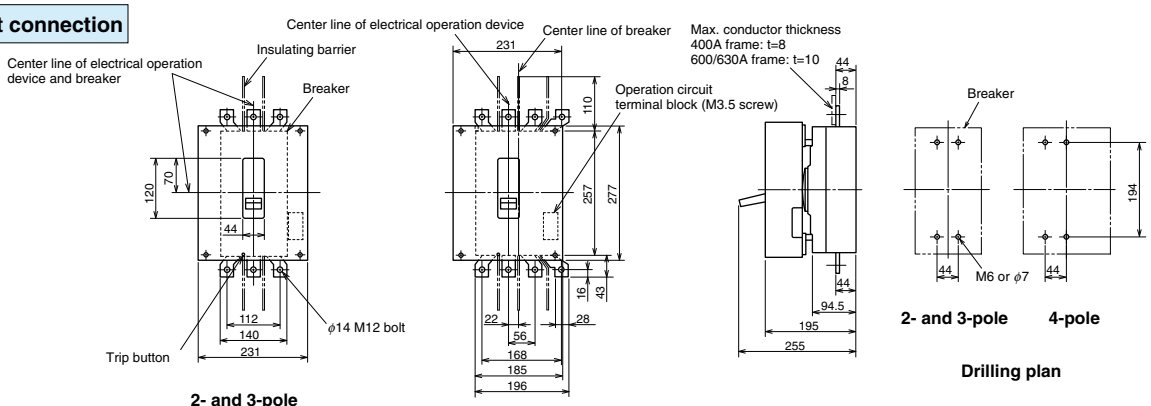

Remark: 1. 2-pole models are 3-pole with the central pole conductor removed.

NF400-UEW (3-pole) Motor drive type

Front connection

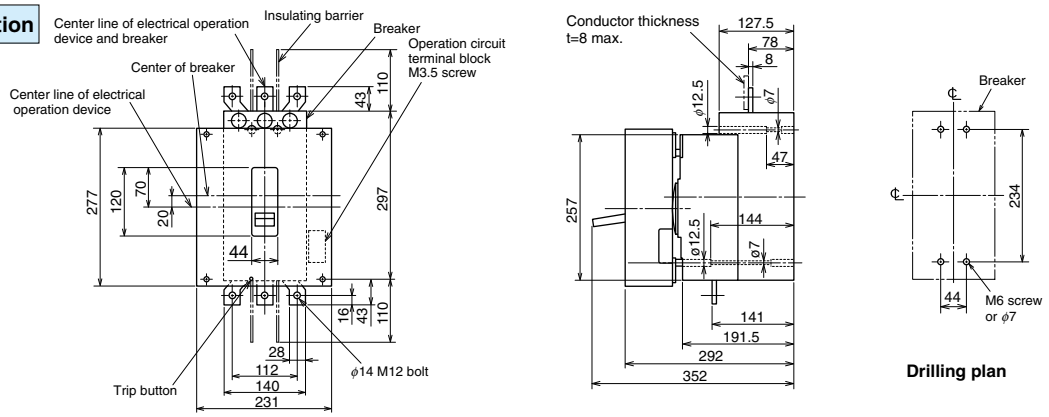

NV400-CW, NV400-SW, NV400-SEW, NV400-HEW, NV400-REW, NV630-CW, NV630-SW, NV630-SEW, NV630-HEW Motor drive type

Front connection

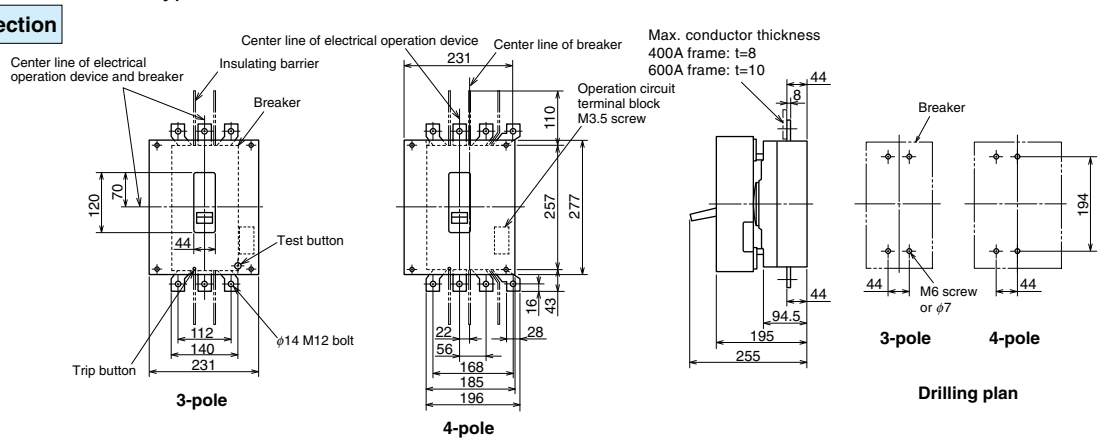

NF400-UEW (4-pole) Motor drive type

Front connection

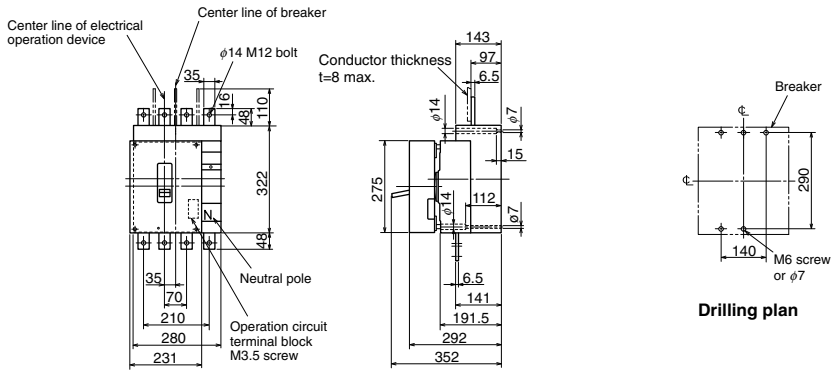

NF800-CEW, NF800-SDW, NF800-SEW, NF800-HEW, NF800-REW Motor drive type

Front connection

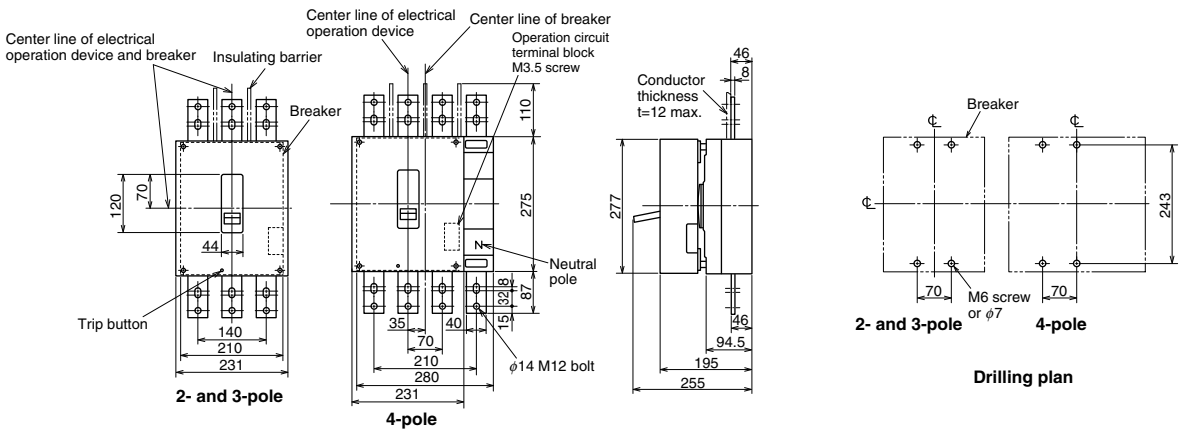

Remark: 1. 2-pole models are 3-pole with the central pole conductor removed.

NF800-UEW Motor drive type

Front connection

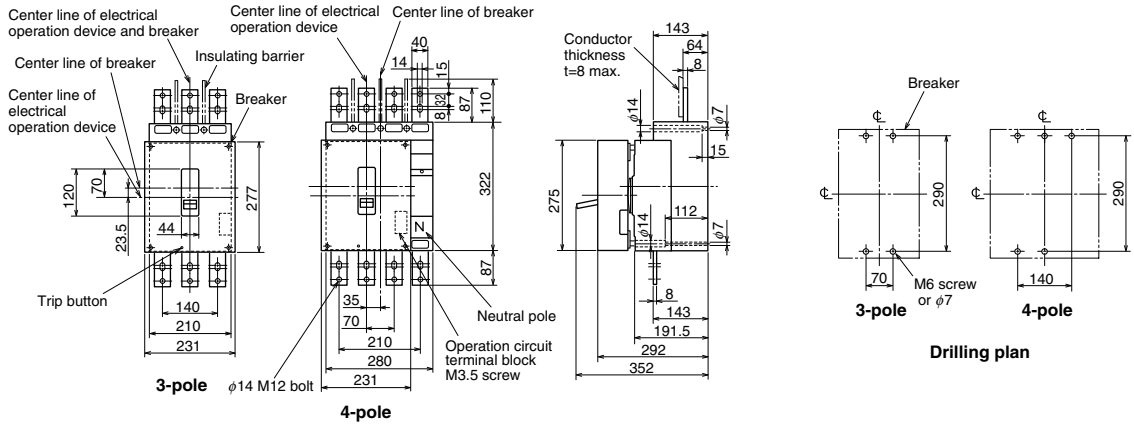

NV800-SEW, NV800-HEW Motor drive type

Front connection

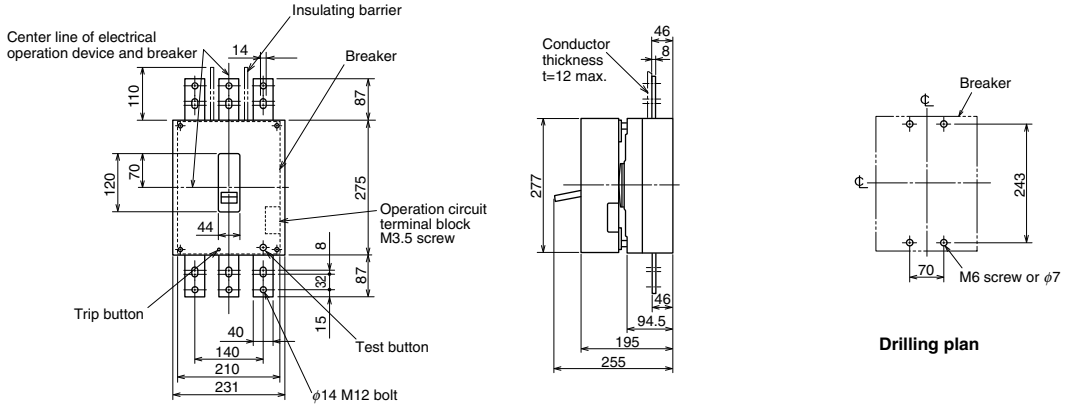

NF1000-SEW, NF1250-SEW, NF1250-SDW Motor drive type

Front connection

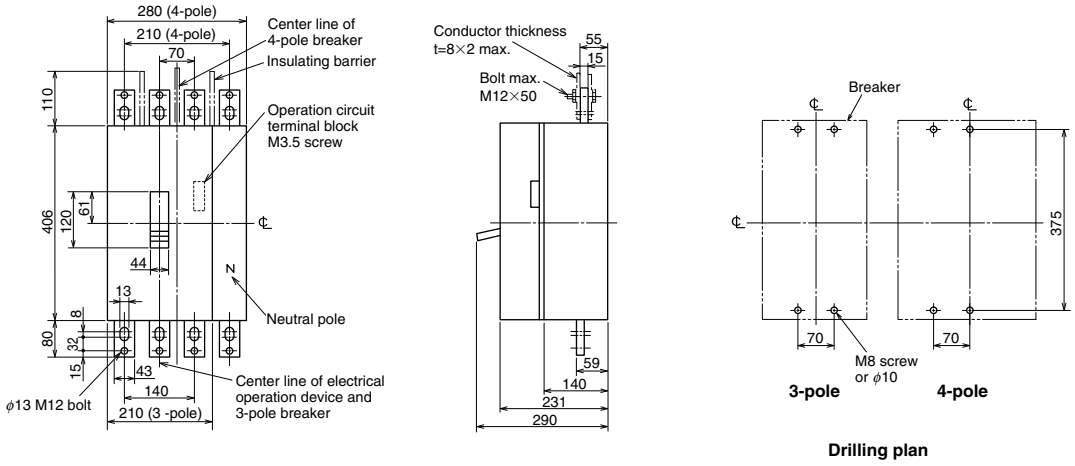

Remark: 1. 2-pole models are 3-pole with the central pole conductor removed.

NF1600-SEW, NF1600-SDW Motor drive type

Front connection

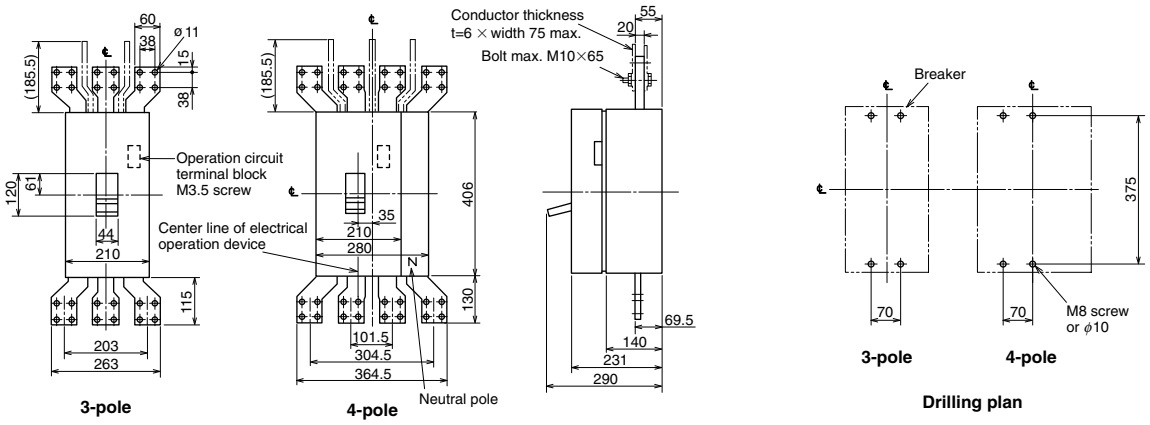

NF1600-SEW (3-pole) Motor drive type

Rear connection

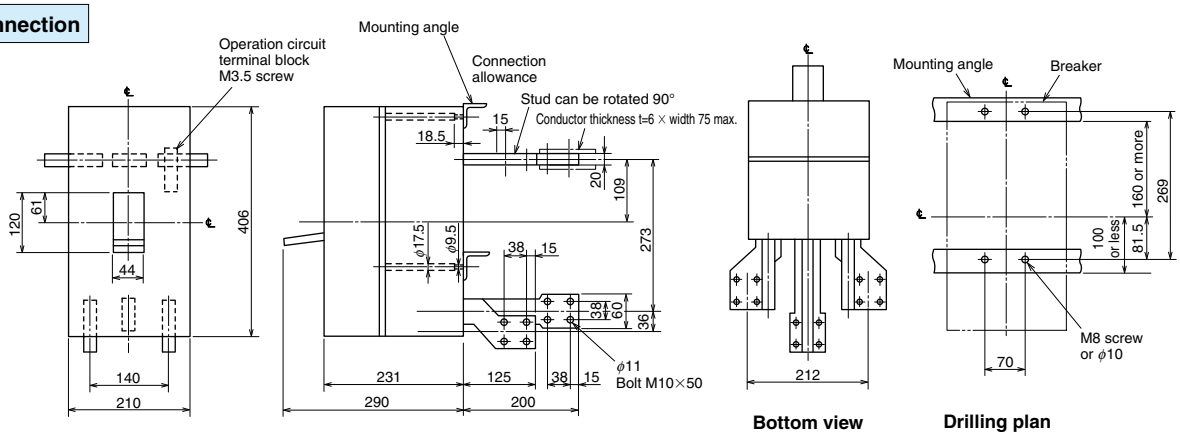

NF1600-SEW (4-pole) Motor drive type

Rear connection

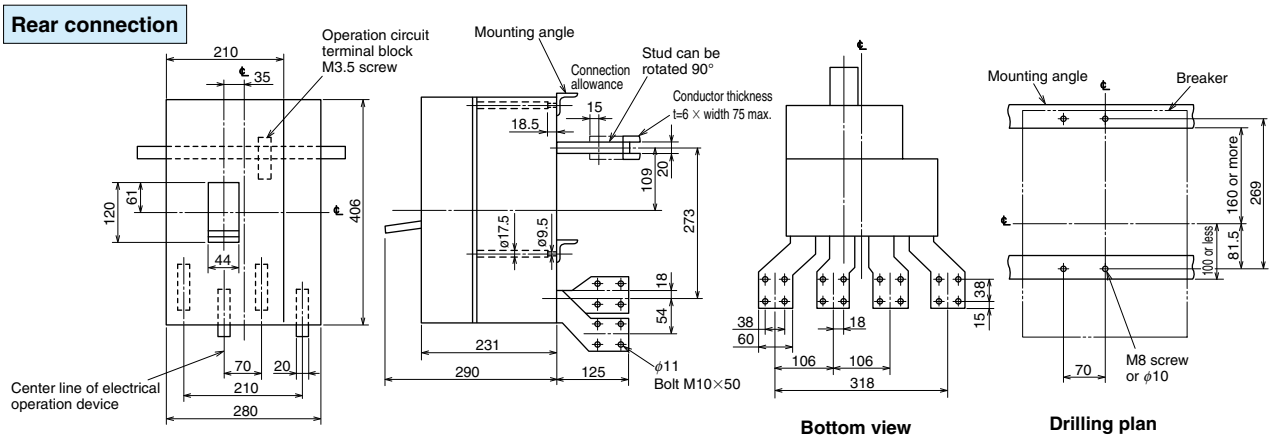

NF1600-SDW (3-pole) Motor-drive type

Rear connection

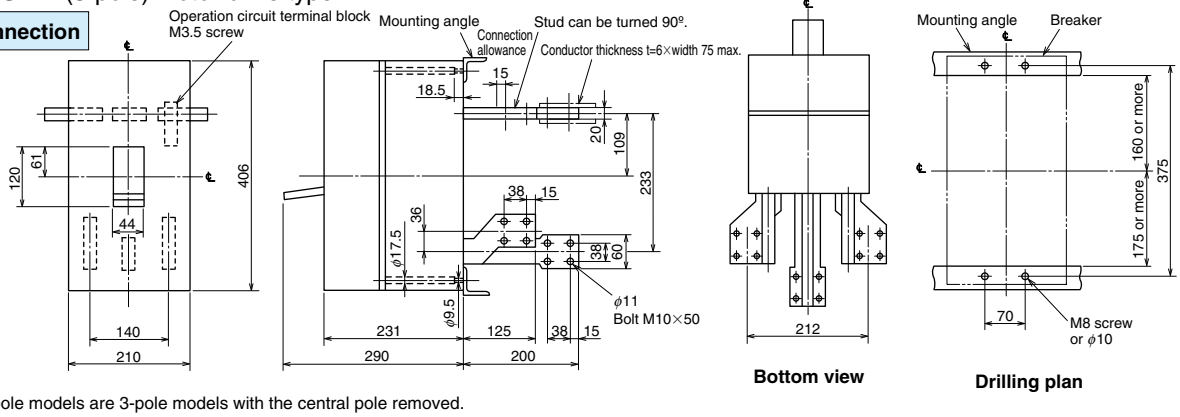

Remark: 2-pole models are 3-pole models with the central pole removed.

NF1600-SDW (4-pole) Motor-drive type

Rear connection

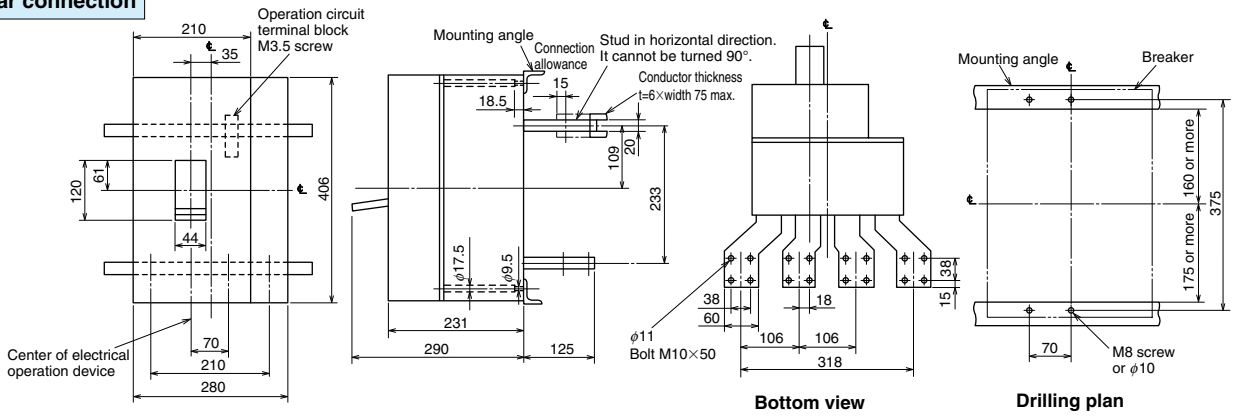

MEMO

8

Handling and Maintenance

1) Storage and Transportation 238
2) Standard Working Conditions 238
3) Mounting and Connections 238
4) Maintenance and Inspections 240
5) Troubleshooting 242

1. Storage and Transportation

(1) Precautions for storage

Avoid corrosive gases	Store in the OFF or tripped state	Avoid moisture
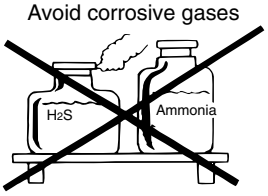 Do not store the product in an atmosphere containing acidic gas or ammonia gas. H_2S 0.01ppm or less SO_2 0.05ppm or less NH_3 0.25ppm or less	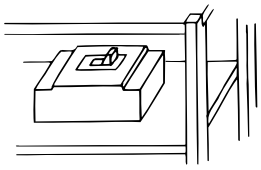 Store the breaker in the OFF state or tripped state.	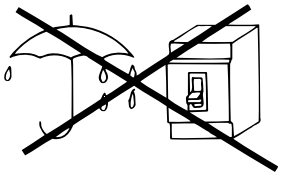 Do not leave the breaker in a humid place for long periods of time.

(2) Precautions for transportation

Carefully pack and transport	Do not carry by holding the front and back of the flush plate	Do not carry by the lead wires	Do not transport upside down (when mounted on IEC 35mm rail)
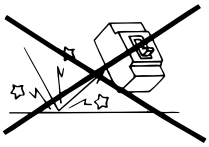 Do not drop the package during transportation. When shipping the breaker, make sure to package it carefully.	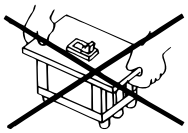 Do not carry the embedded type breaker by holding the front and back of the flush plate. The breaker could drop during transportation.	Do not carry the accessories by the lead wires. Excessive force will be applied on the accessories.	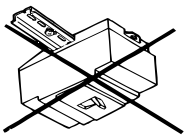 Do not transport a panel containing parts mounted on an IEC 35mm rail in an upside down state.

2. Standard Working Conditions

- Working ambient temperature … -10°C to 40°C
  (Note that the 24-hour average value must not exceed 35°C)
  working current reduction rate in ambient temperature exceeding 40°C.
  50°C… 0.9 fold
  60°C… 0.7 fold
- Relative humidity … 85% or less with no dew condensation.
- Altitude … 2000m or less
- Atmosphere … Free of excessive moisture, oil vapors, smoke, dust, salt, corrosive substances, vibration or impact, etc.

3. Mounting and Connections

(1) Precautions for mounting

Attention to dust and cutting chips!	Do not block ventilation ports	Avoid direct sunlight	Do not remove the rear cover
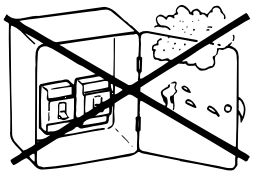 Make sure that the breaker does not come in contact with rain water, oil, dust or cutting chips. Special attention must be taken to conductive materials such as scraps from drilling steel plates.	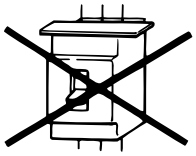 Do not block the ventilation ports. The breaker performance could drop. Ensure the insulation distance for breaker mounting indicated on page 101.	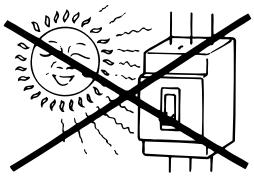 Make sure that the breaker is not subject to direct sunlight during use. An increase in temperature could cause malfunctions. Sunlight could also discolor the nameplate and molded case, etc.	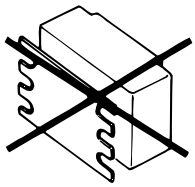 Do not remove the rear cover from the back of the base.

Mounting style

Pay attention to the mounting angle of the following models as the overcurrent tripping characteristics may vary according to the mounting stye. Use in a vertical direction is recommended.

- NF30-CS
- CP30-BA

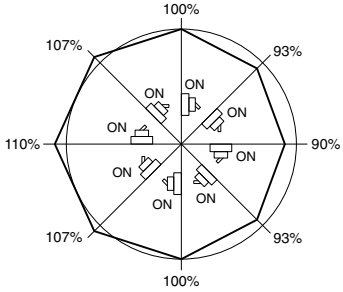

Rate of change of rated current by mounting angle

Do not wipe with thinner, detergent or chemical cloth

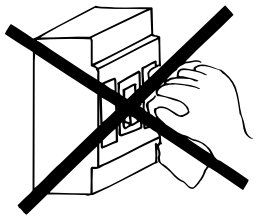

Do not use thinner, etc., to clean the surface of the breaker.
Use compressed air or a dry cloth to clean.

(2) Precautions for Connections

Oiling of threads prohibited

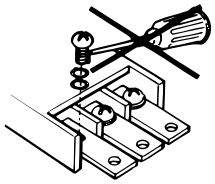

- Do not apply lubricant to the threads. Oil will decrease the friction at threads and cause the screws to loosen easily, and the unit to overheat. Excessive stress will be applied on the threads even with the standard tightening torque and can cause the screws to break.

Connect conductors parallel to each pole

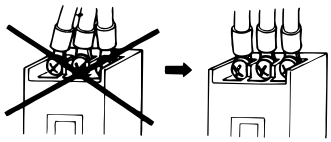

- Connect each connection conductor so it is parallel to each pole.

Do not deform studs

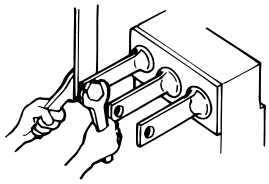

- When connecting the conductors on the rear connection type, take care not to deform the studs when tightening.

Do not connect in reverse

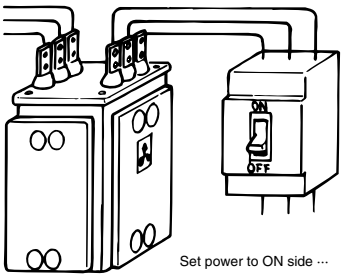

- As a rule, do not connect the power and load in reverse. If necessary, refer to the specifications and select a model which can be connected in reverse.
- An insulating barrier should be provided on both the power and load sides of the breakers when using a high voltage circuit where dew condenses easily or in a circuit which has a reverse connection in the circuit.

Securely fix conductors

- A large electromagnetic force is applied on the connected conductor according to the accident current. Use the conditions on the right as guide and securely fix (tighten) the conductors.

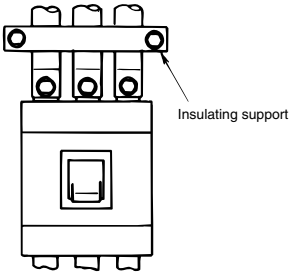

Electromagnetic force applied per 1m conductor (During 3-phase short-circuit)

Current target value kA(Pf)	Distance between conductors cm	10	20
10	(0.4)	490	245
18	(0.3)	1860	930
25	(0.2)	4410	2205
35	(0.2)	8720	4360
42	(0.2)	12545	6270
50	(0.2)	17835	8920
65	(0.2)	30185	15090
85	(0.2)	51550	25775
100	(0.2)	71540	35770
125	(0.2)	111720	55860

Bar Connection

- When directly connecting the conductor, refer to the outline drawings and drill the conductor.
- When connecting the conductors to a bar terminal, pay attention to the insulating distance with the ground. A ground fault prevention barrier is available as an option.

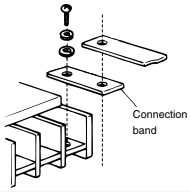

Wire retention type connection

- When directly connecting to the terminal, insert the single strand or stranded wires in straight and then tighten.
  A commercially-available crimp terminal or bar can be connected directly.
- When using stranded wires, split them and then tighten.

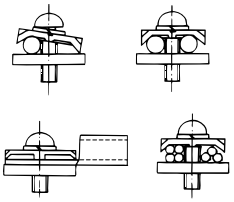

ELCB (NV) connection

- When using a single-phase 3-wire method, connect the neutral pole to the NC's center pole.

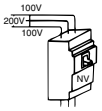

- When using a 3-pole ELCB with a single-phase 2-wire, connect to the left and right poles (poles at both sides) of ELCB.

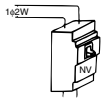

- Never connect the ELCB units in parallel as it will create a loop circuit, and could burn the magnetic device.
- Never connect the MCCB and ELCB in parallel.

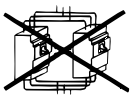

Solderless terminal connection

- Untwist the connection wires, align the core wires and then tighten.
  The wires will loosen up during use, and must be tightened during periodic maintenance.
- Do not solder or bind the end of the strands.
- Make sure not to catch the insulating sheath of the wire when tightening.

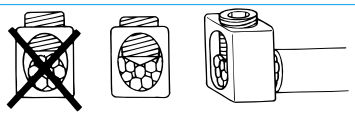

4. Maintenance and Inspections

(1) Initial inspections

After installing the MCCB and ELCB, inspect the following matters before powering the units.

Model	Inspection items	Criterion	Remarks
Common	1. Are there any excessive screws, drilling scraps, wire scraps or any other conductive materials around the terminals?	All conductive material must be removed.	
	2. Are there any cracks or damage on the cover or base?	No cracks or breaks allowed.	
	3. Is there any dew condensation on the cover, base or terminals?	No dew condensation allowed.	
	4. Measure the insulation resistance with a 500V insulation resistance tester.	5MΩ or more	Refer to Precautions ② for the ELCB.
	5. Are the connector connections tightened securely?	Must be specified tightening torque.	
ELCB	6. Are the ELCB rated voltage and circuit voltage the same?	Voltages must be the same.	
	7. Apply voltage, press the test button and check the operation.	Must trip with an earth leak.	

Precautions

①**Withstand voltage test**

A guide for the test is given on the following. Do not perform a withstand voltage test exceeding these levels. (Note) Test the operating circuit between the live section and ground.

(Application time: one minute) (Unit: V)

Main circuit		Auxiliary circuit or control circuit	
Rated insulation voltage	Test voltage (effective value for alternating current)	Rated insulation voltage of operating circuit	Test voltage (effective value for alternating current)
$U_i \leqq 300$	2000	$U_{is} \leqq 60$	1000
$300 < U_i \leqq 690$	2500	$60 < U_{is} \leqq 690$	$2U_{is}+1000$ (min. 1500)

②**Insulation resistance measurement and withstand voltage test**

The restrictions a and b apply to the following models.
Applicable models: Earth leakage circuit breaker, Measuring display unit breaker.

Measurement position \ Test			Insulation resistance measurement		Withstand voltage test	
State of handle			ON	OFF	ON	OFF
Between live section of main circuit and ground			○	○	○	○
Between different poles	Line side	Between left - middle, middle - right, left - right poles	△	○	×	○
		Between left - neutral pole, middle - neutral poles right - neutral poles	(*1) ○ (△)	○	(*1) ○ (×)	○
	Load side	Between left - middle, middle - right, left - right poles	△	△	×	×
		Between left - neutral poles, middle - neutral poles right - neutral poles	(*1) ○ (△)	(*1) ○ (△)	(*1) ○ (×)	(*1) ○ (×)
Between power - load side terminals			–	○	–	○
Between main circuit live sections - operating circuit live sections			○	○	○	○
Between operating circuit live section - ground			○	○	○	○

Note *1 Values in parentheses apply for measuring display unit breaker.

(2) Periodic inspections

To prevent trouble and ensure the breaker operates safely for a long time, inspect the breaker one month after starting use and periodically thereafter according to the environmental conditions.

Inspection Interval Guide

1	Clean and dry environment	Once every 2 to 3 years
2	Environment with low levels of dust, corrosive gas, vapors, salt, etc.	Once a year
3	Places other than 1 or 2	Once every six months

Model	Inspection items	Criterion	Remarks
Common	1. Are any of the conductors loose?	No conductor must be loose.	If any conductor is loose, tighten again with the appropriate torque given in Tables 5-5 and 5-6 on pages 97 to 98.
	2. Is any cover or base cracked? Is any handle damaged?	There must be no cracks, damage or breaks.	
	3. Has the breaker been submerged and infiltrated with water? Is the breaker heavily dirtied by mud or dust?	There must be no infiltration of water, heavy mud or dust.	If water has infiltrated the breaker, it must be replaced with a new part or overhauled by the Mitsubishi Service Center.
	4. Has the temperature risen abnormally?	(1) Visually inspect that none of the studs on the backs of the terminals, or the breaker's tightened or molded sections are discolored from burning. (2) There must be no especially high temperature rise when the current at each phase is balanced. (Tolerable maximum value for terminal temperature rise: 60K) (3) There should be no difference on the left and right side of the base sides if the load current is balanced.	There may be a light temperature difference between the following terminals. ● Between the power side terminal and load side terminal ● Between the center pole terminal and left and right pole terminals.
	5. Can the handle be turned ON and OFF smoothly?	Should operate smoothly.	Open and close a normally closed breaker periodically. This will clean the contact and prevent abnormal heating.
	6. Does pressing the TRIP button result in a trip?	Must be resettable after tripping.	
NV	7. Test by pressing the TEST button.	Must operate properly and close again.	Test the operation once a month.

(3) Inspection after Tripping

Whether the circuit breaker can be reused or must be replaced after switching off a fault current depends on the intensity of the current which was switched off.

Intensity of trip current, degree of MCCB and ELCB damage, and countermeasures

Intensity of trip current	Degree of MCCB and ELCB damage	Countermeasures
When it is clear that the circuit breaker operated within the time-delay trip range (Overcurrent up to 10 times of rated current)	No abnormality such as contamination around vent observed	Reusable (The circuit breaker can function 50 times (100A or less) at overload current which is 6 times higher than rated current)
Relatively low short-circuit current which causes instantaneous tripping ↕ Large short-circuit current close to rated breaking capacity	Soot and dust found near vent ↕ Soot and dust found near handle, remarkable contamination found near vent Molten metal found in circuit breaker Box of box type circuit breaker is severely deformed	Reusable ↕ Replace with a new part

If the intensity of the fault current cannot be estimated, remove the MCCB and ELCB, and measure the insulation resistance. If the specified value (5MΩ) has not been reached, perform a withstand voltage test. If the withstand voltage is within the specified value, the circuit breaker can be used temporarily but it should be replaced with a new part as soon as possible. If both the insulation resistance and withstand voltage are sufficient, the circuit breaker may be judged as reusable. However, it should be checked for abnormalities, such as an abnormal rise in temperature for a set period.

- Measure the insulation resistance and perform the withstand voltage test with the procedures given in section 1 and 2 on page 244.
- Check that the ELCB operates when the test button is pressed.

(4) Guide to service life

Maintenance and inspection must be conducted according to the environment in which the circuit breaker is installed.
The service life of the circuit breaker cannot be determined just by the number of service years.
A reference to the service life is given below, but the circuit breaker must be diagnosed by a specialist for an accurate reading.

Guide to service life

Degree		Environment	Example	Guide for replacement (years)
Standard usage state	1	Place where air is always clean and dry	Dust-proof and air-conditioned electrical room	Approx. 10 to 20
	2	Indoors, where there is little dust and no corrosive gas	Circuit-breakers housed in distribution panels or boxes within an individual electric room having no dust-proofing or air-conditioning	Approx. 7 to 15
Poor environment	1	Place with gases such as sulfuric acid, hydrogen sulfide, salt and high levels of moisture, but low levels of dust	Geothermal power house, sewage treatment plans, iron and steel works, paper and pulp plants, etc.	Approx. 3 to 7
	2	Place with high levels of gas and dust which humans cannot endure for long periods of time	Chemical plants, quarries, mines, etc.	Approx. 1 to 3

Standard	Size of circuit breaker frame (A)	Number of operating cycles (times)			Number of tripping times by shunt tripping device or undervoltage tripping device, or by trip button
		Energization	No energization	Total	
JIS C 8201-2-1 Ann.2 JIS C 8201-2-2 Ann.2 JIS C 8201-2-1 Ann.1 JIS C 8201-2-2 Ann.1 IEC 60947-2 (*1)	100 or less	1500	8500	10000	10% of total operating cycles
	More than 100, 315 or less	1000	7000	8000	
	More than 315, 630 or less	1000	4000	5000	
	More than 630, 2500 or less	500	2500	3000	
	More than 2500	500	1500	2000	

Note *1 The number of trips by the ELCB test button is one-third the number of energizations.

The operating life shortens as the circuit breaker frame size increases. (Refer to above tables.)
These values may seem low, but since this circuit breaker is a protective device, it basically differs from a switch intended for frequent opening and closing.
For tripping by a shunt tripping device, the life is especially short and special consideration should be taken.

⚠ WARNING Continuing user of a circuit breaker which has reached its service life can result in the following problems. Always update the circuit breakers accordingly.

① Insulation fault: Risk of burning, internal short-circuit, and electric shock.
② Energizing fault: Burning or unnecessary operations caused by overheating of the internal parts, etc.
③ Operation fault: ON and OFF operation of the circuit may be disabled.
④ Tripping fault: Protection of the load device or wiring, etc., may be disabled.

⚠ CAUTION When the operating endurance exceeds the specified value, the above faults could occur or the internal conductor could break, overheat or burn.

5. Troubleshooting

(1) Troubleshooting for breaker unit (MCCB, ELCB)

Fault state			Cause		Countermeasures and Actions
Operation errors	Can't close		Foreign matter in switching mechanism		Remove the foreign matter
			Breaker hasn't been reset		Reset again
			Breaker can't be reset	See below(*)	See below
	(*) Can't reset Can't trip Can't turn OFF		Wear due to tripping endurance	Excessive use of shunt trip operation	Replace with new part. Change shunt trip to electric operation
				End of service life	Replace with new part
			Reset mechanism is faulty	Improper adjustment	Return for repairs
			Undervoltage coil is not excited	Careless operation	Excite the coil
			Resetting time has not elapsed		Wait for bimetal to cool down
			Switching spring is broken or fatigued	Breakage caused by initial trouble	Return for repairs
				End of service life	Replace with new part
			Contact has fused because of excessive interruptive current		Replace with large capacity breaker
			Insufficient lubricant (grease)		Return for repairs
Broken handle			Excessive power during operation		Replace handle
			Positional relation of external operation handle and breaker is poor		Replace handle
					Correct positional relation
Poor energizing			Foreign matter caught between contacts		Remove foreign matter (if cover is removable)
					Return for repairs (if cover is not removable)
			Fusion at conductive section	Excessive interrupting current	Replace with new part having large interruptive capacity
			Excessive wear of contacts	Short-circuit current cut off End of service life	Replace with new part
Broken rated changeover screw			Excessive tightening torque (Tighten with 0.3 to 0.45N·m)		Return for repairs
Annoying operation	Operates under normal load		Ambient temperature is high	Incorrect selection (temperature compensation)	Change the selection
				Panel is sealed	Ventilate
			Excessive temperature rise	Loosening at terminal connections	Tighten
			Load current contains high levels of high-frequency distortion		Insert a reactor and decrease distortion factor
			Measuring instrument is reading small measurement values because of distorted current		Correctly specify the rated values by using real meters with effective value
		Electronic type: Overcurrent indicator LED is ON	Rated current setting value is too low		Correct the rated current setting
			Rated current changeover screw was not tightened		Correctly tighten the rated current changeover screw Tightening torque 0.3 to 0.45N·m
			Failure of rated current changeover section		Return for repairs
	Malfunctions when starting		Heating caused by repeated starting current	Incorrect selection	Replace with breaker having higher rating
			Long starting time	Incorrect selection	Replace with breaker having higher rating
	Momentarily functions when starting		Starting current is too high		Change the instantaneous setting or replace with breaker having higher rating
			Starting rush current is too high		Change the instantaneous setting or replace with breaker having higher rating
			Excessive current during delta-star starting changeover Excessive current due to reversible operation		Change the instantaneous setting or replace with breaker having higher rating
			Rush current during instantaneous restart		Change the instantaneous setting or replace with breaker having higher rating
			Rare short-circuit of motor		Repair the motor
			Bimetal reset incomplete after instantaneous tripping		Allow to properly reset
			Abnormal current passed simultaneously with closing (short-circuit closing)		Inspect the circuit and remove the cause
	Operates during use		Antenna for transceiver (5W or higher) was seated against electronic type MCCB body during transmission		Use the transformer at least 1m away from the electronic type MCCB
Short-circuit on power side			Dust is accumulated		Remove the cause or replace with new part
			Conductive matter has dropped into power side		Remove the cause or replace with new part
Temperature rise	Terminal temperature is high		Improper tightening	Improper maintenance	Tighten
	Mold side temperature is high		Complete electromagnetic type being used at a high frequency (400Hz, etc.)		Replace with breaker having suitable frequency
			Load current contains high levels of high-frequency distortion		Insert a reactor and decrease distortion factor
			Incorrect measurement resulting from touch		Measure with a measuring instrument
	Heating at stud tightening section		Studs are loose		Tighten
			Contact fault between stud conductor and body terminal		Reassemble the stud
			Groove to reduce overcurrent heating not grooved on rear connection type's steel mounting plate (400A frame and larger)		Machine grooves to reduce overcurrent heating
No operation	No tripping at overcurrent		Selected rated current is too high		Replace with a breaker having a lower current
			Applied frequency is incorrect		Replace with breaker having suitable frequency
			Backup breaker has tripped	Backup breaker's instantaneous tripping current is too low	Lower the instantaneous electromagnetic setting Raise the electromagnetic setting for the backup breaker, or change the rating
Does not operate with tester (electronic type MCCB)	Overcurrent indication LED does not turn ON, or turns ON and then OFF before specified time		Breaker tester's battery is spent		Replace the breaker tester's battery
	Overcurrent indication LED turns ON and then OFF after specified time, but does not trip		Tripping mechanism is faulty		Return for repairs

(2) Troubleshooting for leakage operation section

Fault state		Cause	Countermeasures and Actions
Annoying operation	Operates simultaneously with closing (The leakage mechanism operates, such as the leakage indication button pops out)	The wiring is long creating a large ground electrostatic capacity, and causes a leakage current flow	Change the rated sensitivity current or install the ELCB near the load
		ELCB units are being used in parallel, or is incorrectly connected with a neutral wire, etc.	Use the correct wiring
	Operates during use	An excessive surge, such as inducted lightning, has infiltrated the unit	Install a surge absorber, etc., near the circuit
		Induction noise from a nearby large current bus, etc., has infiltrated the unit	Avoid sources of noise
Operation errors	Leakage operation occurs when the test button is pressed, etc., but there is not indication	LED is faulty or is at end of service life	Replace with new part
		The indicator button is improperly adjusted and does not protrude	Return for repairs
No operation	No operation takes place when the test button is pressed	Electronic circuit section is faulty	Replace with new part
		Voltage is not applied	Apply the specified voltage
		Contact continuity is faulty	Remove the foreign matter from the contact

Remarks: 1. When using a transceiver, use at least 1m away from the electronic MCCB and ELCB.

(3) Troubleshooting for accessories

Fault state		Cause		Countermeasures and Actions
NFM NVM (Electric operation device)	Operation disabled	Operation power voltage has dropped	Operation circuit wire capacity is insufficient	Use a larger operation circuit wire
			Operation power capacity is insufficient	Improve the operation power
		Resistor or motor is burned	Excessive continuous operation	Return for repairs (motor replacement)
		Connection is incorrect		Use the correct wiring
		Applied voltage is incorrect		Apply the correct operation voltage
	Continuous idling	ON and OFF circuits are operating simultaneously, operation is mistaken		Provide an interlock at the pushbutton
		For the self-holding type, the auxiliary switch contact is used for automatic reset		Use the alarm switch contact for the automatic reset contact
	One idle run when closing	Voltage ripping in the OFF state, or tripping caused by undervoltage		Turn OFF once to reset, and then turn ON again
		Breaker itself has automatically cut-off and tripped		
UVT (Undervoltage tripping device)	Closing disabled	Applied frequency or voltage is incorrect		Improve the power
		Doesn't attract	voltage drop is large	Improve the voltage
	Doesn't trip even when voltage is absent	Breaker's tripping mechanism is faulty		Return for repairs
SHT (Shunt tripping device)	Doesn't trip	Insufficient voltage	Operation voltage has dropped	Improve the power
			Applied voltage is incorrect	Improve the power
		Coil is burnt	Coil is continuously excited	Return for repairs (coil replacement, installation of burn prevention auxiliary coil)
			Operation voltage has dropped causing continuous excitation	Return for repairs (coil replacement), improve power
			Burn preventing auxiliary contact is faulty	Return for repairs (coil replacement, contact repair)
			Abnormal voltage is applied	Return for repairs (coil replacement)
AL (Alarm switch) AX (Auxiliary switch) EAL (Earth leakage alarm contact) TBM (Test button module) PAL (Pre-alarm)	Malfunction	Contact fault caused by overcurrent		Return for repairs
		Incorrect connection	Connection mistaken during installation	Refer to nameplate and correct the wiring
		Microload	Incorrect selection	Return for repairs (replacement with type for microloads)
		Loose mounting screws	Insufficient tightening Vibration during transportation	Return for repairs (readjustment)

(4) Cases of unnecessary ELCB operation

Even if the ELCB is not faulty, there may be a problem in the circuit which causes frequent operation or instantaneous operation at closing. Refer to the following section and incorporate it as part of the circuit inspection and troubleshooting.

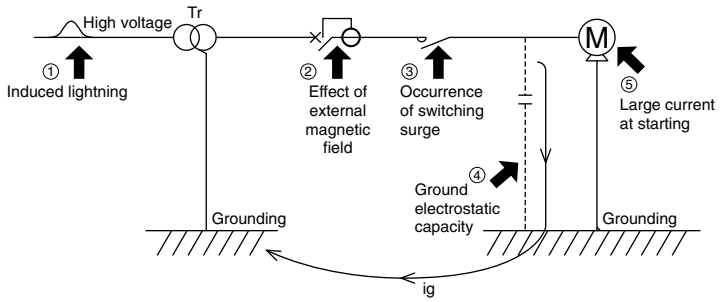

The following five conditions are the most conceivable causes of trips in cases such as when the breaker trips immediately after the ELCB is closed, or when the breaker trips suddenly during use but inspection of circuit shows no ground fault accidents. Check each item and if any problems are found, correct them accordingly.

Cause	Countermeasures
1 Induction lightning	All models incorporate a non-operating shock structure and should sufficiently withstand 7kV (JIS Standards), so unnecessary operation should not occur.
2 External magnetic field	The ZCT is equipped with a magnetic shield, and is not affected easily. However, the breaker could operate if there are large current buses reaching several thousand amperes near the ELCB, or if there is a short-circuit fault in nearby circuit. Separate the ELCB from the large current bus wires by at least 10cm.
3 Switching surge	All models incorporate a non-operating shock structure and should not operate unnecessarily. However if there is a time lag in the closing time of each pole in the magnetic switch, unnecessary operation could occur due to the relation of the ground electrostatic capacity.
4 Effect of ground electrostatic capacity	If the wires are stored in a metal conduit or metal duct wiring, the ground electrostatic capacity will increase compared to other wiring methods. This may cause the leakage current to constantly increase. If the magnetic switch chatters, etc., the leakage current may become temporarily unbalanced thus reaching a leakage current equivalent to the sensitivity current and causing unnecessary operation. Review the following matters in this case. 1) Shorten the load circuit line, or install the ELCB near the load (device) being used. (Install in a branch circuit.) 2) Lead the control circuit for the control device, etc., from the power on the ELCB side. 3) If the above measures are difficult or if they cause further unnecessary operation, reconsider the selected ELCB rated sensitivity current.
5 Equilibrium properties caused by large current at starting	The ZCT is made of high-grade permalloy, a material with Ni as its main element and which has outstanding residual magnetic characteristics. The periphery of the ZCT is covered with material having outstanding magnetic characteristics, creating a complete magnetic shield. This suppresses the effect of residual currents to the minimum, and prevents the breaker from unnecessarily operating even near a current of several thousand amperes. In the relay, the characteristics change if the primary conductor is bent immediately after it is passed through the ZCT. Thus, when passing a primary conductor with current of 300A or more through the ZCT, keep the conductor straight for at least 30cm on either side.

9

Appendix

1) Handle Operation Angle Dimensions 246
2) MCCB Trip Button, Instantaneous Adjustment Dial Drilling and Terminal Cover Mounting Hole Dimensions 247
3) ELCB Button and Switch Dimensions 248
4) List of Product Weights 249
5) Switching the Adjustable Items 250
6) Breaker Mounting Screw Dimensions 253
7) List of Mold Surface Temperature-rise Values 254
8) Ordering Information 255
9) Melshort 2 257

1. Handle Operation Angle Dimensions

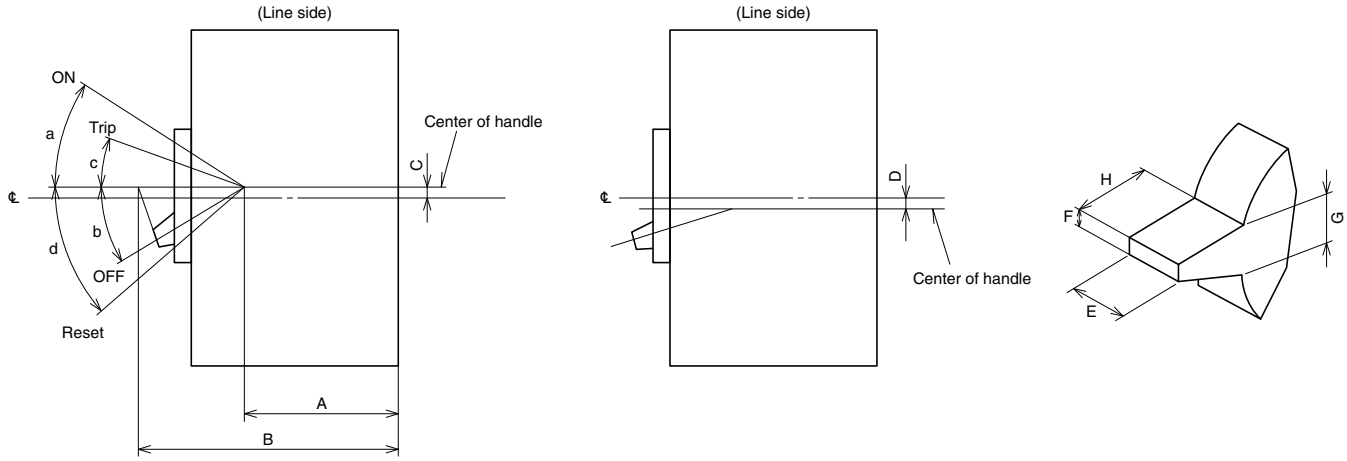

Table of dimension variations

Class	Model		Operation angle (°)				Dimensions (mm)							
			ON	OFF	Trip	Reset								
	MCCB, MCB	ELCB, RCCB, RCBO	a	b	c	d	A	B	C	D	E	F	G	H
C • S • H	NF50-SVFU	NV50-SVFU	12	20	4	27	55	90	13	–	8	5	5	14
	NF32-SV NF63-CV, NF63-SV, NF63-HV NF125-CV, NF125-SV, NF125-HV, NF125-SXV NF100-CVFU, NF125-SVU, NF125-HVU	NV32-SV NV63-CV, NV63-SV, NV63-HV NV125-CV, NV125-SV, NV125-HV NV100-CVFU, NV125-SVU, NV125-HVU	15	19	5	21	40	90	2	–	12	7	7	17
	NF125-LXV, NF125-HXV NF125-SEV, NF125-HEV NF250-CV, NF250-SV, NF250-HV NF250-SXV, NF250-LXV, NF250-HXV NF250-SEV, NF250-HEV NF250-SGV, NF250-LGV, NF250-HGV NF125-SGV, NF125-LGV, NF125-HGV NF160-SGV, NF160-LGV, NF160-HGV NF250-SVU, NF250-HVU	NV125-SEV, NV125-HEV NV250-CV, NV250-SV, NV250-HV NV250-SVU, NV250-HVU	15	19	5	21	40	92	2	–	12	7	7	19
	NF30-CS	–	21	29	1	31	47	67	10	–	8.5	4.5	6	13
	NF225-CWU	–	12	18	2	21.5	38	92	7.5	–	13.5	7	8	18.5
	NF400-CW	NV400-CW	16.5	10	6.5	14.5	49	134	6.5	–	32.5	14.5	15.5	25
	NF400-SW/SEW/HEW/REW NF630-CW/SW/SEW/HEW/REW NF400-SWU/HWU	NV400-SW/SEW/HEW/REW NV630-CW/SW/SEW/HEW	16.5	10	6.5	14.5	49	155	6.5	–	32.5	13.5	15.5	46
	NF800-CEW/SDW/SEW/HEW/REW NF630-SWU/HWU	NV800-SEW/HEW	16.5	10	6.5	14.5	49	155	6.5	–	32.5	13.5	15.5	46
	NF1000-SEW, NF1250-SEW NF1600-SEW	–	18	12	6	17	84	190	–	4	41.5	13.5	15	36.5
R • U	NF125-RGV, NF250-RGV	–	15	19	5	21	40	92	2	–	12	7	7	19
	NF125-UV	–	15	19	5	21	40	92	–	29	12	7	7	17
	NF250-UV	–	15	19	5	21	40	92	–	35	12	7	7	19
	NF400-UEW	–	16.5	10	6.5	14.5	146	252	–	13.5	32.5	13.5	15.5	46
	NF400-UEW(4P), NF800-UEW	–	16.5	10	6.5	14.5	146	252	–	17	32.5	13.5	15.5	46
BH	BH	–	19	18	5	21	56	77.5	5	–	9.5	9.5	9.5	13
	BH-P	–	19	18	5	21	57.5	79	12	–	9.5	9.5	9.5	13

2. MCCB Trip Button, Instantaneous Adjustment Dial Drilling and Terminal Cover Mounting Hole Dimensions

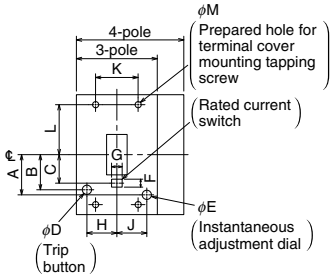

Fig. a

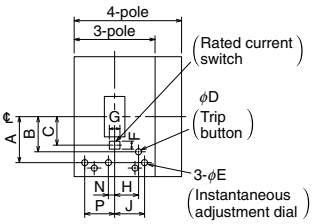

Fig. b

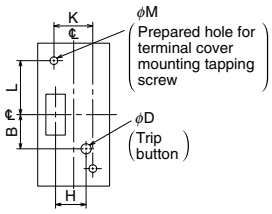

Fig. c

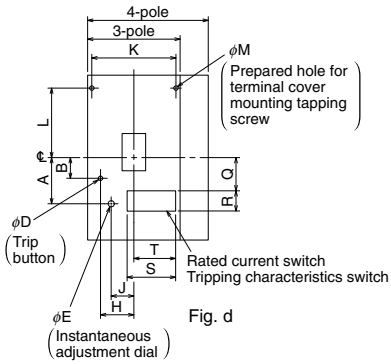

Fig. d

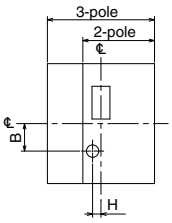

Fig. e

Table of dimension variations

(mm)

Model	Number of poles	Fig.	A	B	C	ϕD	ϕE	F	G	H	J	K	L	ϕM	N	P	Q	R	S	T
NF50-SVFU	2, 3	e	–	14	–	6.5	–	–	–	4	–	–	–	–	–	–	–	–	–	–
NF32-SV, NF63-CV	2	c	–	20	–	6.5	–	–	–	21	–	–	–	–	–	–	–	–	–	–
NF63-SV, NF63-HV	3, 4	a	–	20	–	6.5	–	–	–	29	–	–	–	–	–	–	–	–	–	–
NF125-CV, NF125-SV, NF125-HV, NF125-SXV	2	c	–	20	–	6.5	–	–	–	21	–	–	–	–	–	–	–	–	–	–
NF100-CVFU, NF125-SVU, NF125-HVU	3, 4	a	–	20	–	6.5	–	–	–	37	–	–	–	–	–	–	–	–	–	–
NF125-UV	2, 3, 4	a	–	20	–	6.5	–	–	–	37	–	–	–	–	–	–	–	–	–	–
NF125-LXV, NF125-HXV NF125-SEV, NF125-HEV, NF250-SV, NF250-HV NF125-SGV, NF125-LGV, NF125-HGV NF160-SGV, NF160-LGV, NF160-HGV NF250-SXV, NF250-LXV, NF250-HXV NF250-SGV, NF250-LGV, NF250-HGV NF250-SVU, NF250-HVU, NF250-UV	2, 3, 4	a	–	20	–	6.5	–	–	–	44	–	–	–	–	–	–	–	–	–	–
NF250-SEV, NF250-HEV	3, 4	a	–	20	–	6.5	–	–	–	44	–	–	–	–	–	–	–	–	–	–
NF125-RGV	2, 3	a	–	20	–	6.5	–	–	–	44	–	–	–	–	–	–	–	–	–	–
NF250-RGV	2, 3	a	–	20	–	6.5	–	–	–	44	–	–	–	–	–	–	–	–	–	–
NF30-CS	2	b	–	14.5	–	4	–	–	–	16	–	–	–	–	–	–	–	–	–	–
	3		–	14.5	–	4	–	–	–	27.5	–	–	–	–	–	–	–	–	–	–
NF225-CWU	2, 3	a	–	15.5	–	6.5	–	–	–	43	–	–	–	–	–	–	–	–	–	–
NF400-CW	2, 3	d	–	30.5	–	6.5	–	–	–	51.5	–	125	110.5	3.5	–	–	–	–	–	–
NF400-SW, NF400-SWU, NF400-HWU	2, 3	d	–	30.5	–	6.5	–	–	–	51.5	–	125	110.5	3.5	–	–	–	–	–	–
	4		–	30.5	–	6.5	–	–	–	51.5	–	125	110.5	3.5	–	–	–	–	–	–
NF400-SEW, NF400-HEW, NF400-REW	3	d	–	30.5	–	6.5	–	–	–	51.5	–	125	110.5	3.5	–	–	53	30	74	63.5
	4		–	30.5	–	6.5	–	–	–	51.5	–	125	110.5	3.5	–	–	53	30	74	63.5
NF400-UEW	3	d	–	50.5	–	6.5	–	–	–	51.5	–	125	130.5	3.5	–	–	53	30	74	63.5
	4		–	54	–	6.5	–	–	–	78.5	–	156	152	3.5	–	–	76.5	30	74	98.5
NF630-CW	2, 3	d	–	30.5	–	6.5	–	–	–	51.5	–	125	110.5	3.5	–	–	–	–	–	–
NF630-SW	2, 3	d	–	30.5	–	6.5	–	–	–	51.5	–	125	110.5	3.5	–	–	–	–	–	–
	4		–	30.5	–	6.5	–	–	–	51.5	–	125	110.5	3.5	–	–	–	–	–	–
NF630-SEW, NF630-HEW, NF630-REW	3	d	–	30.5	–	6.5	–	–	–	51.5	–	125	110.5	3.5	–	–	53	30	74	98.5
	4		–	30.5	–	6.5	–	–	–	51.5	–	125	110.5	3.5	–	–	53	30	74	98.5
NF800-CEW, NF800-SEW, NF800-HEW, NF800-REW	3	d	–	30.5	–	6.5	–	–	–	78.5	–	86	128.5	3.4	–	–	53	30	74	98.5
	4		–	30.5	–	6.5	–	–	–	78.5	–	156	128.5	3.4	–	–	53	30	74	98.5
NF800-SDW, NF630-SWU, NF630-HWU	2, 3	d	74	30.5	–	6.5	10	–	–	78.5	57	86	128.5	3.4	–	–	–	–	–	–
	4		74	30.5	–	6.5	10	–	–	78.5	57	156	128.5	3.4	–	–	–	–	–	–
NF800-UEW	3	d	–	54	–	6.5	–	–	–	78.5	–	86	152	3.4	–	–	76.5	30	74	98.5
	4		–	54	–	6.5	–	–	–	78.5	–	156	152	3.4	–	–	76.5	30	74	98.5
NF1000-SEW, NF1250-SEW	3	d	–	70	–	6	–	–	–	56.5	–	199	178.5	3.4	–	–	130	30	74	89
NF1600-SEW	4		–	70	–	6	–	–	–	56.5	–	269	178.5	3.4	–	–	130	30	74	89

Remarks:
1. The 4-pole part is available for the S and H Series 50A frame to 1600A frame (excluding NF400-REW, NF630-REW and NF800-REW).
2. The 2-pole part for NF250-CV and larger is the same as the 3-pole part. (Including NF125-HV.)
3. The terminal cover mounting hole shows the case for the screwed type. The breaker mounting hole is used to mount the one-touch terminal cover. Refer to the respective dimension drawings.
4. The K dimensions are divided down the breaker center.

3. ELCB Button and Switch Dimensions

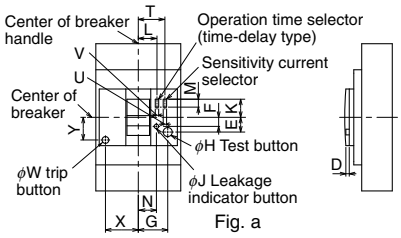

Fig. a

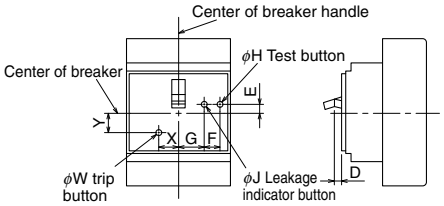

Fig. b

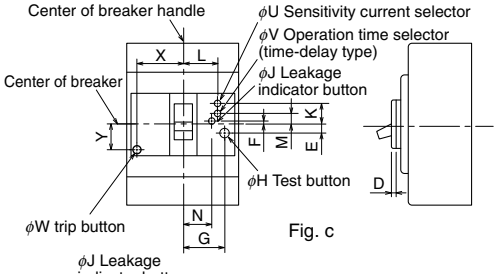

Fig. c

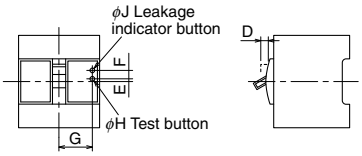

Fig. d

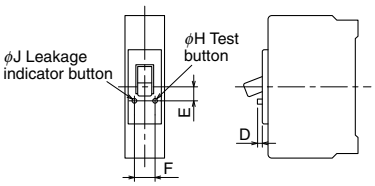

Fig. e

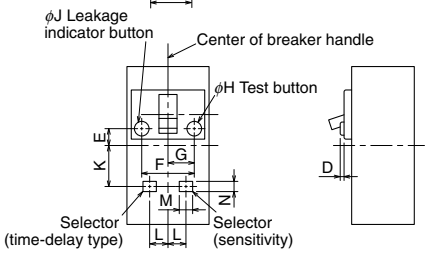

Fig. f

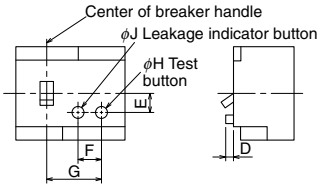

Fig. g

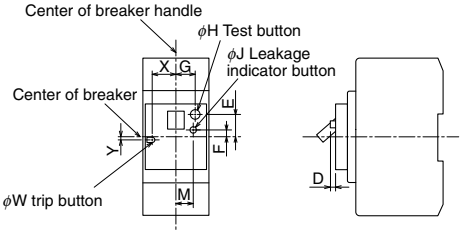

Fig. h

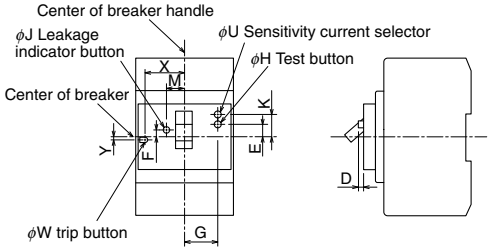

Fig. i

Table of dimension variations

Model		Reference drawing	Variable dimensions (mm)																
			D		E	F	G	H	J	K	L	M	N	T	U	V	W	X	Y
			Test button	Indicator button															
NV32-SV	Fixed type	a	3	4	13	8	26.5	9.5	4	–	–	–	16	–	–	–	6	29	20
NV63-CV, NV63-SV, NV63-HV	Selector type									16	–	7		23.5	3	–			
NV125-CV, NV125-SV, NV125-HV	Fixed type	a			13	8	26.5	9.5	4	–	–	–	16	–	–	–	6	37	20
	Selector type									16	–	7		24	3	–			
	Time-delay type									16	17	7		24	3	3			
NV250-CV, NV250-SV, NV250-HV	Fixed type	a			13	8	34	9.5	4	–	–	–	23.5	–	–	–	6	44	20
	Selector type									16	–	7		31	3	–			
	Time-delay type									16	24	7		31	3	3			
NV400-CW (note2)	Fixed type	c	3	3	(2.3)	14.6	43.5	9.5	5	–	43.5	–	43.5	–	–	–	6.5	51.5	30.5
NV400-SW	Selector type									30.6		–			5.5	–			
NV630-CW, NV630-SW	Time-delay type									30.6		22.6			5.5	5.5			
NV400-SEW, NV400-HEW	Fixed type	c	3	3	(2.3)	14.6	43.5	9.5	5	–	43.5	–	43.5	–	–	–	6.5	51.5	30.5
NV400-REW (note2)	Selector type									30.6		–			5.5	–			
NV630-SEW, NV630-HEW	Time-delay type									30.6		22.6			5.5	5.5			
NV800-SEW, NV800-HEW	Selector type	c	3	3	(2.3)	14.6	54.1	9.5	5	30.6	54.1	–	54.1	–	5.5	–	6.5	78.5	30.5
	Time-delay type									30.6		22.6			5.5	5.5			

Note *1 Dimensions shown in parentheses apply to minus direction.

4. List of Product Weights

MCCB

(kg)

Model	Item	Breaker body											Accessories (weight of only accessories)							
		Front connection type				Rear connection type				Plug-in type (including plug-in frame)			Electric operated type	Boxed type			Operation handle			Mechanical interlock (MI)
		1P	2P	3P	4P	1P	2P	3P	4P	2P	3P	4P		S	I	W	F type	V type	S type	
C•S•H•MB	NF32-SV	–	0.45	0.65	–	–	0.55	0.8	–	0.8	1.2	–	–	1.5	5.0	10.2	0.4	0.45	0.6	0.17
	NF63-CV (rated current 50A or less)	–	0.45	0.65	–	–	0.55	0.8	–	0.8	1.2	–	–	1.5	5.0	10.2	0.4	0.45	0.6	0.17
	NF63-CV (rated current 60A, 63A)	–	0.5	0.7	–	–	0.6	0.85	–	0.85	1.25	–	–	1.5	5.0	10.2	0.4	0.45	0.6	0.17
	NF63-SV, NF63-HV (rated current 50A or less)	–	0.5	0.7	0.9	–	0.6	0.85	1.1	0.85	1.25	1.5	–	1.5	5.0	10.2	0.4	0.45	0.6	0.17
	NF63-SV, NF63-HV (rated current 60A, 63A)	–	0.55	0.75	1.0	–	0.65	0.9	1.2	0.9	1.3	1.6	–	1.5	5.0	10.2	0.4	0.45	0.6	0.17
	NF125-CV	–	0.6	1.0	–	–	1.0	1.5	–	1.2	1.9	–	1.3	1.8	5.1	10.2	0.4	0.45	0.6	0.17
	NF125-SV	–	0.7	0.95	1.3	–	1.1	1.5	2.0	1.3	1.9	2.4	1.3	1.8	5.1	10.2	0.4	0.45	0.6	0.17
	NF125-HV	–	0.6	1.0	1.2	–	1.0	1.5	1.9	1.2	1.9	2.3	1.3	1.8	5.1	10.5	0.4	0.45	0.6	0.17
	NF125-SXV	–	0.6	1.0	1.2	–	1.0	1.5	1.9	1.2	1.9	2.3	1.3	1.8	5.1	10.5	0.4	0.45	0.6	0.17
	NF125-LXV	–	1.4	1.6	2.0	–	1.8	2.3	3.0	3.2	3.5	4.5	1.3	–	8.7	13.5	0.5	0.55	0.6	0.17
	NF125-HXV	–	1.4	1.6	2.0	–	1.8	2.3	3.0	3.2	3.5	4.5	1.3	–	8.7	13.5	0.5	0.55	0.6	0.17
	NF125-SEV	–	–	1.7	2.2	–	–	2.2	2.9	–	2.6	3.3	1.3	6.8	8.7	13.5	0.5	0.55	0.6	0.17
	NF125-HEV	–	–	1.7	2.2	–	–	2.2	2.9	–	2.6	3.3	1.3	6.8	8.7	13.5	0.5	0.55	0.6	0.17
	NF250-CV	–	1.3	1.5	–	–	1.7	2.2	–	3.1	3.4	–	1.3	6.8	8.7	13.5	0.5	0.55	0.6	0.17
	NF250-SV	–	1.4	1.6	2.0	–	1.8	2.3	3.0	3.2	3.5	4.5	1.3	6.8	8.7	13.5	0.5	0.55	0.6	0.17
	NF250-HV	–	1.4	1.6	2.0	–	1.8	2.3	3.0	3.2	3.5	4.5	1.3	–	8.7	13.5	0.5	0.55	0.6	0.17
	NF250-SXV	–	1.4	1.6	2.0	–	1.8	2.3	3.0	3.2	3.5	4.5	1.3	6.8	8.7	13.5	0.5	0.55	0.6	0.17
	NF250-LXV	–	1.4	1.6	2.0	–	1.8	2.3	3.0	3.2	3.5	4.5	1.3	–	8.7	13.5	0.5	0.55	0.6	0.17
	NF250-HXV	–	1.4	1.6	2.0	–	1.8	2.3	3.0	3.2	3.5	4.5	1.3	–	8.7	13.5	0.5	0.55	0.6	0.17
	NF250-SEV	–	–	1.7	2.2	–	–	2.4	3.2	–	3.6	4.7	1.3	6.8	8.7	13.5	0.5	0.55	0.6	0.17
	NF250-HEV	–	–	1.7	2.2	–	–	2.4	3.2	–	3.6	4.7	1.3	–	8.7	13.5	0.5	0.55	0.6	0.17
	NF125-SGV	–	1.4	1.6	2.0	–	1.8	2.3	3.0	3.2	3.5	4.5	1.3	6.8	8.7	13.5	0.5	0.55	0.6	0.17
	NF125-LGV	–	1.4	1.6	2.0	–	1.8	2.3	3.0	3.2	3.5	4.5	1.3	–	8.7	13.5	0.5	0.55	0.6	0.17
	NF125-HGV	–	1.4	1.6	2.0	–	1.8	2.3	3.0	3.2	3.5	4.5	1.3	–	8.7	13.5	0.5	0.55	0.6	0.17
	NF160-SGV	–	1.4	1.6	2.0	–	1.8	2.3	3.0	3.2	3.5	4.5	1.3	6.8	8.7	13.5	0.5	0.55	0.6	0.17
	NF160-LGV	–	1.4	1.6	2.0	–	1.8	2.3	3.0	3.2	3.5	4.5	1.3	–	8.7	13.5	0.5	0.55	0.6	0.17
	NF160-HGV	–	1.4	1.6	2.0	–	1.8	2.3	3.0	3.2	3.5	4.5	1.3	–	8.7	13.5	0.5	0.55	0.6	0.17
	NF250-SGV	–	1.4	1.6	2.0	–	1.8	2.3	3.0	3.2	3.5	4.5	1.3	6.8	8.7	13.5	0.5	0.55	0.6	0.17
	NF250-LGV	–	1.4	1.6	2.0	–	1.8	2.3	3.0	3.2	3.5	4.5	1.3	–	8.7	13.5	0.5	0.55	0.6	0.17
	NF250-HGV	–	1.4	1.6	2.0	–	1.8	2.3	3.0	3.2	3.5	4.5	1.3	–	8.7	13.5	0.5	0.55	0.6	0.17
	NF30-CS	–	0.25	0.35	–	–	0.35	0.5	–	–	–	–	–	1.1	–	–	–	–	–	–
	NF400-CW	–	4.4	5.0	–	–	5.7	7.0	–	7.0	8.3	–	9.0	–	19	30	2.0	–	1.9	0.45
	NF400-SW	–	4.6	5.2	6.8	–	5.9	7.3	9.7	7.2	8.5	11.3		–						
	NF400-SEW/HEW	–	–	6.0	7.6	–	–	8.1	10.5	–	9.3	12.0		–						
	NF400-REW	–	–	6.0	–	–	–	8.5	–	–	9.3	–		–	–	–				
	NF630-CW	–	5.2	6.0	–	–	6.5	7.9	–	7.6	9.1	–		–	33	30				
	NF630-SW	–	5.4	6.2	8.0	–	6.7	8.1	10.6	7.8	9.3	12.0		–						
	NF630-SEW/HEW	–	–	6.5	8.3	–	–	8.4	10.9	–	9.6	12.3		–						
	NF630-REW	–	–	6.5	–	–	–	8.4	–	–	9.6	–		–	–	–				
	NF800-CEW	–	–	10.9	–	–	–	12.1	–	–	16.3	–		–	48	70	2.4	–		
	NF800-SDW	–	9	–	–	–	10	–	–	–	–	–		–						
	NF800-SEW/HEW	–	–	10.9	14.2	–	–	12.1	15.8	–	16.3	21.4		–						
	NF800-REW	–	–	10.9	–	–	–	12.1	–	–	16.3	–		–	–	–				
	NF1000-SEW, NF1250-SEW	–	–	23.5	30.7	–	–	23	30.8	–	26.6	35.5	10	–	48	70	3.4	–	2.0	
	NF1600-SEW	–	–	34.5	41.2	–	–	30	40.7	–	–	–	10	–	–	–	3.4	–		0.55
R•U	NF125-RGV	–	1.5	1.8	–	–	–	–	–	2.35	2.7	–	1.3	–	–	–	0.5	0.55	0.6	0.17
	NF250-RGV	–	1.5	1.8	–	–	–	–	–	3.2	3.6	–	1.3	–	–	–	0.5	0.55	0.6	0.17
	NF125-UV	–	1.35	1.5	1.9	–	–	–	–	2.2	2.4	–	1.3	–	–	–	0.5	0.55	0.6	0.17
	NF250-UV	–	2.5	2.7	3.7	–	–	–	–	4.2	4.5	–	1.3	–	–	–	0.5	0.55	0.6	0.17
	NF400-UEW	–	–	16.2	25.4	–	–	18.6	30.7	–	19.8	–	9.0	–	–	–	2.2	–	1.9	0.45
	NF800-UEW	–	–	27.6	33.7	–	–	31.2	38.4	–	–	–		–	–	–	2.7	–		
BH	BH	0.15	0.31	0.47	–	–	–	–	–	–	–	–	–	–	–	–	–	–	–	–
	BH-P	0.13	0.26	0.38	–	–	–	–	–	–	–	–	–	–	–	–	–	–	–	–
UL	NF50-SVFU	–	0.3	0.45	–	–	–	–	–	–	–	–	–	–	–	–	0.3	0.35	–	–
	NF100-CVFU	–	0.6	0.85	–	–	–	–	–	–	–	–	–	–	–	–	0.4	0.45	–	–
	NF125-SVU	–	0.7	0.95	–	–	–	–	–	–	–	–	–	–	–	–	0.4	0.5	–	0.17
	NF125-HVU	–	–	1.0	–	–	–	–	–	–	–	–	–	–	–	–	0.4	0.5	–	0.17
	NF250-SVU	–	–	1.7	–	–	–	–	–	–	–	–	–	–	–	–	0.5	0.55	–	0.17
	NF250-HVU	–	–	1.7	–	–	–	–	–	–	–	–	–	–	–	–	0.5	0.55	–	0.17
	NF225-CWU	–	–	1.5	–	–	–	–	–	–	–	–	–	–	–	–	0.5	–	0.6	0.17
	NF400-SWU/HWU	–	–	5.7	–	–	–	–	–	–	–	–	–	–	–	–	2.0	–	1.9	0.45
	NF630-SWU/HWU	–	–	9.6	–	–	–	–	–	–	–	–	–	–	–	–	2.4	–	1.9	0.45

ELCB

(kg)

Model	Item	Breaker body									Accessories (weight of only accessories)							
		Front connection type			Rear connection type			Plug-in type (including plug-in frame)			Electric operated type	Boxed type			Operation handle			Mechanical interlock (MI)
		2P	3P	4P	2P	3P	4P	2P	3P	4P		S	I	W	F type	V type	S type	
C•S•H•U•UL	NV32-SV	–	0.75	–	–	0.95	–	–	1.35	–	–	1.5	5.0	10.2	0.4	0.45	0.6	0.17
	NV63-CV, NV63-SV (rated current 50A or less)	0.7	0.75	–	0.8	0.95	–	1.1	1.35	–	–	1.5	5.0	10.2	0.4	0.45	0.6	0.17
	NV63-CV, NV63-SV (rated current 60A, 63A)	0.75	0.8	–	0.85	1.0	–	1.15	1.4	–	–	1.5	5.0	10.2	0.4	0.45	0.6	0.17
	NV63-HV (rated current 50A or less)	–	0.75	–	–	0.95	–	–	1.35	–	–	1.5	5.0	10.2	0.4	0.45	0.6	0.17
	NV63-HV (rated current 60A, 63A)	–	0.8	–	–	1.0	–	–	1.4	–	–	1.5	5.0	10.2	0.4	0.45	0.6	0.17
	NV125-CV	–	1.0	–	–	1.5	–	–	1.9	–	1.3	1.8	5.1	10.2	0.4	0.45	0.6	0.17
	NV125-SV	–	1.1	1.4	–	1.6	2.1	–	2.0	2.5	1.3	1.8	5.1	10.2	0.4	0.45	0.6	0.17
	NV125-HV	–	1.1	1.4	–	1.6	2.1	–	2.0	2.5	1.3	1.8	5.1	10.5	0.4	0.45	0.6	0.17
	NV125-SEV	–	1.9	2.5	–	2.4	3.2	–	2.8	3.6	1.3	6.8	8.7	13.5	0.5	0.55	0.6	0.17
	NV125-HEV	–	1.9	2.5	–	2.4	3.2	–	2.8	3.6	1.3	6.8	8.7	13.5	0.5	0.55	0.6	0.17
	NV250-CV	–	1.7	–	–	2.4	–	–	3.6	–	1.3	6.8	8.7	13.5	0.5	0.55	0.6	0.17
	NV250-SV	–	1.9	2.5	–	2.6	3.5	–	3.8	5.0	1.3	6.8	8.7	13.5	0.5	0.55	0.6	0.17
	NV250-HV	–	1.8	–	–	2.5	–	–	3.7	–	1.3	–	8.7	13.5	0.5	0.55	0.6	0.17
	NV50-SVFU	0.4	0.5	–	–	–	–	–	–	–	–	–	–	–	0.3	0.35	–	–
	NV100-CVFU	–	0.95	–	–	–	–	–	–	–	–	–	–	–	0.4	0.45	–	–
	NV125-SVU	–	1.1	–	–	–	–	–	–	–	–	–	–	–	0.4	0.5	–	0.17
	NV125-HVU	–	1.1	–	–	–	–	–	–	–	–	–	–	–	0.4	0.5	–	0.17
	NV250-SVU	–	1.9	–	–	–	–	–	–	–	–	–	–	–	0.5	0.55	–	0.17
	NV250-HVU	–	1.9	–	–	–	–	–	–	–	–	–	–	–	0.5	0.55	–	0.17
	NV400-CW	–	5.6	–	–	7.7	–	–	8.9	–	9.0	–	19	30	2.0	–	1.9	0.45
	NV400-SW	–	5.9	–	–	8	–	–	9.2	–		–				–		
	NV400-SEW/HEW	–	6.6	8.2	–	8.7	11.4	–	9.9	12.5		–				–		
	NV400-REW	–	6.6	–	–	8.7	–	–	9.9	–		–	–	–	2.0	–		
	NV630-CW	–	6.9	–	–	8.8	–	–	10.0	–		–	33	30	2.4	–		
	NV630-SW	–	6.9	–	–	8.8	–	–	10.0	–		–						
	NV630-SEW	–	7.1	8.9	–	9.0	11.5	–	10.2	12.9						–		
	NV630-HEW	–	7.1	–	–	9.0	–	–	10.2	–		–				–		
	NV800-SEW/HEW	–	15.3	–	–	16.5	–	–	20.7	–	–	–	48	70		–		

5. Switching the Adjustable Items

(1) Adjustable rated current and tripping characteristics items

Applicable model	Adjustable item	Rated current	LTD tripping characteristics	STD tripping characteristics	Instantaneous tripping characteristics	PAL	Rated sensitivity	Rated Operating time (for time-delay type)	Rated voltage
MCCB	NF125-SEV/HEV	○	○ (*2)	○ (*2)	○	○ (*1)			
	NF250-SEV/HEV	○	○ (*2)	○ (*2)	○	○ (*1)			
	NF400-SEW/HEW/REW/UEW NF630-SEW/HEW/REW NF800-CEW/SEW/HEW/REW/UEW NF1000-SEW, NF1250-SEW, NF1600-SEW	○	○	○	○	○			
	NF800-SDW, NF630-SWU/HWU				○				
	NF125-SGV/LGV/HGV NF160-SGV/LGV/HGV NF250-SGV/LGV/HGV	○							
ELCB	NV125-SEV/HEV	○	○ (*2)	○ (*2)	○	○ (*1)	○	○	
	NV250-SEV/HEV	○	○ (*2)	○ (*2)	○	○ (*1)	○	○	
	NV400-SEW/HEW/REW NV630-SEW/HEW NV800-SEW/HEW	○	○	○	○	○	○	○	
	NV32-SV, NV63-CV/SV/HV						○		
	NV125-CV/SV/HV NV250-CV/SV/HV NV400-CW/SW, NV630-CW						○	○	

Notes *1 Available only for models with pre-alarm module.
*2 Use the OPERATION CHECK & SETUP UNIT Y-350. Consult Mitsubishi for details.

Remarks: Unless otherwise specified, the electronic breaker is adjusted to the following settings as a default.
(1) Rated current: maximum value
(2) LTD tripping characteristics:maximum value
(3) STD tripping characteristics (current, operating time):maximum value
(4) Instantaneous tripping characteristics:maximum value
(5) PAL:minimum value
(6) Rated sensitivity current:maximum value
(7) Leakage operation time (for time-delay type):maximum value

(2) Adjusting the rated current and tripping characteristics

Item	Electronic type	
Application	125 to 250A frame	400 to 1600A frame
Example of selector layout	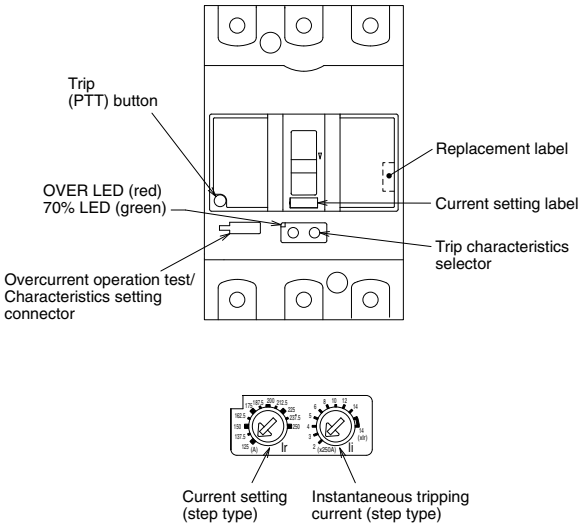	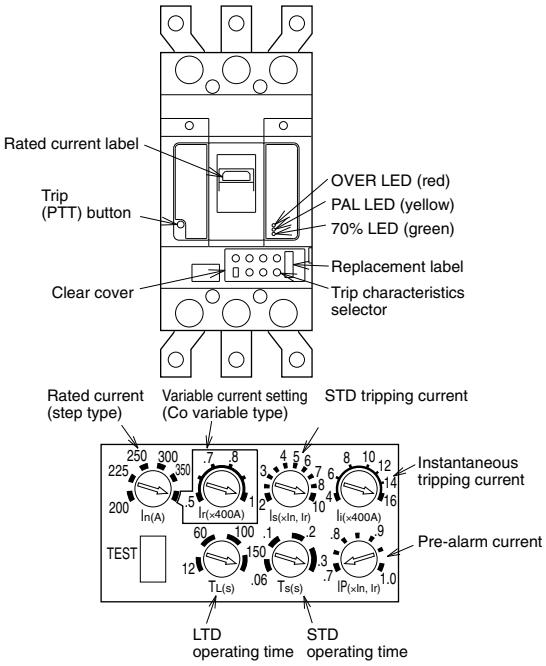
Example of making a selection	Turn the handle to OFF before starting the settings. ① Set the arrow of each characteristic's setting dial to the required scale position. Always set the dial arrow within the bold lines of the setting value. If stopped at the middle, the adjacent setting value may be applied. Use a 0.5mm thick flat-tip screwdriver with a 3mm or less tip width. Turn the screwdriver at 0.05N·m or less. ② From the replacement labels, select the rated current label with the same value as the setting value. ③ Replace the rated current label. ④ Close the cover and tighten the screw.	Turn the handle to OFF before starting the settings. ① Open the clear cover. ② Set the arrow of each characteristic's setting dial to the required scale position. For values other than instantaneous tripping current and adjustable current settings, which can be adjusted at any time, always set the dial arrow within the bold lines of the setting value. If stopped at the middle, the adjacent setting value may be applied. Use a 0.6mm thick flat-tip screwdriver with a 4.5mm or less tip width. Turn the screwdriver at 0.05N·m or less. ③ From the replacement labels, select the rated current label with the same value as the setting value. ④ Replace the rated current label. ⑤ Close the clear cover.
Setter and tester	**In case of 125 to 250A frame** **(Application: Electronic (effective value detection) breaker)** **The following items can be set and tested using the breaker test and setter Y-350.** ● **LTD and STD characteristics settings** ● **Long-term operation test (variable signal)** ● **Short-term operation test (fixed signal) *1** ● **Instantaneous operation test (fixed signal)** ● **Pre-alarm operation test (variable signal) *2** *1. Fixed signal which is 1.5 times the STD trip current. *2. Only for models with pre-alarm module.	**In case of 400 to 1600A frame** **(Application: Electronic (effective value detection) breaker)** **The following items can be tested using the tester Y-250.** ● **Long-term operation test (variable signal)** ● **Short-term operation test (fixed signal)** ● **Instantaneous operation test (fixed signal)** ● **Pre-alarm operation test (variable signal)** **Y-250**

(3) Selecting the rated voltage, rated sensitivity and operating time

Model		Selector layout	Voltage selection	Sensitivity and operation time selection
ELCB	3-step sensitivity selector type	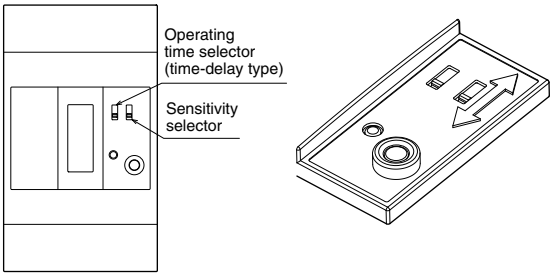	Use for the circuit voltage within the rated voltage.	Turn the handle to OFF before changing the selection.
		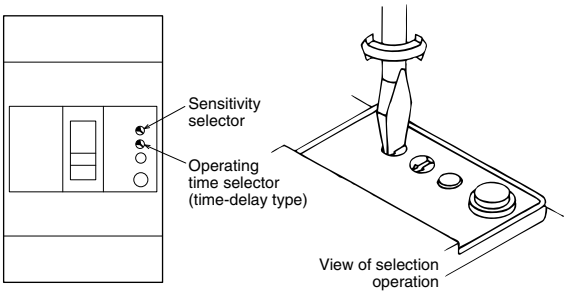	Use for the circuit voltage within the rated voltage.	Turn the handle to OFF before changing the selection.

6. Breaker Mounting Screw Dimensions

■ MCCB • MCB

Class	Model	Hole depth A	Wood screw (round wood screw) for front connection	Front connection type	Rear connection type	Plug-in type	Required quantity per unit			
							1P	2P	3P	4P
C • S • H	NF50-SVFU	56	–	M4×0.7×65 (note)	–	–	–	2	2	–
	NF32-SV, NF63-CV, NF63-SV, NF63-HV NF125-CV, NF125-SV, NF125-HV, NF125-SXV NF100-CVFU, NF125-SVU NF125-HVU	45	4.1×58	M4×0.7×55	M4×0.7×55	M4×0.7×55	–	2	2	4
	NF125-SEV, NF125-HEV, NF125-LXV, NF125-HXV NF250-CV, NF250-SV, NF250-HV NF250-SXV, NF250-LXV, NF250-HXV NF250-SEV, NF250-HEV NF250-SVU, NF250-HVU NF125-SGV, NF125-LGV, NF125-HGV NF160-SGV, NF160-LGV, NF160-HGV NF250-SGV, NF250-LGV, NF250-HGV	45	4.1×58	M4×0.7×55	M4×0.7×55	M4×0.7×55 M4×0.7×73	–	2 (For plug-in type 4)	2	4
	NF30-CS	10	4.1×25	M4×0.7×20	M4×0.7×20	–	–	2	2	–
	NF225-CWU	45	4.1×58	M4×0.7×55	–	–	–	2 (For plug-in type 4)	2	4
	NF400-CW, NF400-SW NF400-SWU, NF400-HWU	47	–	M6×60	M6×72	M6×72	–	4	4	4
	NF400-SEW, NF400-HEW, NF400-REW NF630-CW, NF630-SW, NF630-SEW NF630-HEW, NF630-REW	59	–	M6×72	M6×85	M6×85	–	4	4	4
	NF800-CEW, NF800-SEW NF800-HEW, NF800-REW NF630-SWU, NF630-HWU	15	–	M6×35	M6×40	M6×35	–	4	4	4
	NF1000-SEW, NF1250-SEW	18.5	–	M8×40	M8×40	M8×40	–	4	4	4
	NF1600-SEW	18.5	–	M8×40	M8×40	–	–	4	4	4
R • U	NF125-RGV NF250-RGV	45	–	M4×0.7×55	M4×0.7×55	M4×0.7×55	–	2	2	–
	NF125-UV, NF250-UV	45/61	–	M4×0.7×55/73	M4×0.7×55/73	M4×0.7×55/73	–	4	4	–
	NF125-UV (4P), NF250-UV (4P)	45	–	M4×0.7×55	M4×0.7×55	M4×0.7×55	–	2	2	4
	NF400-UEW (3P)	47/156	–	M6×65/174	M6×72/181	M6×72/181	–	–	4	–
	NF400-UEW (4P), NF800-UEW	15/112	–	M6×35/132	M6×40/137	M6×35/132	–	–	4	6
BH	BH	–	–	–	–	–	–	–	–	–
	BH-P	–	–	–	–	–	–	–	–	–

Remarks: 1. The mounting shown in the ▭ sections are enclosed with the MCCB. The mounting screws for the plug-in connection are enclosed with the plug-in terminal block. All other mounting screws must be prepared by the user.
2. All mounting screws other than the hexagon socket bolts and hexagon bolts are P-type panhead screws.
3. For models with two types of mounting screws, the screw length differs on the supply side and load side.
4. The plug-in type is not available for NF800-UEW.

Note For the P-type panhead screw, use a type with a spring washer and flat washer (small round) combination, or a P-type panhead screw with spring washer and flat washer.

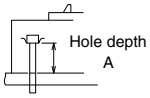

■ ELCB

Class	Model	Hole depth A	Wood screw (round wood screw) for front connection	Screw for steel plates (P-type panhead screw)			Required quantity per unit	
				Front connection type	Rear connection type	Plug-in type	2, 3P	4P
NV	NV50-SVFU	56	–	M4×0.7×65 (note)	–	–	2	–
	NV32-SV, NV63-CV, NV63-SV, NV63-HV NV125-CV, NV125-SV, NV125-HV NV100-CVFU, NV125-SVU, NV125-HVU	45	4.1×58	M4×0.7×55	M4×0.7×55	M4×0.7×55	2	4
	NV125-SEV, NV125-HEV NV250-CV, NV250-SV, NV250-HV NV250-SEV, NV250-HEV, NV250-SVU, NV250-HVU	45	4.1×58	M4×0.7×55	M4×0.7×55	M4×0.7×55 M4×0.7×73	2 (For plug-in type 4)	4
	NV400-CW, NV400-SW	47	–	M6×60	M6×72	M6×72	4	4
	NV400-SEW, NV400-HEW, NV400-REW NV630-CW, NV630-SW, NV630-SEW NV630-HEW	59	–	M6×72	M6×85	M6×85	4	4
	NV800-SEW, NV800-HEW	15	–	M6×35	M6×40	M6×35	4	4

Remarks: 1. The mounting shown in the ▭ sections are enclosed with the ELCB.

Note For the P-type panhead screw, use a type with a spring washer and flat washer (small round) combination, or a P-type panhead screw with spring washer and flat washer.

7. List of Mold Surface Temperature-rise Values

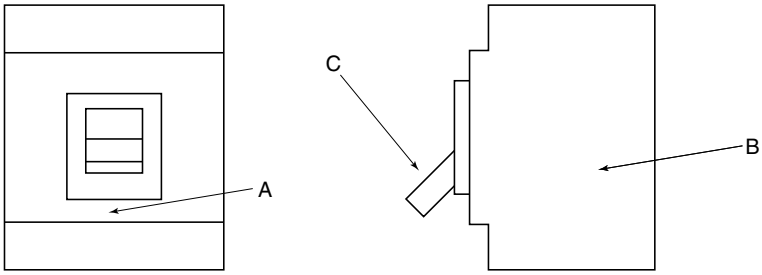

MCCB

(K)

Model	Conducting current	Measurement point				
		Cover surface (A)	Base side (B)	Handle (C)	Line terminal	Load terminal
NF32-SV	32A	14	38	12	36	37
NF63-CV	63A	15	42	14	39	44
NF63-SV	63A	15	39	12	41	44
NF63-HV	63A	15	42	12	41	49
NF125-CV	125A	13	29	9	43	42
NF125-SV	125A	14	32	10	44	40
NF125-HV	125A	16	33	11	49	42
NF125-SXV	125A	16	33	11	49	42
NF125-LXV/HXV	125A	19	35	12	43	45
NF250-SXV/LXV/HXV	250A	20	36	13	49	46
NF250-CV	250A	19	35	13	46	45
NF250-SV	250A	20	36	13	47	45
NF250-HV	250A	20	36	13	49	46
NF30-CS	30A	18	15	5	23	33
NF125-SGV	125A	20	35	13	42	49
NF160-SGV	160A	20	35	13	40	44
NF250-SGV	250A	20	36	13	49	50

(K)

Model	Conducting current	Measurement point				
		Cover surface (A)	Base side (B)	Handle (C)	Line terminal	Load terminal
NF400-CW	400A	16	25	16	47	37
NF400-SW	400A	20	27	10	46	37
NF400-SEW	400A	14	22	9	35	31
NF400-HEW	400A	14	23	8	34	32
NF400-REW	400A	15	23	9	35	32
NF400-UEW	400A	19	28	13	42	33
NF630-CW	630A	23	32	15	52	52
NF630-SW	630A	23	33	16	54	52
NF630-SEW	630A	22	31	14	51	45
NF630-HEW	630A	20	31	13	50	44
NF630-REW	630A	21	31	13	51	44
NF800-CEW	800A	21	30	13	45	40
NF800-SDW	800A	18	28	12	46	44
NF800-SEW	800A	21	30	12	45	41
NF800-HEW	800A	22	31	12	47	42
NF800-REW	800A	21	30	13	46	42
NF800-UEW	800A	25	35	16	51	46

ELCB

(K)

Model	Conducting current	Measurement point				
		Cover surface (A)	Base side (B)	Handle (C)	Line terminal	Load terminal
NV32-SV	32A	15	35	11	36	41
NV63-CV	63A	17	32	13	43	41
NV63-SV	63A	17	37	13	45	47
NV63-HV	63A	17	35	13	43	43
NV125-CV	125A	13	30	13	47	43
NV125-SV	125A	14	30	15	45	43
NV125-HV	125A	14	32	14	42	43
NV250-CV	250A	21	37	14	43	44
NV250-SV	250A	21	39	18	47	43
NV250-HV	250A	23	38	17	48	43

(K)

Model	Conducting current	Measurement point				
		Cover surface (A)	Base side (B)	Handle (C)	Line terminal	Load terminal
NV400-CW	400A	22	32	11	46	41
NV400-SW	400A	23	32	12	47	42
NV400-SEW	400A	16	23	10	36	34
NV400-HEW	400A	15	22	11	35	35
NV400-REW	400A	15	22	10	36	35
NV630-CW	630A	24	34	17	54	52
NV630-SW	630A	23	33	16	53	53
NV630-SEW	630A	23	34	17	54	53
NV630-HEW	630A	22	33	17	54	52
NV800-SEW	800A	29	40	13	53	46

Notes *1 The connected wire size follows JIS C 8201 Ann.2 Standards. The temperature rise value will vary according to the size of the connected wire.
*2 This table shows the temperature-rise values. The ambient temperature must be added for the actual measurement value.
*3 These are examples of the measurement values, and are not guaranteed values. Use these as reference data.

8. Ordering Information

Molded Case Circuit Breakers

Model
NF250-SV

NF	C	Economy class
	S	Standard class
	H	High-performance class
	U	Ultra current-limiting class
DSN		DSN-type switches

Number of poles
3P

2P, 3P, 4P

Rated current
200A

Please specify the rated current even for rated current adjustable types

Motor protection
MB

Please specify MB for Motor Protection Breakers

Rated voltage

Please specify DC voltage for use in DC circuit

Standard

Please specify applicable marine standard

Connection method
B

F	Front connection
SL	Solderless (box) terminal
B	Rear connection
PM	Plug-in

Built-in accessories
PAL

PAL	Pre-alarm (contact output)

Internal accessories
AL, SHT (110VAC)

AL	Alarm switch
AX	Auxiliary switch
SHT	Shunt trip (specify rated coil voltage)
UVT	Undervoltage trip (specify rated coil voltage)
SLT	Lead-wire terminal block

External accessories

MD	Electrical operation device
F/S/V	Operating handle
S/I/W	Enclosure box
MI	Mechanical interlock
TC	Terminal cover (TC-L, TC-S, TTC, BTC)
LC/HL HL-S	Handle lock device
CH	Card holder

Special-purpose breakers

Mag Only	Mag Only (specify AC or DC and rated current)
DC400V	DC use (specify 400, 440, 500, 550 or 600VDC)
400Hz	400Hz use
Low-inst	Low-inst (specify AC or DC and Inst. %)

Quantity
10

Earth Leakage Circuit Breakers

Model
NV250-SV

NV	C	Economy class
	S	Standard class
	H	High-performance class
	U	Ultra current-limiting class

Number of poles
3P

2P	NV	1ø2W
3P	NV	1ø2W 1ø3W 3ø3W
4P	NV	3ø4W

Rated current
200A

Please specify the rated current even for rated current adjustable types

Motor protection
MB

Please specify MB for Motor Protection Breakers

Rated voltage
AC

AC
100-440V
200-440V

Rated sensitivity current
100/200/500mA

30mA
100/200/500mA

Connection method
B

F	Front connection
SL	Solderless (box) terminal
B	Rear connection
PM	Plug-in

Type of residual current protection

Blank	High-speed type
Specify	Time-delay type

Built-in accessories
MG

MG	Insulation switch
EAL	Earth-leakage circuit alarm switch
TBM	Test button module
PAL	Pre-alarm module

Internal accessories
AX, SLT, TBM

AL	Alarm switch
AX	Auxiliary switch
UVT	Undervoltage trip (specify rated coil voltage)
SLT	Lead-wire terminal block

External accessories

MD	Electrical operation device
F/S/V	Operating handle
MI	Mechanical interlock
TC	Terminal cover (TC-L, TC-S, TTC, BTC)
LC/HL HL-S	Handle lock device
CH	Card holder

Quantity
10

Circuit Protector (CP30-BA)

Model	Number of poles	Internal circuit	Operating characteristics	Rated current or rated operational voltage	Connection method
CP30-BA	1P	1	M	3A	

Number of poles

1P
2P
3P (Note 1)

Internal circuit

1	Inline type
2	Inline type with auxiliary switch (general load)
21*	Inline type with auxiliary switch (microload) (Note 2)
6	Relay type shunt tripping
9	Inline type with alarm switch (general load)
91*	Inline type with auxiliary switch (microload) (Note 2)

Operating characteristics

I	Instantaneous type
M	Medium-speed type
MD	Medium-speed type with inertial delay (Note 1)
S	Low-speed type
SD	Low-speed type with inertial delay (Note 1)
F	High-speed type

Rated operational voltage (for shunt tripping)

100-200V	100-200VAC and 100VDC common
24-48V	24-48VDC common

Rated current or rated operational voltage

0.1A	0.25A	0.3A	0.5A
1A	2A	3A	5A
7A	10A	15A	20A
30A			

Shaded parts are standard inventory.

Connection method

No symbol	Screw terminal
T	Metal tab terminal

Notes *1 3-pole and inertial delay models are dedicated for AC.
2 If an auxiliary switch (AX) or alarm switch (AL) used for a 125VAC 0.5A or less circuit is required, select the microload type indicated with an asterisk.
*3 The relay type shunt trip is subject to CCC. This is a UL (cURus) and CE Marking compliant product.

Example 1. CP30-BA 1P 1-M 3A (example of inline type, medium-speed, 1-pole part, 3A, screw terminal specifications)

As a standard, this product is a UL (cURus), CCC, CE Marking compliant product.

Mandatory items are indicated with a bold box. Always specify these items.

Unless specified, all other items will be manufactured with standard Mitsubishi specifications.

UL 489 Listed Molded Case Circuit Breakers

Model	Number of poles	Rated current	Connection method	Internal accessories	Number of units	External accessories
NF250-SVU	3P	200A	F	AL, SHT(AC100-240V)	10 units	

Number of poles

2P
3P

Connection method

F	Crimp terminal
SL	Solderless terminal
BAR	Bar terminal

Internal accessories

AL	Alarm switch
AX	Auxiliary switch
SHT	Shunt tripping device (Designate rated voltage for coil)
UVT	Undervoltage tripping device (Designate rated voltage for coil)
SLT	Vertical lead-wire terminal block

* When ordering two, designate as AL2 or AX2. For the microload type, designate AL-B or AX-B.

External accessories

F•V•S•C	Operation handle
MI	Mechanical interlock
TC	Terminal cover (TC-L(*), TC-S)
HL•HL-S	Handle lock

* For the 30 to 250A frame 2-pole or 3-pole TC-L, the specifications will be set according to the rated current.

UL 489 Listed Earth Leakage Circuit Breakers

Model	Number of poles	Rated current	Rated voltage	Rated sensitivity current	Connection method	Internal accessories	Number of units	External accessories
NV250-SVU	3P	200A	AC120-480V	100•300•500mA	F	AX, SLT	10 units	

Number of poles

2P
3P

Rated voltage

AC240V
AC120-240V
AC120-480V

Rated sensitivity current

30
50
100
100 • 200 • 500mA
100 • 300 • 500mA

Connection method

F	Crimp terminal
SL	Solderless terminal
BAR	Bar terminal

Internal accessories

AL	Alarm switch
AX	Auxiliary switch
SHT	Shunt tripping device (Designate rated voltage for coil)
UVT	Undervoltage tripping device (Designate rated voltage for coil)
SLT	Vertical lead-wire terminal block

* When ordering two, designate as AL2 or AX2. For the microload type, designate AL-B or AX-B.

External accessories

F•V•S•C	Operation handle
MI	Mechanical interlock
TC	Terminal cover (TC-L (*), TC-S)
HL•HL-S	Handle lock

* For the 30 to 250A frame 2-pole or 3-pole TC-L, the specifications will be set according to the rated current.

9. Melshort 2

A Smarter, Easier Way to Select Breakers

This software program ensures the easy selection of low-voltage circuit breakers according to the required rated breaking capacity and related equipment.

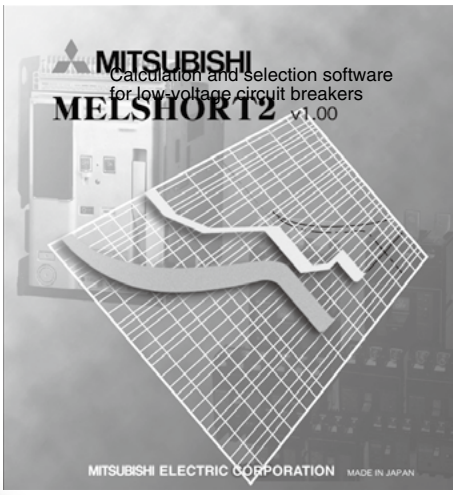

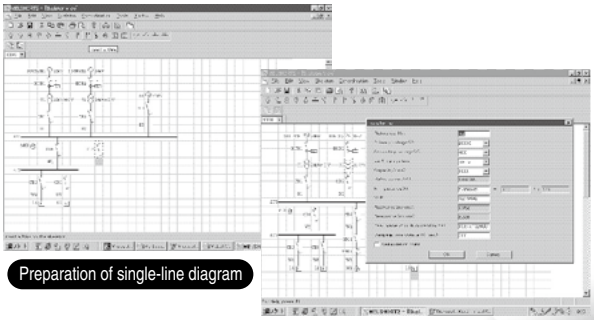

Preparation of single-line diagram

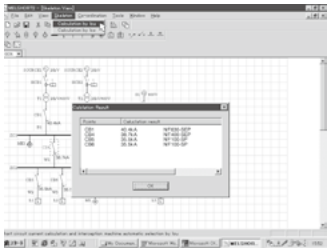

Short-circuit current calculation

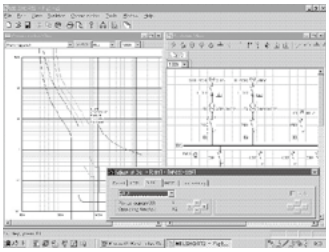

Coodination between high-voltage protection equipments

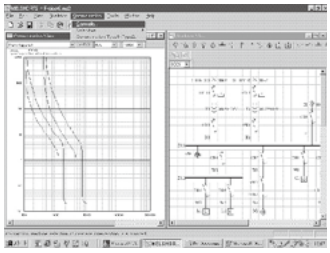

Examination of cascade interruption combination

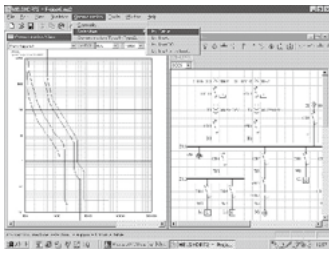

Examination of selective interraption

Advantages

●Contents

The program's menu allows not only short-circuit current calculations, but also the examination of various protection coordination.

- ●Preparation of single-line connection diagrams.
- ●Short-circuit calculations.
- ●Automatic selection of breaker type.
- ●Selection of breaker type for cascade interruption combination.
- ●Selection of breaker type for selective interruption combination.
- ●Examination of coordination between high-voltage protection equipment.
- ●Protection coordination with motor start current.

■Products Menu

Low-voltage circuit breakers:
MCCBs, ELCBs, ACBs, MCBs, Contactors,
Thermal relays, High-voltage OCRs

●Selection Efficiency Improved

Simple, accurate and fast operation is ensured as a result of being able to examine the coordination between various protection systems, and being able to select breakers interactively on the screen.

●Software Updates

Users can download the latest software updates by accessing Mitsubishi's LVS home page.

http://www.fukuyama.melco.co.jp/lvs

■Computer Requirements

Operating system: Windows 95/98/NT4.0/2000/XP
CPU: 166 MHz or faster
RAM memory size: min 32 MB
Free hard disk capacity: min 50 MB
Display resolution: min 640 x 480 dots
CD-ROM Drive: 2x or higher

Low Voltage Circuit Breakers

Sales Network

Country / Region	Corporation Name	Address	Telephone
Australia	Mitsubishi Electric Australia Pty. Ltd.	348 Victoria Road, Rydalmere, N.S.W. 2116, Australia	+61-2-9684-7777
Bangladesh	PROGRESSIVE TRADING CORPORATION	Haque Tower, 2nd floor, 610/11,Jubilee Road, Chittagong, Bangladesh	+880-31-624-307
	ELECTRO MECH AUTOMATION& ENGINEERING LTD.	Purana Paltan Lane, (VIP Road), Rokeya Mansion(6th floor), Room#702,Dhaka-1000, Bangladesh	+880-28-321-791
Belarus	Tehnikon	Oktyabrskaya 19, Off. 705, BY-220030 Minsk, Belarus	+375(0)17/210 46 26
Belgium	Koning & Hartman B.V.	Woluwelaan 31, BE-1800 Vilvoorde, Belgium	+32(0)2/2570240
Cambodia	DHINIMEX CO.,LTD	#245, St. Tep Phan, Phnom Penh, Cambodia	+855-23-997-725
Chile	Rhona S.A.	Vte. Agua Santa 4211 Casilla 30-D (P.O. Box) Vina del Mar, Chile	+56-32-2-320-600
China	Mitsubishi Electric Automation (China) Ltd.	Mitsubishi Electric Automation Building, No.1386 Hongqiao Road, Shanghai, 200336	+86-21-2322-3030
	Mitsubishi Electric Automation (China) Ltd. BeiJing Branch	5/F,ONE INDIGO,20 Jiuxianqiao Road Chaoyang District,Beijing, China	+86-10-6518-8830
	Mitsubishi Electric Automation (China) Ltd. ShenZhen Branch	Room 2512--2516, Great China International Exchange Square, Jintian Rd.S., Futian District, Shenzhen, 518034	+86-755-2399-8272
	Mitsubishi Electric Automation (China) Ltd. GuangZhou Branch	Room 1609, North Tower, The Hub Center, No.1068, Xing Gang East Road, Haizhu District, Guang Zhou, China 510335	+86-20-8923-6730
	Mitsubishi Electric Automation (China) Ltd. ChengDu Branch	Block B, Room 407-408, Shangri-La Center Offeice Builiding, No.9 BinJiang East Road, Chengdu, China 610021	+86-28-8446-8030
	Mitsubishi Electric Automation (Hong Kong) Ltd.	20/F., Cityplaza One, 111 king's Road, Taikoo shing, Hong Kong	+852-2510-0555
Colombia	Proelectrico Representaciones S.A.	Carrera 42 # 75-367 Bod 109 Itagui Colombia	+57-4-4441284
Czech Republic	AUTOCONT CONTROL SYSTEMS S.R.O	Technologická 374/6, CZ-708 00 Ostrava - Pustkovec	+420 595 691 150
Denmark	BEIJER ELECTRONICS A/S	LYKKEGARDSVEJ 17, DK-4000 ROSKILDE	+45(0)46/75 76 66
Egypt	Cairo Electrical Group	9, Rostoum St. Garden City P.O. Box 165-11516 Maglis El-Shaab, Cairo - Egypt	+20-2-27961337
France	Mitsubishi Electric Europe B.V.	25, Boulevard des Bouvets, F-92741 Nanterre Cedex	+33(0)1/55 68 55 68
Germany	Mitsubishi Electric Europe B.V.	Mitsubishi-Electric-Platz 1, 40882 Ratingen, Germany	+49(0) 2102 486-0
Greece	KALAMARAKIS - SAPOUNAS S.A.	IONIAS & NEROMILOU STR., CHAMOMILOS ACHARNES, ATHENS, 13678 Greece	+30-2102 406000
	UTECO	5, MAVROGENOUS STR., 18542 PIRAEUS, Greece	+30-211-1206-900
Hungary	Meltrade Ltd.	Fertö utca 14. HU-1107 Budapest, Hungary	+36(0)1-431-9726
India	Mitsubishi Electric India Private Limited	2nd Floor, Tower A&B, Cyber Greens, DLF Cyber City, DLF Phase-III, Gurgaon - 122 022 Haryana, India	+91-124-4630300
Indonesia	P. T. Sahabat Indonesia	P.O.Box 5045 Kawasan Industri Pergudangan, Jakarta, Indonesia	+62-(0)21-6610651-9
Ireland	Mitsubishi Electric Europe B.V.	Westgate Business Park, Ballymount, IRL-Dublin 24, Ireland	+353(0)1-4198800
Israel	Gino Industries Ltd.	26, Ophir Street IL-32235 Haifa, Israel	+972(0)4-867-0656
Italy	Mitsubishi Electric Europe B.V.	Viale Colleoni 7, I-20041 Agrate Brianza (MI), Italy	+39 039-60531
Kazakhstan	Kazpromavtomatika	Ul. Zhambyla 28, KAZ - 100017 Karaganda	+7-7212-501000
Korea	Mitsubishi Electric Automation Korea Co., Ltd	9F Gangseo Hangang xi-tower, 401 Yangcheon-ro, Gangseo-gu, Seoul 07528 Korea	+82-2-3660-9572
Laos	AROUNKIT CORPORATION IMPORT- EXPORT SOLE CO.,LTD	SAPHANMO VILLAGE. SAYSETHA DISTRICT, VIENTIANE CAPITAL, LAOS	+856-20-415899
Lebanon	Comptoir d'Electricite Generale-Liban	Cebaco Center - Block A Autostrade Dora, P.O. Box 11-2597 Beirut - Lebanon	+961-1-240445
Lithuania	Rifas UAB	Tinklu 29A, LT-5300 Panevezys, Lithuania	+370(0)45-582-728
Malaysia	Mittric Sdn Bhd	No. 5 Jalan Pemberita U1/49, Temasya Industrial Park, Glenmarie 40150 Shah Alam, Selangor, Malaysia	+603-5569-3748
	Flexible Automation System Sdn Bhd	60 Jalan USJ/10/1B, 47620 UEP Subang Jaya, Selangor Darul Ehsan, Malaysia	+603-5633 1280
Malta	ALFATRADE LTD	99 PAOLA HILL, PAOLA PLA 1702, Malta	+356(0)21-697-816
Maroco	SCHIELE MAROC	KM 7,2 NOUVELLE ROUTE DE RABAT AIN SEBAA, 20600 Casablanca, Maroco	+212 661 45 15 96
Myanmar	Peace Myanmar Electric Co.,Ltd.	NO137/139 Botahtaung Pagoda Road, Botahtaung Town Ship 11161, Yangon, Myanmar	+95-(0)1-202589
Nepal	Watt&Volt House	KHA 2-65, Volt House Dillibazar Post Box: 2108, Kathmandu, Nepal	+977-1-4411330
Netherlands	Imtech Marine & Offshore B.V.	Sluisjesdijk 155, NL-3087 AG Rotterdam, Netherlands	+31(0)10-487-19 11
North America	Mitsubishi Electric Automation, Inc.	500 Corporate Woods Parkway, Vernon Hills, IL 60061 USA	+847-478-2100
Norway	Scanelec AS	Leirvikasen 43B, NO-5179 Godvik, Norway	+47(0)55-506000
Middle East Arab Countries & Cyprus	Comptoir d'Electricite Generale-International-S.A.L.	Cebaco Center - Block A Autostrade Dora P.O. Box 11-1314 Beirut - Lebanon	+961-1-240430
Pakistan	Prince Electric Co.	2-P, GULBERG II, LAHORE - 54660 PAKISTAN	+92-(0)42-35752323 +92-(0)42-35753373
	AL-KAMAL GROUP	Office No. 7 & 8, 1st Floor, Barkat Ali Khan Center, 101 Circular Road, Lahore. Pakistan	+92-(0)42-37631632
Philippines	Edison Electric Integrated, Inc.	24th Fl. Galleria Corporate Center, Edsa Cr. Ortigas Ave., Quezon City Metro Manila, Philippines	+63-(0)2-634-8691
Poland	Mitsubishi Electric Europe B.V. Polish Branch	Krakowska 50, 32-083 Balice, Poland	+48(0)12 630 47 00
Republic of Moldova	Intehsis SRL	bld. Traian 23/1, MD-2060 Kishinev, Moldova	+373(0)22-66-4242
Romania	Sirius Trading & Services SRL	RO-060841 Bucuresti, Sector 6 Aleea Lacul Morii Nr. 3	+40-(0)21-430-40-06
Russia	Mitsubishi Electric Europe B.V. Moscow Branch	52, bld. 3 Kosmodamianskaya Nab. 115054, Moscow, Russia	+7 495 721-2070
Saudi Arabia	Center of Electrical Goods	Al-Shuwayer St. Side way of Salahuddin Al-Ayoubi St. P.O. Box 15955 Riyadh 11454 - Saudi Arabia	+966-1-4770149
Singapore	Mitsubishi Electric Asia Pte. Ltd.	307 Alexandra Road, Mitsubishi Electric Building, Singapore 159943	+65-6473-2308
Slovakia	PROCONT, Presov	Kupelna 1/, SK - 08001 Presov, Slovakia	+421(0)51-7580 611
	SIMAP	Jana Derku 1671, SK - 91101 Trencin, Slovakia	+ 421(0)32 743 04 72
Slovenia	Inea RBT d.o.o.	Stegne 11, SI-1000 Ljubljana, Slovenia	+386(0)1-513-8116
South Africa	CBI-electric: low voltage	Private Bag 2016, ZA-1600 Isando Gauteng, South Africa	+27-(0)11-9282000
Spain	Mitsubishi Electric Europe B.V. Spanish Branch	Carretera de Rubí 76-80, E-08190 Sant Cugat del Vallés (Barcelona), Spain	+34(0)93-565-3131
Sweden	Euro Energy Components AB	Järnvägsgatan 36, S-434 24 Kungsbacka, Sweden	+46(0)300-690040
Switzerland	TriElec AG	Muehlentalstrasse 136, CH-8201 Schaffhausen	+41-(0)52-6258425
Taiwan	Setsuyo Enterprise Co., Ltd	5th Fl., No.105, Wu Kung 3rd, Wu-Ku Hsiang, Taipei, Taiwan, R.O.C.	+886-(0)2-2298-8889
Thailand	United Trading & Import Co., Ltd.	77/12 Bamrungmuang Road, Klong Mahanak Pomprab Bangkok Thailand	+66-223-4220-3
Tunisia	MOTRA Electric	3, Résidence Imen, Avenue des Martyrs Mourouj III, 2074 - El Mourouj III Ben Arous, Tunisia	+216-71 474 599
Turkey	GTS	Bayraktar Bulvarı Nutuk Sok. No:5, Posta Kutusu34384, TR-34775 Yukan Dudullu-Uemraniye, Istanbul, Turkey	+90(0)216 526 3990
United Kingdom	Mitsubishi Electric Europe B.V.	Travellers Lane, UK-Hatfield, Herts. AL10 8XB, United Kingdom	+44(0)1707-276100
Uruguay	Fierro Vignoli S.A.	Avda. Uruguay 1274 Montevideo Uruguay	+598-2-902-0808
Venezuela	Adesco S.A.	Calle 7 La Urbina Edificio Los Robles Locales C y D Planta Baja, Caracas - Venezuela	+58-212-241-9952
Vietnam	Mitsubishi Electric Vietnam Co., Ltd. Head Office	Unit01-04, 10th Floor, Vincom Center, 72 Le Thanh Ton Street, District 1, Ho Chi Minh City, Vietnam	+84-28-3910-5945
	Mitsubishi Electric Vietnam Co., Ltd. Hanoi Branch	24th Floor, Handico Tower, Pham Hung Road, khu do thi moi Me Tri Ha, Nam Tu Liem District, Hanoi City, Vietnam	+84-24-3937-8075

For Safety : Please read the instruction manual carefully before using the products in this catalog.
Wiring and connection must be done by the person have a specialized knowledge of electric construction and wiring.

eco Changes **for a greener tomorrow**

Eco Changes is the Mitsubishi Electric Group's environmental statement, and expresses the Group's stance on environmental management. Through a wide range of businesses, we are helping contribute to the realization of a sustainable society.

MITSUBISHI ELECTRIC CORPORATION
HEAD OFFICE: TOKYO BUILDING, 2-7-3, MARUNOUCHI, CHIYODA-KU, TOKYO 100-8310, JAPAN

Revised publication, effective Mar. 2018.
Specifications are subject to change without notice.
This pamphlet is made from **recycled paper**.

Y-0777 1803 printed in Japan 〈IP〉